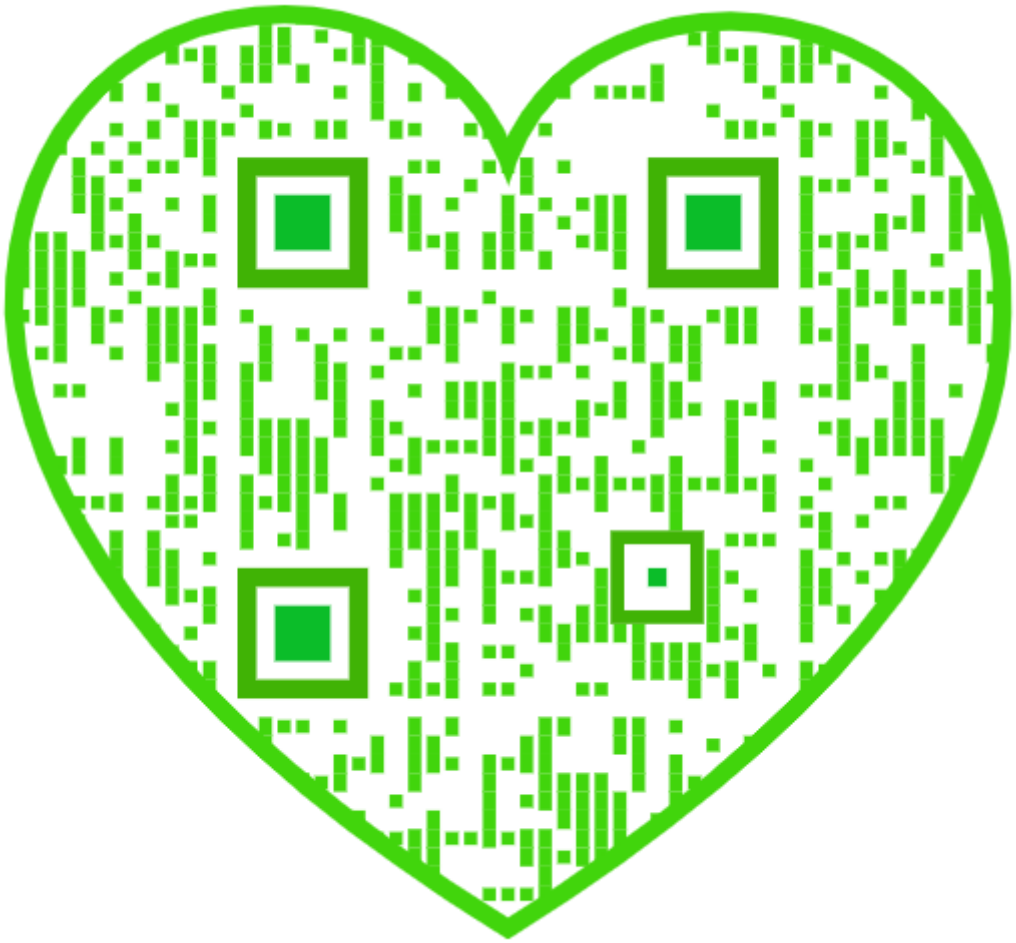

PNEUMATIC TIRES

Automobile, Truck, Airplane Motorcycle, Bicycle

An Encyclopedia of Tire Manufacture, History, Processes, Machinery, Modern Repair and Rebuilding, Patents, Etc., Etc., Profusely Illustrated.

By HENRY C. PEARSON

Editor of THE INDIA RUBBER WORLD

Author of "Crude Rubber and Compounding Ingredients," "Rubber Machinery," "What I Saw in the Tropics," "The Rubber Country of the Amazon," "Rubber Tires and All About Them," Etc., Etc.

Price $12.00

PUBLISHED BY

THE INDIA RUBBER PUBLISHING CO.

25 WEST 45TH STREET

NEW YORK

COPYRIGHT, 1922
By HENRY C. PEARSON
All Rights Reserved

289136
MAR 17 1925
STQ
.P31

645048

FOREWORD

THE hardest problem that ever confronted the rubber trade was the production of a tire that would hold air, in other words, the pneumatic. It was, however, successfully solved. The bicycle and later the automobile resulted from it, and a new industry in rubber was created. Thousands of men and millions of dollars are employed, while as a gage of the world's interest in the subject may be taken the multitude of patents that are granted annually for tires, rims, tools, accessories and machines.

This is not wholly a technical work only describing tire manufacture, as it is written also for the great number of persons whose interest in tires comes from handling, repairing and using them. In a word, it is a record of what has been done in tires from the beginning. It constitutes a notable expansion of a small book on this subject published in 1906, since which time both the manufacture and repair of tires have been revolutionized by new methods, machines and devices.

Much has been written about tires, some of it of the greatest value, some misleading. That the writer of this volume has done better or worse than others is proved or disproved in these pages. At all events he is a practical rubber man, has made tires, and has studied the subject in the leading tire factories in the United States and Europe. In addition to this, as publisher and editor of *The India Rubber World,* he is in a position to secure a large amount of material not accessible to others. He therefore presents this book with confidence that somewhere in its pages will be found matter of value to all who in any way are interested in rubber tires—a subject whose past history has revolutionized the methods of travel and whose future holds almost inexhaustible possibilities.

When the bicycle was the only vehicle, aside from the racing sulky, that used the pneumatic tire the business remained comparatively small. The work was done by hand and methods of manufacture were largely empirical. The automobile, however, gave a marvelous impetus to the industry. Chemists, engineers and experts the world over took hold of the problems of compounding and manufacture with most satisfactory results. Through such organizations as the Society of Automotive Engineers and the United States Bureau

of Standards the work of the various engineers was brought before the manufacturers and most valuable knowledge disseminated. To these and similar associations in the United States and Europe the author acknowledges his indebtedness. Nor would it be fair to ignore the excellent matter relative to tires, fabrics, rims, etc., published in American and European motor papers. Indeed so alert have engineers and editors been that a book of this type is perforce a compilation of facts in many lines, rather than an original creation.

My appreciation is greatfully acknowledged to Phil M. Riley who, with others of my alert and capable staff, helped notably in the preparation of this work.

The size of the American trade in tires is so great and the figures are so constantly augmented that one hesitates to quote, but that a billion dollar tire business is here, is a fact. In other words, with the continually extending use of pleasure cars and commercial motor vehicles this is but the beginning of an era when everyone will be on wheels and everything on wheels will be shod with rubber.

HENRY C. PEARSON.

TABLE OF CONTENTS

CHAPTER I

THEORY OF THE PNEUMATIC TIRE—Just What the Tire Does and Why It Does It. Utilizing Elasticity of Air to Annihilate Vibration. Conditions of Shock Absorbability. Effect of Expansion and Compression. Pneumatics and Road Surfaces. Pneumatic Tire Substitutes. Pliancy a Prime Essential. How Pneumatics Save Power. Non-Skid Treads and Improved Spring Suspensions.....27

CHAPTER II

HISTORY OF THE PNEUMATIC TIRE—The First Patentee. Thomson's "Aerial Wheels." The Macintosh Patent. Dunlop's Entry into the Field. The Welch Patent Fastening. Coincident British and American Invention of Wired Tires. The Bartlett Patent on Beaded Rims. The G. & J. Clincher Tire. The American Single Tube or "Hose Pipe" Tire. Clincher and Straight-Side Tires. The Tillinghast Single Tube Patent. Palmer "All Warp" Tire Fabric. The Thomas Patents. Flat and Ribbed Treads. Taxicab and Public Service Vehicle Tires. Non-Skid Treads. The Bailey "Won't Slip" Pioneer. Rim Development. Improved Tire Machinery and Fabric Looms. Rapid Rise in Mileage and Guarantees. What Cord Construction Has Accomplished. Pneumatics for Freight Carrying. Great Growth of the Truck Industry. Tire Patents in Litigation—Great Britain. The Welch Patent Suits. The "Inextensible Edge." The Dunlop-Moseley Suit. The Dunlop-North British Suit. Other Dunlop Suits. French Decisions. Dunlop Enters the Canadian Field.....34

CHAPTER III

HISTORY OF THE PNEUMATIC TIRE, CONTINUED—The American Tillinghast Suits. The Single Tube Tire Association. United States Rubber Company Acquires Eighteen Subsidiaries. The Tillinghast-Continental Suit. The Rubber Tire Association. European Field Entered. The G. & J. Suits. The Schrader Patent. Midgley Tread Suit. Keaton Tread Suit. Basic Patents Expire. Thropp Mold Suits. State

Core Suit. Seiberling-Stevens-State Tire Building Machine Suits. Tire Inventors Keep Patent Office Busy. Few Patentees Grow Wealthy. Proposed Tire Legislation. Rubber Tires Made Automobile Development Possible. An Equivalent for Fair Roads Everywhere. Tire Quality Average Steadily Rising 56

CHAPTER IV

INDIA RUBBER, WILD AND CULTIVATED—Its Origin as a Tropical Product. How It Is Gathered and Marketed. Sources of Rubber. Trees Not Destroyed in Procuring Rubber. Cultivated Rubber in the Far East. Rubber Is Not Gutta Percha. Synthetic Rubber Not Yet a Price Competitor.....73

CHAPTER V

PRELIMINARIES IN RUBBER MANUFACTURE—General Description of the Factory Processes of Washing and Drying Crude Rubber. Mixing, Making Up and Vulcanizing. Various Divisions of the Rubber Trade. A Modern Tire Plant Layout. Location. Power, Heat and Light. First Floor. Washing Room. Mill and Calendar Room. Hydraulic Plant. Spreader Building. Second Floor. Mold and Core Equipment. Emergency Room. Third Floor. Tube Making Equipment. Progress of Fabric. Routing of Rubber. Outline of Complete Operations. Summary. Preliminaries in Automobile Tire Manufacture. Routing Materials Through the Factory. Factors Governing Tire Costs. Raw Material Cost Accounting. Washers and Washing. Roll Washers. Sheeting Mill. Drying. "Breaking Down." Compounding. Changes Wrought by Vulcanization. The "Pure Gum" Fallacy. Color in Tire Stocks. The Compounding Room. Motor Tire Compounds. Crude Rubber Groups. Compounding Ingredients. Formulae for Tire Compounds. Mixing and Mixing Mills. Mixing the Compound. Seasoning the "Green" Stock.....78

CHAPTER VI

CALENDERS AND CALENDERING—Standard Three-Roll Calender. Sheet Rubber Making. Frictioning Tire Fabric. Skim-Coating or Sheeting. Power Adjustment of Calender Rolls. Multiple Calendering. Kearns Multiple Friction Calender. Seiberling Friction Calender. Attachments for Calenders. Midgley Caliper Gages for Rubberized Fabrics. Cederstrom

Aging Rolls For Friction Fabric. Tyler-Nall Tension Device for Calenders. Universal Tire Machine Drum and Calender Stock Shell. General Electric Automatic Calender Control.118

CHAPTER VII

RUBBER AND GUTTA PERCHA CEMENTS—What Cements Do. Cohesive and Adhesive Attraction. Essentials of Good Seam Construction. Rubber Solutions and Compound Cements. How Cements Are Made. Cement Churns. Power for Churns. Cement Storage. Filling Tubes with Cement. Fire Hazards of Cement Manufacture and Use. Gasoline Storage and Distribution. Fireproof Cement Cans and Cups. Portable Cement Tanks. Applying Cement. U. S. Army Specifications. Vulcanizing Cement. Typical Cement Formulae. Pneumatic Tire Cements. Solid Tire Cements. Leather Tread Cements. Hard Cements for Bicycle Rims. Cycle Tire Repair Cements. Tire Dough and Quick-Drying Cements. Self-Vulcanizing Cements 131

CHAPTER VIII

SPREADERS AND IMPREGNATORS—Applying Rubber to Tire Fabrics. SPREADERS: Hopewell Enclosed Spreader. Burdin Cord Fabric Spreader. Devine Spreading Machine. Turner, Vaughn & Taylor Spreader for Cord Fabric. Soyer Horizontal Spreading Machine. Thoma Calender Spreader. Chapman Electric Neutralizer. FABRIC IMPREGNATING AND DRYING MACHINES: Smith Tire Fabric Impregnator. Destrebats Vacuum Fabric Impregnating Machine. Bataille Drying and Solvent Recovery Apparatus. Subers Fabric Band Stretching and Coating Machine. Carter Tire Fabric Impregnator. Kremer Apparatus for Impregnating Tire Fabrics. Shaw Vacuum Drying, Impregnating and Solvent Recovery Apparatus. Devine Impregnating, Drying and Solvent Recovery Apparatus for Fabrics. Banner Cord Fabric Impregnator. Thropp Machine for Impregnating Tire Fabric. CORD, THREAD AND YARN IMPREGNATING MACHINES: Good Brothers Thread Coating Machine. Reichelt-Helbing-Nienaber Thread Coating Apparatus. Sloper High-Pressure Thread Solutioning Apparatus. Latour-Capelle Thread Coater. Bayne-Subers Thread Coater. Denman Yarn Impregnating Apparatus. Tew Cord Impregnating and Drying Apparatus. Tew Rubberized Hollow Cord Machine. Hoover Cord Impregnating Apparatus 149

CHAPTER IX

PNEUMATIC TIRE FABRICS—Irish Linen the First. The American Cotton Fabric. Substitutes for Cotton Fabrics. Cotton Covered Wire. Asbestos. Hemp and Flax. Fabricless Tire Experiments. Sources of Cotton Supply. Effect of the War. A Southwest Development. Huge American Cotton Consumption for Tires. Various Types of Tire Fabric Weave. Constrictive Fabrics. Square Woven Fabrics. "Crimp." Kinds of Standard Tire Fabric. Building Fabric. Breaker Fabric. Chafing Fabric. Thread Fabric for Beads. Spinning, Weaving and Finishing. TIRE FABRIC LOOMS: Crompton & Knowles Automatic Loom. Park & Woolson Machine for Trade-Marking Fabrics. Doughty Fabric Strip Loom. Lake Fabric Band Machine. TUBULAR FABRIC MACHINES: De Laski Circular Loom. Subers Tire Casing Machine. De Leeuw Circular Braider. Dickinson Tubular Fabric Loom. Subers Fabric Strip Machine. Subers Fabric Band Covering Machine. Dunkerly-Arnold Braiding Machine. ANNULAR CORD FABRIC TIRE CARCASS MACHINES: Fisher Fabric Braiding Machine. Langer Tire Fabric Loom 171

CHAPTER X

PNEUMATIC TIRE FABRICS, CONTINUED—TESTING TIRE FABRICS: Guarding Against Irregularities. Two Classes of Fabric Tests. Standard Testing Methods. United States Bureau of Standards Methods. Moisture Increases Tensile Strength. TESTING INSTRUMENTS AND DEVICES: Types of Testing Machines. Avery Fabric Tester. Schopper Fabric Tester. Standardization of Testing Machines. Bureau of Standards Testing Machine Head. Scott Horizontal Fabric Tester. Crimp Tester for Warp and Filler Threads. Gadsby-Walen Crimp Tester. Scott Hand Operated Cloth and Rubber Tester. Scott Single Strand Testing Machines. Scott Autographic Testing Machine. Scott Combination Fabric, Cord and Rubber Tester. Suter Automatic Strength and Elasticity Tester. Suter Yarn Twist Tester. Lowinson Yarn and Cloth Quadrant. Jury Autographic Fabric Testing Machine. Lowinson Thread Counting Micrometer. PREPARING AND HANDLING FABRICS: Curtis & Marble Cloth Inspector. Parks & Woolson Fabric Inspecting Machine. Farrel Six-Roll Dryer. Cell Drying Machine. Heath Vertical Brusher. Curtis & Marble Rolls for Removing

wrinkles from Fabrics. Parks & Woolson Standard Cloth Measurer. United Electric Tire Fabric Cleaning Machine. Birch Cloth Stretcher 200

CHAPTER XI

CORD TIRE FABRICS AND CORD TIRES—Increasing Use of Cord Tires for Large Cars. Peeler Cotton for Small Cord Tires. Cabled and Thread or Cord Fabric Tires. Cord Tires Reduce Average Tire Bills 50 Per Cent. Disadvantage of Fabric Tires. Poor Resilience. Flexing Breaks the Fabric. Separation of Plies. Moisture Permeates the Carcass. Advantages of Cord Tires. The Balanced Tire. Greater Flexibility and Resilience. Even Tension and Little Frictional Heat. Better Resistance to Punctures and Stone Bruises. Greater Buoyancy. Larger Cross Section and Lower Inflation. History of Cord Tires. Palmer and G. & J. Thread Fabrics. Palmer Cord Tire. Silvertown Cord Tire. Carlisle Cord Tire. Miller Cord Tire. Archer Cord Tire. Dickinson Cord Tire. Dees Cord Tire. Ives Cord Construction. Fisher Cord Tire. Kline Cord Tire. Interlocking Cord Tire. Cord Fabrics. Standard Cord Fabric. Advantages of Cord Fabrics. United States Royal Cord Tire. Goodyear Cord Tire. Subers Cord Fabric. Lister Cord Fabric. Musselman Cord Fabric. Miller Metal Cord Tire. Fabri-Cord Tire 229

CHAPTER XII

CORD TIRE FABRICS AND CORD TIRES, CONTINUED—Development of the Motor Truck. First Equipped with Solid Tires. Spectacular Introduction of Giant Pneumatics. The Akron-Boston Express. Experiments with Six and Eight-Wheel Trucks. Tandem Axle Construction. Dual Pneumatic Tires. Truck Design for Pneumatic Tires. Summary of Pneumatic Tired Truck Accomplishment. Operating Costs. Advantages of Pneumatic Truck Tires. Transportation and Operation Economies. Depreciation of Loads and Roads. Cost of Pneumatic Tire Equipment. Practicability of Pneumatic Truck Tires. Development of the Pneumatic Truck Tire. Large Cord Construction. Sizes and Capacity. Loads and Inflation. Factors Governing Change-Overs from Solid to Pneumatic Tires. Tire Equipment Depends on Truck Service Capability. Mounting Pneumatic Truck Tires. Inner Tubes, Flaps and Valves. Cord Tires for Airplanes. S. A. E. Specifications for Airplane Tires. Government Specifications for Cord Tires.....247

CHAPTER XIII

BIAS FABRICS—Cutting Bias Fabric Strips. Jappe Elastic Fabric for Tire Building. BIAS FABRIC CUTTERS: Schofield Bias Fabric Shear. Gordon-Birmingham Bias Fabric Cutting Machine. Bolton Vertical Bias Fabric Cutter. Stevens Bias Cutter Take-Up. Neal Bias Fabric Reeling Machine. Nall Take-Off Reel. Bridge Fabric Stretching Machine. BIAS FABRIC LOOMS AND MACHINES: Henderson-Mahon Diagonal Weft Loom. Trautvetter Bias Fabric Loom. Herzog Bias Fabric Machine 279

CHAPTER XIV

TREAD MAKING AND APPLYING MACHINERY—Smooth Treads. Anti-Skid Treads. RUBBER STRIP CUTTERS: Sweeney Rubber Strip Cutter. Jelly-Hubbard Strip Cutter and Tread Trimmer. TREAD BUILDING MACHINES: Pfister-Addyman Strip Cutter and Joiner. Crook Tread-Building Machine. Birmingham Tread Machine. Gordon Tread Strip Building Machine. TIRE TREAD CALENDERS: Troester Tire Tread Calender. Olier Tire Tread Calender. Kearns Calender for Tire Tread Stock. Hanna Calender for Forming and Joining Rubber Sheets. TREAD APPLYING MACHINES: Eccles Tread Applying Machine. Williams Tire Tread Applying Machine. Hoyt Tire Tread Centralizing Device. Brucker Tire Tread Rolling Device. Hibner Tread Cementing Machine. Thompson Tread Handling Device. "Energized" Tire Machinery. Blaisdell Abrading Machine. Blaisdell Rubber Strip Winding Machine. MACHINERY FOR MAKING ARMORED TIRES: Gautier Armored Tire Building Machine. A German Tread Riveting Machine. Frost Leather-to-Rubber Vulcanizer. Rousillon Wire Winding Machine. Atlas Metal Disk Feeding Machine. Wadsworth Wire Spiral Machine for Tire Treads. Henry Wired Tread Making Machine. Dunlop-Keegan Stud Applying Machine. Turpin-Snodgrass Tire Tread Studding Machine. Gottwals Armor-Applying Machine. Stimson Machine for Applying Split Rivets to Treads 291

CHAPTER XV

BEAD MAKING AND APPLYING MACHINERY—Manufacture of Tire Beads. Types of Beads. Regular Clincher Bead. Quick Detachable Bead. Straight-Side Detachable Bead. Braided Bead Wire. Making Braided Wire Beads. Pratt Cable Bead. Building Cable Beads Into Tires. BEAD MAKING MACHINES:

Johnstone String Bead Core Forming Machine. Seiberling-State Bead Mold. Tyler-Nall Tire Bead Machine. Gammeter Tire Bead Forming and Covering Apparatus. Stevens Bead Forming Machine. Stevens Bead Fabric Tearing Device. Gillette Wire Bead Core Making Machine. Brucker Bead Wire Forming Machine. Kremer Bead Wrapping Machine. Midgley Bead Wrapping Machine. Kuentzel Bead Forming Machine. Southwark Goose Neck Tire Bead Press. Southwark Quick Acting Tire Bead Press. McNeill Bead Drying Apparatus. Meir Bead Trimmer. Midgley Tire Bead Trimming Machine. Midgley Bead Cleaning Machine. Bridgewater Tire-Bead Trimmer. BEAD APPLYING MACHINES: Thropp Bead Adjusting Device. Gammeter Bead Centering Device 312

CHAPTER XVI

BUILDING AND VULCANIZING CORES—Thropp Tire Core. Thropp Improved Collapsible Core. Young Removable Core. State Collapsible Core. Stiles-Yemiker Collapsible Core. Childs Collapsible Core. Hinman Collapsible Core. Y. S. K. Collapsible Core. Duplex Collapsible Core. Welton Interlocking Collapsible Core. Simplex Collapsible Core. Kuhlke Collapsible Core. Mather Collapsible Core. Adamson Collapsible Cores. Coleman Collapsible Core. Naylor Collapsible Core. Horton-Wagner Collapsible Core. Bacher Collapsible Core. Kuhlke Collapsible Core Locking Device. Chalfant-Haun Sheet Metal Collapsible Core. Welton Collapsible Core. Midgley Collapsible Core. Cole Collapsible Core. Wood-Milne Collapsible Core. De Mattia Collapsible Tire Building Form. INTERNAL PRESSURE CORES: Gray Expansible Mandrel and Mold. Dees Collapsible Fluid Pressure Core. Dees Mechanical Pressure Core. Johnson-Gammeter Vulcanizing Bag. Denman Collapsible Fluid Pressure Core. Gammeter Internal Pressure Core. Cobb Collapsible Fluid Pressure Core. McLeod Internal Pressure Tire Vulcanizing Bag. Gummer Expansible Mandrel. RINGS, FLANGES, PADS AND MACHINES FOR CORES: Rowley Cloth Wrapping Compression Rings. Stultz Tire Building Flanges. Semple Collapsible Core with Non-Metallic Pads. Darrow Non-Metallic Annular Tire Core Pads. Grosvenor Lifting Tongs for Tire Cores. Gillette Sectional Tire Core Remover. Stevens Machine for Applying Bead-Clamping Rings. CORE CLEANING MACHINES: Killian

Tire Core Cleaner. Gammeter Pneumatic Tire Core Revolving Machine. Wheeler Tire Core Cleaning Machine.....330

CHAPTER XVII

TIRE BUILDING STANDS—Early Types: Thropp Stand. Adamson Stand. Williams Stand. Bridge Jack. Iddon Stand. Modern Stands: Akron-Williams Tire Building Stand. Akron Tire Building Stands. Eau Claire Stand. P. I. W. Tire Building Stands. Miller Tire Building Stand. Eau Claire Portable Tire Stand. Champion Tire Building Stands. P. I. W. Tire Finishing Stand. Akron Tire Finishing Stand. Akron-Williams Tire Rebuilding Stands. Akron Treading Stand....357

CHAPTER XVIII

TIRE MOLDS—Internal Pressure Molds: Johnstone Internal Pressure Mold. McLeod Internal Pressure Mold. Dees-Mc-Leod Internal Pressure Mold. Dees Internal Pressure Mold. Swinehart Internal Pressure Mold. Batcheller Internal Pressure Mold. Pfeiffer Self-Contained Tire Vulcanizing Mold. Midgley Vulcanizing Jacket. Williams Open Cure Mold. Robbins Open Cure Tire Mold. Hopkinson-Midgley Ring Molds. Satterthwaite Fabric Pad Molds. Tew Shield for Vulcanizing Molds. Byrne Mold. Robbins Hydraulic Pressure Mold. Price Electric Tire Mold. Swinehart Tire Mold. Tread Molds: Macbeth-Dunlop Tread Mold and Press. Gorton Endless Tread Band Molds. Nall Non-Skid Tread Band Mold and Press. Thropp Tread Mold. Olier Tread Mold. Adamson Tread Mold. Non-Skid Tread Molds: Ramsbottom-Turner Tread Formers for Molds. Finlayson Non-Skid Mold. Sloper Non-Skid Tread Mold. Hauvette Mold for Non-Skid or Plain Tread Tires. Studded Tread Molds: Internal Pressure Studded Tread Molds. Whitehead Studded Tread Mold. Leather Tread Molds: Stock-Bell Leather Tire Cover Mold. Bell Mold for Leather Tire Casings. Miscellaneous Mold Equipment: S. & B. Flexible Steel Molds. Southwark Forged Steel Tire Molds. A. B. Cillium Metal Alloy for Tire Molds. Aluminum Molds and Branding Plates. Gorton Engraving Machine for Non-Skid Tread Molds. Wheeler Tire Mold Cleaning Machine. Duncan Overhead Carriers. Myers Tire Mold Conveying System. Wetter Serial Numbering Machine for Mold Strips. Roovers Embossing Press. Dunlop-Macbeth Mold Opener.....368

CHAPTER XIX

TIRE BUILDING—Building Tire Casings by Hand. Machine Methods of Tire Building. Machine vs. Hand Methods of Tire Building. Various Patented Methods. Laroche, Price, Dickey, Gammeter, Coffey, Brucker and Trump Patents. FABRIC FEEDING, SHAPING, STRETCHING, TENSIONING, ROLLING AND STITCHING DEVICES: Vincent Fabric Shaping and Tensioning Device. Fiedler Fabric Shaping Device. Mathern Tire Smoother. Brucker Fabric Strip Feeder. Gammeter Fabric Feeding Device. Nall Counterweight Tensioning Device. Nall Friction Tensioning Device. McMahan Tensioning Device. Fisher Fabric Stretching Disks. Griffith Mechanical Stitcher. Power Brushes in Tire Manufacture. Machinery. Tube Buffing. Tread Band Buffing. Bead Buffing. Pneumatic Carcass Roughing. Tire Mold and Core Cleaning. Speeds...395

CHAPTER XX

TIRE BUILDING, CONTINUED—TIRE BUILDING MACHINES: Vincent Tire Building Machine. Macintosh Tire Casing Machine. State Tire Shoe Machine. Rowley Tire Building Machine. Mathern Fabric Laying Machine. Crosby Tire Building Machine. Whalen Tire Making Machine. Edmonds Tire Building Machine. Miller Automatic Tire Machine. Bridge Carcass Building Machine. Doughty Combined Calender and Building Machine. Converse-Kress Tire Building Machine. Dew Tire Building Machine. Thropp-De Laski Tire Making Machine. Stevens Tire Casing Machine. Lister Tire Building Machine. Paridon Tire Building Machine. Kremer Fabric-Shaping Tire Building Machine. Kremer Fabric-Tensioning Tire Building Machine. Avon Tire Building Machine. Kremer Tire Building and Stitching Device. Fisher-Price Tire Building Machine. Knight Tire Building Machine. Hermann Tire Building Machines. Mathern Improved Tire Making Machine. Schaffer Tire Building Machine and Loom. Banner Machine for Building Casings and Tubes. Banner Improved Tire Building Machine. American Pneumatic Chucks for Tire Building Machines.....410

CHAPTER XXI

CLOTH WRAPPING MACHINES—Decauville Cloth Wrapping Machine. Miller Wrapping Machines. Raber Wrapping and Unwrapping Machine. Williams Cloth Wrapping Machine.

Bridge "Open Gap" Endless Wrapping Machine. DeLaski-Thropp Wrapping and Unwrapping Machine. Olier "Open Gap" Cloth Wrapping Machine. Olier Wrapping and Unwrapping Machine. Bridge Cloth Wrapping Machine. Thropp Wrapping and Unwrapping Machine. Nuttall-Bridge Cloth Wrapping Machine. Midgley Cloth Wrapping Machine. Stevens Portable Cloth Wrapping Machine. BOBBIN WINDERS: Thropp Bobbin Winder. Bridge Duplex Bandage Wrapping Machine. COMBINED CLOTH AND PAPER WRAPPING MACHINES: Kuentzel Tire Wrapping Machine. Welton Tire Wrapping Machine 443

CHAPTER XXII

CORD TIRE MANUFACTURING MACHINERY.—CORD FORMING MACHINES: Sloper Cord Twisting Machine. Sloper Cabling Machine. Sloper Cord Flattening Machine. Sloper Rewinding Machine. Gray-Sloper Cord Tape Forming Machine. Tew Flat Tubular Cord Machine. CORD TIRE CARCASS LAYING MACHINES: Swain Cord Laying Machine. Swain Improved Cord Laying Machine. Palmer Cord Laying Machine. Silvertown Cord Laying Machine. Bayne-Subers Tire Winding Machine. Hyatt Endless Cord Fabric Machine. Bane-Meredith Tire Winding Machine. Harris Cord Wrapping Machine. Dees Cord Laying Machine. Coesir Cord or Strip Wrapping Machine. Denman Tire Winding Machine. McLeod Cord Carcass Laying Apparatus. Kline Tire Cording Machine. Dickinson Automatic Cord Tire Building Machine. Apparatus for Making Carlisle Cord Tires. CORD FABRIC MAKING AND COATING MACHINES: Bourdin Weftless Fabric Loom. Pye Cord Fabric Machine. Seiberling Cord Fabric Strip Machine. Marquette Cord Covering and Cord Fabric Machine. TUBULAR CORD FABRIC MACHINES: Bayne-Subers Tire Casing Machine. Subers Automatic Tubular Fabric Machine. MISCELLANEOUS CORD TIRE MACHINERY: Sloper Cord Tire Core. Sloper Improved Cord Tire Core. Hubbard Cord Measuring Device. Stowe Core and Anchorage for Cords of Cord Tires. Tew Cord Tire Carcass Form 459

CHAPTER XXIII

VULCANIZERS AND PRESSES—Shaw Heater Press. Shaw Double-Ram Heater Press. Decauville Heater Press. Farrell Heater Press. Allen Heater Press. Allen Quick Opening Heater

Press. Akron-Williams Heater Press. Improved Akron-Williams Heater Press. Gammeter Single Ram Heater Press. Beer Quick-Acting Heater Press. Dees Heater Press for Internal Pressure Molds. Dees Heater Press for Expansible Cores. Adamson Heater Press. Welton Heater Press. McLeod Heater Press for Internal Pressure Molds. Nuttall-Bridge Ramless Heater Press. Thropp Heater Press. Southwark Heater Presses. Lauritzen Heater Press. Akron Heater Press. MOLDING AND VULCANIZING PRESSES: Vincent Vulcanizing Press. Wolber Press Vulcanizer. Doughty Press Vulcanizer. Seiberling Multiple Platen Press. Wood Mold Closing Press. Southwark Mold Closing Press. Taylor Tire Molding Press. Coffey Tire Molding Press. W-S-M Hydraulic Rimming Press. Southwark Rimming Press. HORIZONTAL VULCANIZERS: Seabury Vulcanizer. Gammeter Horizontal Press Vulcanizer. McLeod Horizontal Vulcanizer. QUICK-OPERATING VULCANIZER DOORS: Adamson Self-Sealing Door. Williams Boltless Quick-Opening Vulcanizer Door. A German Hydraulic Door Closing Device. Shaw Door Lock. Bridge "Akron-Williams" Door. Allen Quick-Opening Door. Barder Vulcanizer Door. Southwark Quick-Opening Vulcanizer Door. Simplex Quick-Opening Vulcanizer Door. VULCANIZATION CONTROL: Importance of Uniform Temperature and Dry Steam. Necessity of Gradual Increase in Temperature. Automatic Control of Vulcanization. Steam Control. Charting the Cure. CONTROL DEVICES: Tagliabue Control System. Stratton Steam Separator. Fisher Reducing Valve or Pressure Regulator. H. & M. Thermometers. Brown Vulcanizer Recording Thermometer. Bristol Recording Gages. Edson Recording and Alarm Gage. Powers Temperature Regulators. Honeco Vulcanizer Temperature Controller. Hydraulic Accumulator System. VULCANIZING THE CASING: Wrapped and Molded Tires. Single and Double Cure....487

CHAPTER XXIV

TIRE FINISHING MACHINERY—Tire Finishing, Inspection and Wrapping. Stevens Portable Buffer. Akron Tire Buffing and Cleaning Machine. Haskins Rubber Buffing Machine. Stevens-Steele Tire Stripping Machine. Hoyt Tire Inspecting Machine. Robertson Tire Casing Inspecting Machine. Andrus Vulcanizer for Factory Damaged Goods. Zimmerman Tire

Painting Machine. Sprayco Tire Casing Painter. Hammel Tire Coating Machine. Chatillon Scale. Toledo Tire Scale. Peerless Tire Section Cutter. Carll Steel Tire Racks. PAPER CUTTERS, WINDERS AND WRAPPERS: Thordarson's Paper Strip Cutter and Winder. Langston Paper Slitter and Rewinder. Pierce Paper Wrapping Machine. Pierce Improved Tire Wrapping Machine. Miller Paper Wrapper. Kuentzel Paper Wrapper. Terkelsen & Wennberg Paper Wrapping Machine. Terkelsen & Wennberg Paper and Burlap Wrapper. Midgley Paper Wrapping Machine. Dubey Paper Wrapper for Tires. "Safepack Krepekraft" for Wrapping Tires.....541

CHAPTER XXV

TIRE FILLERS—Advantages and Disadvantages. Liquid Fillers. How Tires are Filled. Filling Devices. Liquid Fillers on the Market. Solid Fillers. Solid Fillers on the Market. Inner Tires and Cushions. Sponge Rubber Fillers. Cork Fillers. Formulae for Tire Fillers. Cost per Tire for Filling.....560

CHAPTER XXVI

FLAPS, RELINERS AND BLOW-OUT PATCHES—Stevens Tire Flap Making Machine. Sloper Expanding Tire Liner Mold. Marshall Tire Flap Vulcanizer. Midgley Tire Flap Trimmer. Dykes Reliner Mold and Vulcanizer. Springer Molding Machine for Reliners. Western Reliner Skiving Machine. The Manufacture of Tire Flaps. Hand-Made Flaps. Machine-Made Flaps. Flap Building Machine. Process of Building Flaps. Curing Drum. Construction. Material for Flaps. The Manufacture of Blow-Out Patches. Materials and Rubber Compound. Calendering. Cutting. Assembling. Vulcanizing 579

CHAPTER XXVII

TIRE TESTS AND TESTING MACHINES—Road Tests. The Pirelli Tests. Tests for Electric Vehicle Tires. Jumping Tests for Truck Tires. Racing Tests. Factors Influencing Road Tests. Shop Tests. Tire Factory Laboratory Organization. Testing Division. Factory Control Division. THICKNESS GAGES: Ames Rubber Thickness Gage. Randall & Stickney Thickness Gage. Ames Pocket Thickness Gage. Superior Leather Gage. Development Division. Compounding Department. RUBBER TESTING MACHINES: Pendulum Type Testing

Machine. Shore Scleroscope. Widney Resiliometer. Jolly Spiral Spring Balance. Research Department. Manufacturing Laboratory. Commercial Division. The Technical Manager. TIRE TESTING MACHINES: The Pulley Tire Testing Machine. Thropp Tire Tester. Palmer Tire Tester. Veritas Road Belt. Gates Tire Testing Track. Duryea Resiliometer. A British Resiliometer. Palmer Resiliometer. Michelin Comparison of Pneumatic and Solid Tires. Firestone Testing Dynamometer. Measuring Valve Leakage.....590

CHAPTER XXVIII

TIRE SIZES AND INFLATION—Practical Sizes from an Economical Standpoint. Economy of Larger Wheels. Air Pressure Strain on Large and Small Tires. Tire Load. Stress Under which Tires Work. Heat Within the Tire. Tire Load Capacity Tables. Inflation. Facts About Heating. Inflation Tables. The Oversize Feature of Cord Tires. S. A. E. Inflation Recommendations. Oversize Tires. Different Sizes on Front and Rear Wheels. Tires and Their Oversizes. Tire Standardization. Elimination of Unnecessary Sizes. S. A. E. Tire Standards. Tires and Rims for Passenger and Commercial Vehicles. Current Considerations. Solid and Pneumatic Tire Equipment for Commercial Vehicles. Tire Standardization in Europe. French or Metric Tire Sizes. British Standards. British Commercial Vehicle Tires. European Tire Dimension Anomalies 619

CHAPTER XXIX

BICYCLE TIRES IN GENERAL—History of the Bicycle Tire. Sparrow's Place in the Trade. British Pneumatics. America Late in the Field. The Single Tube Tire in America. Puncture-Proof Bicycle Tires. Increasing Popularity of Cycling. Motorcycle Tires. Principal Stock Sizes. S. A. E. Standardization. Development of the Airplane Tire.....646

CHAPTER XXX

THE MANUFACTURE OF BICYCLE AND MOTORCYCLE TIRES—BICYCLE TIRES: A Brief Summary of Methods and Materials. Single Tube Bicycle Tires. Building Up by the Pole Method. Joining the Ends. Valving. Molding. Test-

ing. Forming the Air Tube Separately. Building Up by the Drum Method. Cord Bicycle Tires. Molding Air Nipples. Double Tube Bicycle Tires. Dunlop Bicycle Tire. Clincher Type Bicycle Tire. Split Laced Bicycle Tire. Government Bicycle Tire Specifications. Motorcycle Tires. Government Motorcycle Tire Specifications. Bicycle Tire Compounds. Vulcanization of Bicycle Tires.....660

CHAPTER XXXI

BICYCLE TIRE MAKING MACHINERY—BICYCLE TIRE BUILDING MACHINES: Forsyth Endless Tire Wrapping Apparatus. Huestis Thread Laying Machine. Seiberling Cycle Tire Wrapping Machine. Gray Endless Tire Wrapping Machine. Dessau Cycle Tire Building Machine. Smith Cycle Tire Building Machine. Hubbard Cycle Tire Building Apparatus. Eccles Side Wire Machine. Nivet-Haegg Bicycle Tire Machine. Bowerman Bicycle Tire Machine. BICYCLE TIRE CORES AND MANDRELS: Morgan & Wright Core. Holmes Mandrel. Hubbard Expanding Mandrel. Gleason Fusible Core. BICYCLE TIRE VULCANIZING MOLDS: Moomy Mold. Sherbondy Mold. Cowen Mold. Bert Mold. Fawkes Mold. NEST MOLDS: Rath Nest Mold. Heywood Nest Mold. Waddington Nest Mold. Williams Nest Mold. Thompson Nest Mold. BICYCLE TIRE PRESS VULCANIZERS: Doughty Press Former and Vulcanizer. Doughty Hydraulic Press Vulcanizer and Mold. Doughty Collapsible Hand Press Vulcanizer. Doughty Expansible Mold and Press Vulcanizer. Hardy Press Vulcanizer. Doughty Tube Vulcanizing Press. Adamson Mold Press Vulcanizer. Shaw Press Vulcanizer. MISCELLANEOUS BICYCLE TIRE MACHINERY: Steel Drums for Treads. Bridge Profiling Calender. Wright-Parker Perforating Machine. Ellinwood Air Expeller.....680

CHAPTER XXXII

INNER TUBES—Theory of the Inner Tube. Butt-Ended Tubes. "Puncture Proof" Inner Tubes. Multiple Inner Tubes. Reinforced Inner Tubes. Leather and Gut Inner Tubes. Self-Healing Inner Tubes. Self-Inflating Inner Tubes. Inner Tubes for Cord Tires. MANUFACTURE OF INNER TUBES: Inner Tube Compounds. Types of Inner Tubes. Tubing Machine Tubes. Seamed or Laminated Tubes. Rolled Tubes. Methods of Vulcanizing. Valving Tubes. Splicing. Testing and In-

spection. Women in Inner Tube Making. Variations in Inner Tube Sizes. United States Government Specifications....706

CHAPTER XXXIII

MACHINERY FOR MAKING INNER TUBES—TUBING MACHINES FOR INNER TUBES: Standard Tubing Machines. Royle Tubing Machine. Dunlop-Macbeth Inner Tube Machine. RUBBER STRIP CUTTERS: Quinn Inner Tube Strip Cutter. Pfister-Addyman Strip Cutter. Nall-Tyler Strip Cutter and Skiver. Cameron Slitting and Rewinding Machine. INNER TUBE FORMING AND ROLLING MACHINES: Work Inner Tube Machine. Bowden Tube Making Machine. Ellinwood-Miller Inner Tube Machine. Doughty Inner Tube Machine. Rucker Thread Winding Machine. Bridge Inner Tube Machine. Kremer Inner Tube Machine. Current Inner Tube Rolling Machine. Gammeter Inner Tube Machine. Fenton Inner Tube Rolling Machine. Nall Inner Tube Machine. Whitsaman Rolling Table. Tyler-Goodyear Inner Tube Machine. Roberts Tube Molding and Vulcanizing Apparatus. INNER TUBE POLES AND MANDRELS: Aluminum Mandrels. Republic Circular Mandrel. Republic Mandrel. Brown Mandrel. Foutts Mandrel. Sherardizing Steel Inner Tube Poles. S. & W. Glass Poles. DEVICES FOR INSERTING AND REMOVING MANDRELS AND REVERSING TUBES: Miller Mandrel Inserting Machine. Removing and Reversing Tubes. Morgan Tube Turning Device. INNER TUBE WRAPPING AND UNWRAPPING MACHINES: Akron Inner Tube Wrapping Machine. Akron-Williams Inner Tube Wrapping Lathe. Bridge Inner Tube Wrappers. Vey Inner Tube Wrapper. Zwisler Inner Tube Wrapper. Akron-Williams Rag Roller. Allen Rag Roller. Ross Inner Tube Unwrapping Machine. INNER TUBE VULCANIZERS: Biggs Inner Tube Vulcanizer. Biggs Built-In Tube Vulcanizer. INNER TUBE VULCANIZING SHELLS, MOLDS AND PRESSES: Young Inner Tube Vulcanizing Shell. Moseley Inner Tube Former. Dunlop-Macbeth Inner Tube Vulcanizing Mold. Bert Inner Tube Vulcanizing Mold. Wick Inner Tube Vulcanizing Mold. Nall Multiple Butt-End Vulcanizing Press. INNER TUBE BEVELING AND SKIVING MACHINES: Olier Beveling Machine. Bridge Beveling Machine. Allen Skiver. Hirth-Merkle Skiver. INNER TUBE SPLICING MANDRELS AND VULCANIZERS: Miniszewski-Printz

Mandrel. Inner Tube Splicing Mandrel. Chamberlain Inner Tube Splicing Mandrel. Lee Inner Tube Splicing Mandrel. Allen Inner Tube Splice Vulcanizer. "H. F." Jointless Joiner. Angelican-Robinson Inner Tube Splicing Mandrel. Van Note Inner Tube Splicing Machine. Kremer Inner Tube Splicer. Allen Expanding Core Inner Tube Splice Vulcanizer. Hall Inner Tube Splicing Mandrel. Lowe Inner Tube Splicing Mandrel. MISCELLANEOUS INNER TUBE MACHINERY: Gillette Inner Tube Valve Nut Tightener. Sarco Transfer-Printing on Inner Tubes. McClenathen Inner Tube Deflator.....736

CHAPTER XXXIV

TIRE RIMS AND FASTENINGS—Early Rim Design and Patents. Dunlop-Welch Hollow Center Rim. The Clincher Rim. The Bartlett Rim. The G. & J. Rim. Mechanical Fastenings. The Trend of Rim Design. Demountable Clincher Rims. Split Demountable Clincher Rims. Straight-Side Split Demountable Rims. Quick Detachable Rims. Quick Detachable Rims for Wire Wheels. Quick Detachable Demountable Rims for Wire Wheels. Quick Detachable Demountable Rims. Demountable Rims for Truck Tires. Flanged Steel Rims to Fit Railway Tracks. Applying Truck Tires to Rims. Demountable Wheels. "Spare" Wheels. Special Rims and Wood Wheels. Rim Patent Litigation. Rim Standardization. Airplane Landing Wheel Rims. S. A. E. Standards. British Rim Standardization 787

CHAPTER XXXV

THE TIRE PUMP—Emergency Pumps. Foot-Operated Pumps, Compound Hand Pumps. Garage Hand Pumps. Engine-Driven Pumps. Spark Plug Pumps. Automatic Tire Sustaining Pumps. Hub Operated Pumps. Garage and Repair Shop Pumps. Pressure Indicators and Regulators. Pump Connection Pressure Gages. Pump and Air Line Connections. Air Bottles. Gas Inflation of Tires.....858

CHAPTER XXXVI

VALVES FOR PNEUMATIC TIRES—Early Bicycle Tire Valves. Valve Troubles. Typical Automobile Tire Valve Description. Valveless Tires. Schrader Valves. Other Valves. European Valve Equipment. Springless Tire Valves. Pressure Indicating Tire Valves. Over-Inflation Release Valves. Deflation Signals. Concerning Tire Valve Leaks. Valve Accessories.887

CHAPTER XXXVII

TIRE TOOLS AND ACCESSORIES—Tire Holders. Tire Covers. Tire Trunks. Tire Tools. Rim Contractors. Jacks. Blow-Out Patches. Sleeves for Inner Tubes. Tire Boots. Tire Armor and Blow-Out Chains. Reliners. Tire Protectors. Pressure Gages. Tire Alarms. Puncture Finders. Mud Splash Guards. Miscellaneous Accessories.....911

CHAPTER XXXVIII

TREADS AND ANTI-SKIDDING DEVICES—Bicycle and Motorcycle Anti-Skid Tires. Functions of Automobile Anti-Skid Treads. The Development of Automobile Anti-Skids. Classes of Anti-Slipping Devices. Non-Skid Rubber Tires. Principal Tire Tread Designs. Rubber Tire Protection. Detachable Anti-Skids. Studded Leather Treads. Studded Rubber Treads. Steel Tire Protectors. Fabric and Fiber Treads. Anti-Skidding Chains. Weed Chain Tire Grips. Cross Shoe Chains. Sectional Chains. Mud Hooks. Tire Chain Tools. Puncture Proof Tires.....945

CHAPTER XXXIX

THE CARE OF TIRES—Storage by Dealer and User. Natural Enemies of Rubber and Fabric. Protection of Tires in Storage. Care of Tires in Winter. Selection, Mounting and Fitting. Proper Maintenance. Inflation. Alinement of Wheels. Proper Use of Chains. Prompt Repairs. Interchanging Tires. Careful Driving. The Care of Inner Tubes. Commonly Neglected Injuries 998

CHAPTER XL

INNER TUBE REPAIR—ROAD REPAIRS: Valve Troubles. Removing Tires and Locating Leaks. Quick Repair Devices for Ordinary Punctures. Inner Tube Patches. Emergency Vulcanizers. Steam Vulcanizers. Gasoline and Alcohol Vulcanizers. Combustible Disk Vulcanizers. Electric Vulcanizers. The Cold Cure. Plug Repairs for Inner Tubes. Inner Tube Mastics. Cementless Patches. United States Government

Inner Tube Repair Specifications. PERMANENT INNER TUBE REPAIRS: Punctures and Cuts. Splicing Inner Tubes. Applying Valve Bases.....1017

CHAPTER XLI

FABRIC TIRE REPAIR—The Business of Repairing Tires. Tire Repair Schools. PREVENTIVE MEASURES: Plastics for Casing Cuts. Rubber Preservatives. Tire Saver and Repair Kits. Tire Plasters. ROAD REPAIRS: Blow-Out Patches. PERMANENT TIRE CASING REPAIRS: Repairing Treads. Mending Sand Boils. Mending the Fabric. Stepped-Out Repairs. Inside Fabric Repairs. Repairing a Small Blow-Out. Sectional Repairs for Blow-Outs. Non-Skid Designs on Sectional Repairs. Repairing a Large Blow-Out. Strengthening Rim Cuts. Relining. Vulcanizing Fabric Repairs. Practical Vulcanization Hints. Tips to Tire Repair Men. United States Government Standard Specifications for Automobile Tire Accessories and Repair Materials for Pneumatic Tires 1035

CHAPTER XLII

RETREADING TIRES—A Great New Indispensible Industry. Importance of Good Standard Materials. "Available" Tires. Retreading Technique. Four Methods of Retreading. Cutting Down and Building Up. Applying "Camel Back" and Retread Bands. Gates Half-Sole Repair Tires. Blue-Flame Repairs. Retreading Vulcanizer 1061

CHAPTER XLIII

CORD TIRE REPAIR—Cord Fabric Tire Repairs. Cutting Back the Tread. Stepping Down the Fabric. Building Up. Cable Cord Tire Repairs. Removing and Inserting Cord Sections. United States Government Fabric Cord Patch Specifications. Pressure and Curing Hints. Cord Tire Repair Patches..1066

CHAPTER XLIV

TIRE REBUILDING—Sources of Material. A Growing Essential Business. Selecting Tires for Rebuilding. Typical Method of Rebuilding Tires. Tearing Down. Rebuilding. Removing the Tread. Repairing the Carcass. Relining. Buffing. Recovering. Retreading. Building-Up and Applying

the Tread. "Camel Back" Tread Gum. Curing Rebuilt Tires. Endless Retread Bands 1072

CHAPTER XLV

BICYCLE TIRE REPAIR — Punctures in Single-Tube Tires. Plug Repairs. Cuts in Single-Tube Tires. Cuts in Double-Tube Bicycle Casings. Puncture Fluids and Self-Healing Devices. Claims Made by Manufacturers. How Puncture Fluids are Put Up and Applied. Cost per Tire. Typical Puncture Fluid Mixtures. Glucose and Pyroxylin Mixtures. Gum and Wax Mixtures. Glycerine Mixtures. Other Mixtures. Self-Healing Tires. Rubber Puncture Fillers. Puncture Repair Preparations 1085

CHAPTER XLVI

REPAIR SHOP MACHINERY AND EQUIPMENT—The Repair shop. Bias Fabric Cutters. Tire Lasts. Tire Building Stands. Kettle Vulcanizers. Horizontal Retreading Vulcanizers. Annular Air Bags, Retreading Coils and Rims. Retread Molds for Ribbed or Non-Skid Treads. Twin Retread Molds. Cavity Retread Molds. Sectional Cavity Vulcanizers. Pneumatic Truck Tire Vulcanizers. Inside Patch Vulcanizers. Steam Curing Bags. Expansible Sectional Mandrels. Sectional Air Bags. Inner Tube Repair Vulcanizers. Vulcanizers for Both Casings and Tubes. Inner Tube Splicers. Power Rag Wrapping Machines. Hand Rag Wrapping Machines. Buffing Stands. Tread Rollers. Boilers and Steam Generators. Sewing and Stapling Machines for Retreading. Miscellaneous Shop Equipment 1099

CHAPTER XLVII

ROADS FOR TIRES—Importance of Roads Underestimated. Enormous American Highway Expansion Necessary. Greatest Progress in England and France. Increased Use the Real Cause of Road Deterioration. Laws to Safeguard Roads and Travel. Weight and Speed Restrictions. Rights and Duties of the Builders and Users of Roads. Improved Roads. The Maysville Road. Crowned, Guttered and Oiled Roads. Separate Roads for Automobiles. Lateral Action of Automobile Wheels on Road Surfaces. Asphalt, Tar and Oil Binders. Sheet Asphalt Pavement. Rubber Pavements. The Huge

American Road Building Program. Lincoln Highway the Model. Studies and Books on Road Building. Impact Tests of Trucks on Roads.....1142

CHAPTER XLVIII

WHAT BECOMES OF WORN-OUT TIRES—Junk Men and Scrap Rubber Dealers. Reclaiming the Rubber and Fabric. Uses and Consumption of Reclaimed Rubber. Reclaiming Processes. New Uses for Solution Reclaim. Solution Reclaiming Processes. Reclaiming Rubber from Leather Treads. Salvaging Road-Worn Tires. Sorting Old Tires. Beading Old Tires. Bead Trimmers. Johnson Bead Trimmer. R. & D. Bead Cutter. Maxwell Bead Trimmer. Starting the Plies. Pulling Fabric Strips. Hibbs Fabric Stripper. Nall Tire Tread Slicing Machine. Stripping Tire Beads. Stripping Bead Fabric. Grades of Salvaged Rubber and Fabric. Preparing Stripped Fabric for Tire Rebuilding. Patented Uses for Pulled Tire Fabric. The Future Outlook.....1156

CHAPTER XLIX

THE TIRE INDUSTRY TODAY—Tires Carry More than Steel Rails. The Growth of the Industry. American Motor Vehicle Registration. American Tire and Tube Production. American Crude Rubber Consumption for Tires. American Tire Demand for Original Equipment. Motor Vehicle Production. Tires in Use in the United States. Consumption of Automobile Tires in 1920. Total American Tire Demand for 1921. The Future American Tire Demand. United States Tire Exports. The Export Outlook. The Foreign Exchange Situation. Tires and Exchange Rates. Competition in Production. Raw Materials. Labor and Wages. Overhead Expenses. Summary. The Remedy. Straight-Side Tires for Foreign Markets. Metric Sizes and Their Equivalents. Foreign Import Duties on Rubber Tires. Truck Trailers. Bus Lines Replacing Trolleys. Tire Prices. Women in Tire Manufacture 1176

CHAPTER L

TIRE MACHINERY PATENTS.....1213

SMOKING LATEX IN THE AMAZON COUNTRY

CHAPTER I

THEORY OF THE PNEUMATIC TIRE

THE demand for greater speed and comfort in vehicular travel in an age marked for its ease loving and labor saving propensities was what brought out the pneumatic tire. All sorts and kinds of carriage springs were adopted and rejected, and finally the endless iron hoop that bound the wheel was supplemented by the rubber tire, solid, cushion and pneumatic.

Utilizing Elasticity of Air to Annihilate Vibration

Of course, the first question to be considered in the demand for comfort is the minimum of vibration. Primacy in this respect is accorded to the pneumatic tire on account of its greater flexibility and resiliency, for a pneumatic tire is practically a vibration annihilator. In order to get the greatest degree of comfort the line of least resistance must be followed, at any rate so far as tires are concerned, and the elasticity of air and its shock-resisting qualities are unchallenged to-day. The disadvantage to be considered is that rubber is the only elastic, air-confining medium at the present time, and it is liable to puncture. As internal pressure is the force used to meet and overcome the external obstacles, it will readily be seen how the principle involved is one that has not up to the present time been improved upon.

Conditions of Shock Absorbability

A pneumatic tire's chief advantage is its ability to absorb small obstructions without raising the center of the wheel. For example, when a pebble or small stone lies in the path of a vehicle equipped with metal tires, the entire weight of the wheel and its load are lifted over the stone, at a great expenditure of motive power, as well as at the price of discomfort. When the same obstacle is encountered by solid rubber tires, the elasticity of the rubber determines the conditions governing loss of force, discomfort, etc., but when the pneumatic passes over the obstruction the loss of energy and unpleasant vibration have been reduced to a minimum. It has simply meant the displacement of the compressed air, for the instant, the combined elasticity of the air and the covering of rubber making this possible. The greater the speed, too, the greater the ease with which the obstruction is overcome, because there is less opportunity for rebound from it. While the pneumatic tire cannot be said to completely absorb even small obstruc-

tions, yet for all practical purposes this is virtually accomplished by the air-inflated wheel band. Indeed, the difference between the height of the center of the wheel above the ground before the tire meets the minor obstacle and when it meets it is practically negligible. Absorbability also is contingent largely on the shape of an obstacle. For instance, a conical or pointed article will be more readily absorbed than a round or flat one. Expert calculations show that tire absorption is subject to three conditions; (1) The height of the obstruction must not be greater than the diameter of the cross section of the tire; (2) the width must not be greater than the width of the deflated tire; and, (3) the length must not be longer than the tangent to the rim of the outside diameter of the tire intercepted by the outside circumference of the tire.

Effect of Expansion and Compression

It requires only a moment's thought to understand why ordinary road obstructions are overcome with an expenditure of energy so trifling. Of course it is a well-known fact that the internal pressure of the pneumatic tire increases in proportion to the load which is to be carried. The total pressure distributed throughout the air chamber of the tire will be equal, on the entire bearing surface in contact with the road, to the total weight of the load divided by the number of wheels. For instance, a 2,000-pound four-wheel car, if it were possible to distribute the weight equally, would make a 500-pound burden on each wheel, and when pumped up sufficiently to support this load with ease, the air cushion would hold the wheel in equilibrium. However, the internal pressure is increased by the flattening of the tread where it comes in contact with the road, but this factor being constant on a smooth road, the only work to be performed by the tire continually is that entailed by the bending of the rubber in the side walls. This is lost energy, but inasmuch as the pressure is constant and the air around the wheel is continuous, the degree of energy thus lost is brought to the lowest possible point. Although air is being constantly displaced, the rapidity with which expansion succeeds compression as the tire makes its revolutions overcomes the effect of the work almost wholly. In the solid tire, work is done by the rubber, its inherent compressibility being constantly tested by repeated compression and expansion and attendant heating. Generation of heat is, of course, another source of lost energy. It is true that on a rough road the obstacles cause increased compression in the air filled tire, but the rapid expansion robs it of its heat, and expansion and compression are again counter-balancing forces.

Pneumatics and Road Surfaces

In the matter of speed the law of least resistance again obtains, and the pneumatic is still in the lead. This must of necessity remain so, for the reason that there can be no perfectly smooth road. Given a roadbed of absolute smoothness and the pneumatic tire would require a greater propelling force than metallic tires, because of reduced friction. Pneumatics are faster because they lower the grade of the roadbed. Any dirt or gravel road surface has a layer of dust, which, though it may seem a trifling consideration, plays its part in the final computation. The constant compression of this layer of dust by the solid tire changes the grade, making a slight but continual rise, this fact, of course, holding good appreciably when a moderate amount of speed is considered. The pneumatic covers so much more road surface at the point of contact by reason of the ease by which it is compressed that it tends to lower the grade. This may be better understood when it is taken into consideration that steel rails require 25 per cent. less force to carry a ton weight, because of their being harder, than iron rails. The rail depression is not noticeable, yet it exists. The same principle holds good in tires over either a smooth or hard surface, and this is especially true of the ordinary pavements, when the tires must sink somewhat into the crevices between the stones.

Pneumatic Tire Substitutes

Theoretically, it would seem that the pneumatic tire is very near perfection. To be sure, the spring wheel is always being considered as a substitute, but if some genius could arise from the ranks of tiredom to provide a delicate, resilient, air confining fabric that would be virtually puncture proof, the problem would be solved and pneumatic tires would demonstrate all that, and more, than theorizing has ever claimed for their supremacy.

Many are seeking for a practical substitute for air in tires, but so far with little success. To be successful it is commonly asserted that they must produce something that has, first, resiliency equal to air, and second, greater service for the cost. They may attain this desideratum either by greater durability at the same cost or the same durability at a lower cost; and, of course, if they can secure both of these considerations—that is, more service with less cost—the solution will be doubly satisfactory.

Pliancy a Prime Essential

It is coming to be realized more and more, however, that the great resiliency of the pneumatic tire must be regarded as a misfortune

as well as a virtue; that in the final analysis pliancy is the prime requisite of tires, resiliency that of the spring suspension of a motor car. The smoother the roadbed the more rigid the tire should be to have maximum power efficiency. But for use on the average highway, pliancy is wanted to absorb shocks quietly and give the springs on the vehicle an opportunity to begin their action, and this necessitates only sufficient resiliency to maintain the shape of the tire.

Duryea and certain other pioneers in automobile manufacture have always contended for maximum resiliency as the measure of tire efficiency. The S. A. E. Standards Committee has rejected this principle, however, and most tire and motor experts agree that resiliency is no true gage for tire efficiency and that power efficiency is no true gage of tire needs.

A writer in THE AUTOMOBILE of July 1, 1915, sums up the matter clearly as follows:

"Power efficiency is determined mainly on smooth roads, in so far as a tire which is not efficient on smooth roads will have a low total efficiency—the smooth-road action of a tire being the fundamental one to which all other action is only spasmodically added—and it is known that the smoother the road the more rigid the tire should be to have power efficiency. Neither pliancy nor resiliency is here wanted. Pliancy is wanted, however, for absorbing shocks and giving vehicle springs time to start their action, as well as for noiselessness. Resiliency, though a prime requisite in stationary (not rotating) vehicle springs, is wanted in tires only to restore the deformed tire to its round shape and only in the degree required for that purpose. All other usefulness of resiliency in tires, to increase power efficiency, is fictitious. The power wasted in flexions is not restored for use in propulsion by a resiliency which restores a tire to its shape with such promptness as to cause a rebounding of the vehicle. Resiliency in tires only keeps the pliancy of the tires operative.

HOW PNEUMATICS SAVE POWER

"In accordance herewith, the requisites for producing power efficiency are rigidity on smooth roads and pliancy for shocks plus a modicum of resiliency to maintain the shape of the tire. These requisites are plainly contradictory and have to be reconciled by compromise, but resiliency plays a subordinate part among them and cannot be the leading aim.

"Necessity is something else. It may be a necessity to use highly resilient materials in order to obtain the pliancy and flexibility that are wanted. The use of compressed air in pneumatic tires is an im-

portant example. It is wonderfully pliant but also so resilient that it reacts at once with full force against any deformation. For its use in tires its resiliency in this degree is unfortunate, as it takes effect in bouncing the wheel back from the very same obstacle which causes a deformation, unless the vehicle speed is high. Now, the question for the maker of solid tires may be said to be just this—where power efficiency to be obtained through the choice of materials is concerned—of finding a material which will act at all speeds as a pneumatic tire acts at vehicle speeds so high that the excessive resiliency of air does no harm, getting no chance for rebound against the ground.

"It is certain that a highly resilient material is not what is intrinsically wanted, as it has the drawback of causing immediate rebound. But whether the high resiliency can be sidetracked in practice is another question. To solve it by assuming that maximum resiliency is a virtue is to make a virtue out of something which has not even been proved to be a necessity.

"On the other hand, it is easily demonstrated that large dimensions offer one safe method for reconciling the conflicting demands in some degree, giving comparative rigidity for smooth roads in conjunction with an acceptable degree of flexibility for absorbing shocks resulting from impacts with relatively small objects.

"The larger the wheel and tire, the smaller the flexion which will produce a considerable contact area for the support of the load and therefore the greater the flexibility which can be allowed tempering the shock.

"It may perhaps be objected that the work involved in the flexion is always determined by the load and should be the same whether the flexion is large or small, but, as the work done also depends on the distance through which the load must act in accomplishing the flexion, it is susceptible of proof that a flexion which may be considered as dropping the load level one-quarter inch (in the case of the large wheel and tire) consumes less power than a flexion caused by the same load but involving a drop of the load level amounting to one full inch.

"The efficiency of pneumatic tires as power savers is probably due mostly to the fact that the compression of the air caused by the load remains constant on smooth roads and consumes no power, the air being merely chased around slowly as flexion of the fabric advances from one point of the casing to the next, while in tires of other kinds all the elastic material must be flexed successively as the wheel revolves. This advantage of the pneumatic tire holds good whether the inflation is high or low. In all cases only the flexion of the fabric makes demands upon the power, except when shocks are received.

"The limits of flexibility in a tire are determined by (1) the need of supporting the load on smooth roads with a minimum of flexion and a minimum of power spent in flexion, (2) the limited dimensions at disposal and (3) the desirability of avoiding heating, wear and deterioration of tire material. The first consideration operates in favor of not giving the tire too much to do but allowing it to transmit the larger portion of the spring work to the vehicle springs. The possibility of overloads also militates against gaging the flexibility so closely that large deformations of tire materials are apt to take place on smooth roads. Durability is here an intricate factor, but resiliency, in needlessly repeating deformations, is against durability."

The unique advantage possessed by the pneumatic tire as a power-saver is attributed to the fact that the air compression due to the load undergoes practically no change on smooth roads and uses up no power, the air being merely pushed around easily as flexion of the casing fabric progresses. In tires of other kinds all the elastic material must be flexed successively with the revolution of the wheel. Only the flexion of the fabric of the pneumatic tire makes any demand upon the power —and that is but slight—except when shocks are encountered. Even this minor drawback may be largely offset or minimized by ample inflation of the air tube and the use of a stouter casing, though with the latter would come a corresponding reduction in resiliency.

While noting the great and universally conceded comfort and efficiency of the pneumatic tire, it must also be remarked that it has shortcomings, too. It is still liable to punctures, blow-outs, rim cuts, and valve leakages. It skids under certain conditions and harms soft roads. Improvements in manufacture, prompted by a healthy trade rivalry, are, however, rapidly correcting the weak points as they are also enhancing the strong features of the indispensable pneumatic.

While the average pneumatic tire is wonderfully pliant it is also so resilient that it causes immediate rebound from any obstacle momentarily deforming it, unless the vehicle speed be great. It becomes apparent, then, that those who seek to improve upon the pneumatic tire must provide something which at all speeds will act as a pneumatic tire does at vehicle speeds so high that the excessive resiliency of air has no opportunity for rebound against the ground.

Non-Skid Treads and Improved Spring Suspensions

During the past few years the increased use of non-skid treads and improvements in spring suspension, notably the long underslung type and the cantilever for small cars, have brought us nearer to a state of perfection. Although amply pliant, heavy non-skids obviously

lack some of the resiliency of the thinner smooth treads, this has been more than compensated by the greater resiliency of the springs. It is not over-presuming to state that these two developments have done much to entrench the pneumatic tire more surely in popular esteem than ever before, for with them there is greater comfort and assurance in riding, tire mileage is increased and the frequency of punctures and blow-outs is greatly lessened.

CHAPTER II

HISTORY OF THE PNEUMATIC TIRE

The First Patentee

IN ANY general history of rubber tires the name of Robert William Thomson deserves prominent mention as the first patentee of such a tire. His patent, issued in England as No. 10,990 of 1845, related to "the application of elastic bearings round the tires of wheels of carriages, rendering their motion easier and diminishing the noise they make while in motion." He suggested using for this purpose "a hollow belt" composed of India rubber and gutta percha, and inflating it with air, "whereby the wheels will at every part of their revolution present a cushion of air to the ground, or rail, or track on which they

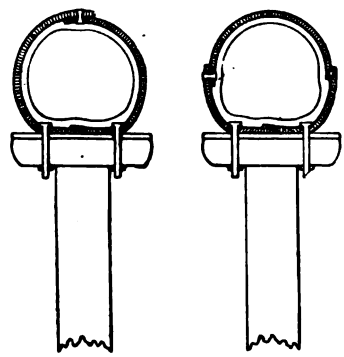

Thomson's Aerial Wheel
[The earliest patented pneumatic tire]

run." This elastic belt, as Thomson called his air tube, he made of several thicknesses of canvas, each saturated with rubber in a state of solution, and laid one upon another, all being cemented together with more rubber solution, after which the tube was vulcanized. Leather was used for the cover, or outer casing, and the tire was inflated with a "condenser" not unlike a modern cycle tire inflator.

Thomson's "Aerial Wheels"

It was the size of Thomson's tires, next to the noiselessness of the wheels, that most attracted attention. They were five inches in diameter for a brougham. The London *Mechanics' Magazine* men-

tioned a set of these tires having been run for 1,200 miles without "the slightest symptoms of deterioration or decay," and there are other references in the papers of that day to the noiseless tires, but they do not appear to have come into use except as a curiosity. The *Scientific American* in 1847 mentioned the appearance of a rubber-tired carriage in New York, but the writer has found no further record of the incident. A French patent was issued to Thomson in 1846, and one in America in 1847. It is the subsequent bearing of the Thomson patents upon the tire patent litigation, rather than the immediate importance of his invention, that is of interest in this work. Tradition has it that Thomson's "aerial" wheels were much laughed at, but in time they were forgotten, and when pneumatic tires again appeared their inventors were surprised to learn that Thomson ever existed. About 1868, however, the leading scientific journals of Europe were describing his solid rubber tires (up to five inches thick) for traction engines for common roads.

The Macintosh Patent

The introduction of the velocipede, or bicycle, led to renewed interest in rubber tires, though these were being attached to small truck wheels, and to invalid chairs and bath chairs. By 1884 each of the leading rubber manufacturers in England had filed patents on solid tires for bicycles and other vehicles, some of these patents dating back as far as 1871. They differed in (1) means of attachment; (2) in the compounds used, as where emery was introduced to give the tread greater wearing capacity; and (3) in form—the tread fitted with a "fin," or made of sectional blocks, to avoid vibration. Macintosh & Co. in 1884 applied for a patent on a tire having a hollow center or a porous or spongy center, to give added resilience, this being a definite departure from the solid type for bicycles.

Dunlop's Entry Into the Field

It remained for John Boyd Dunlop, a veterinary surgeon in Belfast, to bring out the type of elastic tire which was to have the first great and far reaching effect upon the evolution of the bicycle—the pneumatic tire. The first "Dunlop" tire, it appears, was a rubber tube, with means of inflation, bound upon each of the wheels of a tricycle owned by a young son of the inventor, and held to the rim by wrappings of tape. The result was so satisfactory that Dr. Dunlop applied for and obtained patents in Great Britain—No. 10,607 of 1888 and No. 4,116 of 1889—which were the foundation of one of the most important of the tire companies.

After having undergone various changes this concern became, in 1895, the Dunlop Pneumatic Tyre Co., Limited, with a capital of £5,000,000 ($24,200,000), and for a while largely monopolized the pneumatic tire field of Great Britain, besides making large sales elsewhere. In a single year its trading profit exceeded $2,000,000 and dividends were paid amounting to $1,150,000. These figures, by the way, relate solely to the bicycle tire business. But it should be stated that this enormous business was not based upon Dunlop's patents alone.

Originally a tire selling concern based upon a patent monopoly, and founded for the sole purpose of profiting from the ownership of tire patents, the Dunlop Pneumatic Tyre Co., Limited, came in time to consider what should be its course after the expiration of these patents, when it was decided to build up a manufacturing business. The directors adopted the policy of reserving part of the annual profits for building up this new business, and in 1899 organized a subsidiary company known as the Dunlop Rubber Co., Limited, with a factory at Birmingham. This venture proved successful and is now only one of several corporations embraced by the Dunlop system, which controls rubber estates and cotton mills as well as rubber goods factories, and earns over $2,000,000 in net profits annually. The present Dunlop interests include also tire factories in France, Germany, Canada, Australia, America and Japan, and profit from the sale of Dunlop products in many other countries. The Dunlop patent monopoly has long ceased to exist, but this trade name still remains a valuable asset as applied to tires, and has been extended to a large output of miscellaneous rubber goods.

John B. Dunlop's patents really figured very little in the success of the great Dunlop company. It was early realized that his invention covered nothing that was not anticipated in Thomson's patent of 1845, and the company began to acquire other patents, which will be mentioned further on. The Thomson patent, by the way, was held on the Continent to have anticipated many other later inventions or alleged inventions, so that the Dunlop tires never had any patent protection in Europe outside of Great Britain.

The Welch Patent Fastening

The merit of the pneumatic tire being soon recognized, the problem remained of devising means of attaching the tire to the rim that could be relied upon to render cycling safe. The Dunlop company early adopted the invention of Charles Kingston Welch, under the English patent No. 14,563 of 1890, which provided, in addition to an inner tube of rubber encased by wrappings of canvas, a cover of

canvas and rubber having thickened edges, through each of which ran an endless retaining wire sewed in place and forming a complete circle, the wires lying in a metallic rim specially channeled for the

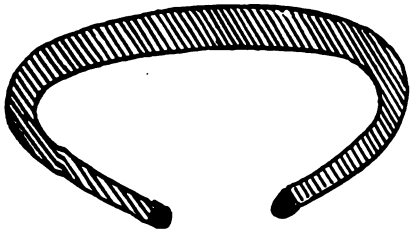

WELCH'S TIRE FASTENING

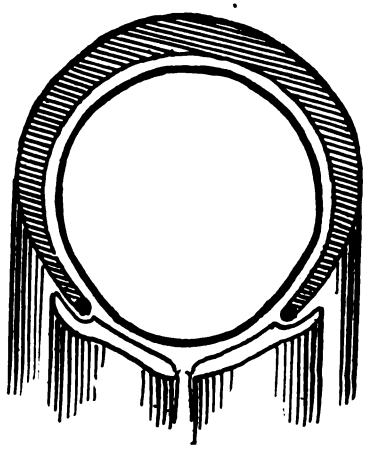

WELCH'S TIRE FASTENING
[Applicable to a tire inflatable under the Thomson patent]

purpose. The wearing surface or tread was vulcanized in a separate operation and cemented to the fabric carcass.

COINCIDENT BRITISH AND AMERICAN INVENTION OF WIRED TIRES

A singular fact is that, about the same time, an American patent was granted to A. T. Brown and G. F. Stillman, of Buffalo, New York,

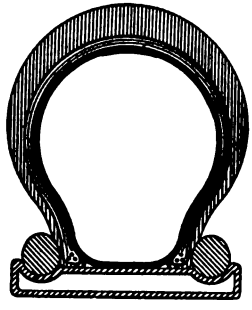

HARTFORD DUNLOP TIRE
[Modification of the original fastening, to adapt the tire to motor cars]

for a precisely similar invention. (Patent No. 488, 494, December 20, 1892.) The fact that their invention was independent and wholly original with the Americans was acknowledged by the Dunlop company

in its payment of $100,000 for the patent, and this was the basis of the introduction of the Dunlop tire business into the United States.

The Dunlop tire was made in America by the American Dunlop Co., which licensed the Diamond Rubber Co. in 1896 to make it. Soon after this the Hartford Rubber Co. evolved from this bicycle tire the present Dunlop type of automobile tire, which is now being made substantially the same by the various factories of the United States Rubber Co.

The growth of the tire trade naturally led rubber manufacturers generally to desire profit from it, and not always to respect patents, and the Dunlop company was soon deep in litigation in the attempt to protect its monopoly. Every feature of construction of their tires

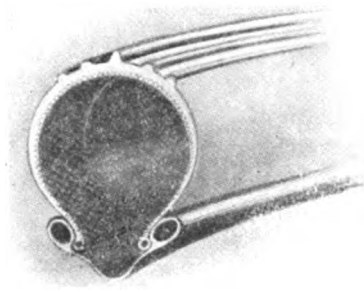

DUNLOP-WELCH PNEUMATIC TIRE

was the subject of actions at law in the various courts, leading finally to a decision in favor of the Dunlops in the House of Lords, the highest English court of appeal. Even after this, however, the patents continued to be infringed, and litigation kept on, the company in one year being a party to 162 pending suits. In many cases the company was unsuccessful, with the result that its monopoly was gradually narrowed. On the evening of September 16, 1904, the date of expiration in England of the Dunlop-Welch patent, at a dinner given by the company, a copy of the patent was consigned to the flames, and the chairman remarked that the expiration could not be viewed with feelings other than those of relief and equanimity. The life of an American patent being seventeen years, the Stillman and Brown patent above referred to did not expire until 1909.

The Bartlett Patent on Beaded Rims

Upon the foundation of the Dunlop £5,000,000 company, another important patent was acquired—that of William Erskine Bartlett (No. 16,783 of 1890), covering the "clincher" principle of tire attach-

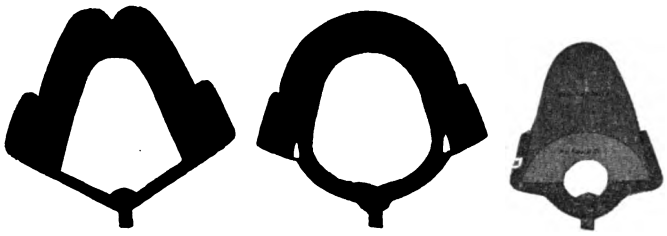

Bartlett's Clincher Tire—Early Forms

ment. Two related Bartlett patents are No. 11,900 of 1889, and No. 16,348 of 1890. Instead of wires for holding the tire cover in place, the cover was made with beaded edges which engaged the incurved flanges of a clincher rim, so that the inflation of the tire held the cover

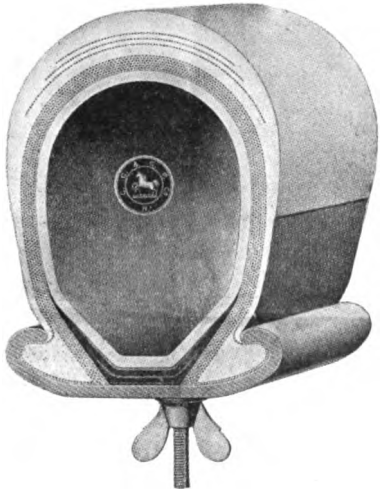

Continental Clincher Tire—1904

rigidly. The price paid for this patent was £200,000 ($968,000), besides which the vendor, the North British Rubber Co., Limited, retained "shop rights" and continued to make and sell the tires on its own account, in addition to those made under contract for the Dunlop com-

pany. This patent was never successfully attacked in England, and proved immensely profitable to the North British company.

The relative number of "clincher" and "wired on" tires marketed by the Dunlop company cannot be stated, but the former type from the beginning enjoyed a great popularity. The Barlett patent expired October 21, 1904. The immediate result was the opening of the British market to tires of the "Michelin" and "Continental" makes, which, while without patent protection in their own countries, had been sold in Great Britain hitherto only by the payment of royalties to the Dunlop company.

The G. & J. Clincher Tire

The clincher type of tire was developed in the United States under patents No. 434,115, No. 466,565, and No. 466,789, granted to Thomas B. Jeffery, in 1891 and 1892. The tire was introduced first by the

G & J Cycle Tire—1899

manufacturers of the "Rambler" bicycle, the Gormully & Jeffery Manufacturing Co., at a time when each leading make of bicycle offered a particular form of tire. The fact that this type of tire was identified with a single bicycle factory probably interfered for a while with its sale, but in time it began to be marketed as the "G. & J." tire, and to be pushed in the general trade. It was the first tire to become a great and successful venture, however, and later was developed into what is known as the quick detachable bead tire, which is an inextensible bead on a clincher tire. The American makers carried the G. & J. tire to England and began its manufacture there, which was stopped as the result of an action for infringement brought by the owners of the Bartlett patent. Similarly the North British Rubber Co., Limited, sought to market its clincher tires in America, when it was successfully proceeded against by the G. & J. people, although American patents had been granted to Mr. Bartlett.

The American Single Tube or "Hose Pipe Tire"

Meanwhile the "single tube" or "hose pipe" tire had become the most popular type for bicycles in America, though never coming into wide use elsewhere. It was built on a straight pole or mandrel and the ends brought together and spliced, thus making them endless, after which it was cured in a circular mold. It was the first type of tire used on American automobiles. Winton used it on his first cars, also Apperson, Haynes and other pioneer automobile manufacturers. It was found unsuitable for automobiles, however, but still remains the leading type for bicycles. With the introduction of the automobile in the United States, the clincher tire leaped into first place in favor, as was the case in France and wherever automobiles have appeared. The G. & J. tire patents were owned by a subsidiary company of the United

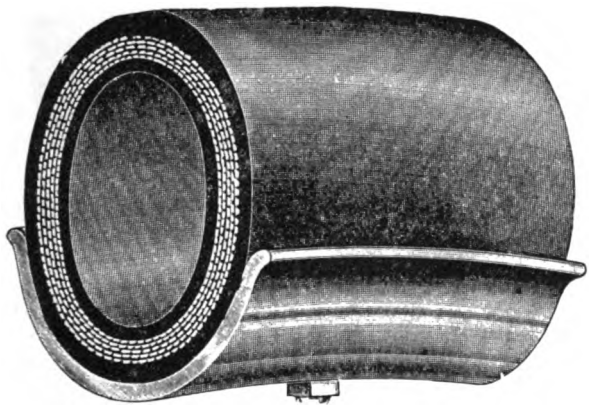

Single Tube Tire

States Rubber Co. which had licensed a number of manufacturers under a royalty and had promptly proceeded to sue for infringement any company, domestic or foreign, marketing clincher tires in America without being licensed. The two principal G. & J. patents expired in January, 1909.

Some motorists for several years manifested a preference for single tube tires. Morgan & Wright was perhaps the last firm to make them of standard type, while in 1906 the Swinehart tire was brought out to combine the single tube principle with clincher fastenings. It was provided on the sides with beads which engaged an ordinary clincher rim. The tire differed also from the ordinary single tube in being slit all around on the inner side, and put in place in the same way as any detachable tire casing.

Clincher and Straight-Side Tires

While very many different makes of tires, in many countries, gradually became accessible for automobiles, each manufacturer as a rule offering some special feature, and until the recent general adoption of straight-side tires in America, the standard type of pneumatic the world over has been the clincher tire. It is this type which was adopted in France by the house of Michelin, whose contribution to the development of the automobile by reason of its work in tire construction is so widely recognized, and which that firm also began to manufacture in America in 1907. It is the type, too, which was taken up by the great

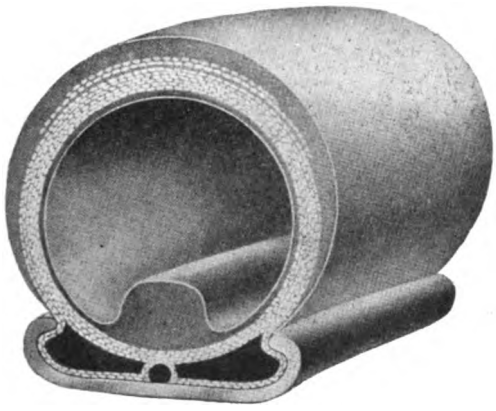

Swinehart Single Tube Tire

Continental company, of Germany, and later by other manufacturers in that country. The Dunlop-Welch tire continues to be manufactured with the introduction of new features from time to time.

The Tillinghast Single Tube Patent

In the early days of the bicycle "boom" in America, every manufacturer tried to produce something different from every other, this individuality extending to the tires as well. Among the many tires brought out, the "single tube" tire, patented by Pardon W. Tillinghast, May 23, 1893, and first introduced by Colonel Albert A. Pope on his "Columbia" bicycles, became in time more popular than any other; in fact, it grew to be the standard type for cycles in the United States. The same principle had been worked out in England by A. Boothroyd, who failed to take out a patent, so that the invention became public property in that country, though tires of this type never came into wide use anywhere in Europe. Single tube tires have been used extensively

on sulkies and light carriages in America, but on heavier vehicles, including automobiles, certain advantages claimed for the single tube, as in the case of repairing punctures, for instance, have not been experienced. The Tillinghast patent was owned by an association, subsidiary to the United States Rubber Co., which licensed the various manufacturers. The Tillinghast patent expired May 23, 1910.

Palmer "All Warp" Tire Fabric

In 1893 there was introduced a special fabric for tires, patented in the United States and Great Britain by John Fullerton Palmer, of the former country. This fabric was what was called in weaving "all warp," having no weft threads crossing the warp. These warp threads were laid on sheet rubber, and for use as a tire were cut into strips of the desired width, the ends of which were cut on the bias. A strip was helically wound on a mandrel, and the opposite edges of the strip were brought into contact in the winding—thus forming a tube. Another strip of this fabric of the same width was superimposed on the first and helically wound in the same manner in the opposite direction. The four ends of the two strips were manipulated in such a manner as to form this tube into an annular tubular tire; an airtight lining previously being provided. A single tube tire was thus formed and was fitted to an ordinary crescent shaped rim, to which it was held by cement as the solid tire had been. The Palmer tire as first made was essentially a path racing tire, but the principle was applied gradually to tires for all purposes, including motor tires of the detachable, clincher rim type. The tire has been particularly prominent in the British trade. The Palmer patents were the basis of much litigation; but in the main were sustained, and they have been supplemented by a number of patents, as for example the Silvertown Cord tire, for further carrying out the original idea.

The Thomas Patents

An early inventor in the pneumatic tire field was A. J. Thomas, an American, to whom three patents were granted, under date of March 12, 1889, for a tire to be undetachably held to the rim. The Thomas tire appears never to have been exploited commercially, but his patents were quoted many times in litigation on both sides of the Atlantic to prove priority of invention.

Flat and Ribbed Treads

Pneumatic tires had been of round exterior cross section until in 1904 the Continental Caoutchouc Co., followed closely by Michelin et Cie., brought out flat or so-called raised tread pneumatic tires in

Europe. Nearly two years later the G. & J. and Diamond companies began their manufacture in America, and within a few months most tire companies were making them, regularly or to special order. Despite the modified tread, they were of round interior section so far as the canvas and strains were concerned. As better traction at high speed and greater steadiness on the road were among the claims made for them, they may be classed among the early non-skid types of tires. Indeed, following the lead of the principal English flats, notably the "Palmer" and "Imperial," tires of this type were soon made with bold corrugated ribs, which lessened the possibility of suction, rendered the tire practically skid proof, eliminated many disadvantages, both actual and theoretical, such as reduced resiliency, more dust raised from the road and greater likelihood of being cut at the edges of the tread by sharp stones, thus risking the separation of the rubber from the can-

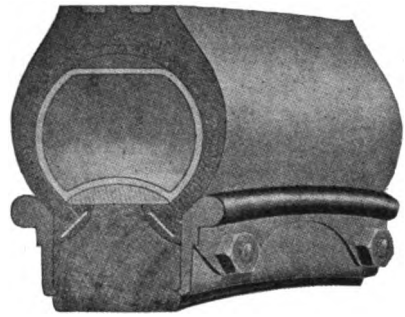

PALMER FLAT TREAD PNEUMATIC TIRE

vas. The fear that a flat tread built upon a round tire, thus creating thick corners on each side, would cause the weight of the car, running upon these corners, to crimp or bend the tire sharply in the center of the tread and gradually destroy the canvas along the line was soon dispelled by experience, provided the tire was run too soft. All objection made because of the danger that in the necessary process of molding these tires, the canvas might be crimped or wrinkled in the mold, thus bringing it very close to the surface in spots where it would soon wear through and burst, was promptly eliminated by improved methods of manufacture.

These tires were first used for racing on a smooth track, but were soon found to have a sufficient resiliency for general motoring in combination with the improved spring suspensions of the cars then being developed, and also to require little additional driving power. Their use was confined to the rear wheels, however, as it was found that

a car equipped with them on the front wheels was less easily steered. The greater durability of flat tread tires was due in some cases to the use of stronger canvas, but many companies, like the Diamond, put the flat tread on their regular type. In such cases the cost was 10 per cent. more, owing principally to the extra rubber; but as the life of the tire was prolonged more than 10 per cent., owing to the better protection against punctures and stone bruises, the extra cost was more than justified. While many non-skid tires at present have a nearly round cross section, there is a growing tendency, especially in cord tires, toward raised and nearly flat treads with distinctive tread designs.

In the case of heavy motor trucks, which then ran slowly on solid tires, traction or road grip was not usually so important as avoidance of skidding. Small road contact was therefore the object in truck tire design in order to lessen road friction in running, and the tendency was away from flat treads toward twin and triple tires which have less road contact, create less suction, give sufficient traction for their low speeds, and thus greatly lessen the danger of skidding. Such tires have now been supplemented by non-skid tread designs and cord pneumatics.

Taxicab and Public Service Vehicle Tires

The introduction of the taxicab in America in 1907 and its quick popularity not only created a new demand for tires, but so conclusively demonstrated the convenience, and general efficiency of motor transportation as to give impetus to the adoption of automobiles for both business and pleasure, with consequent benefit to the tire industry. It also assisted greatly, to bring about the equipment of public service vehicles, notably fire apparatus and police wagons, with rubber tires.

Non-Skid Treads

For a number of years pneumatic tires had smooth treads, whether round or flat in cross section, slipping in wet weather being prevented by the temporary application of chains or steel-studded treads of leather. Then came the non-skid or all-weather tread. At first it appeared in many guises, prominent among them being the steel-studded leather tread cemented to the tire casing, steel studs and cotton fabric or cords imbedded in the rubber tread of the tire. But the type that has persisted and is in general use to-day is the all-rubber non-skid tread which is an integral part of the casing.

The Bailey "Won't Slip" Pioneer

The Bailey "Won't Slip" was doubtless the pioneer all-rubber anti-skid, with its lozenge shaped protuberances. After a while, how-

ever, other styles were evolved, the "nobby" tread, the "staggered" tread, and a host of others. Long ago, apparently, almost every conceivable geometric figure had been employed on the tread surface, yet every month brings a grist of new ones through the Patent Office. Some are practical, others more decorative than useful; many show imitativeness rather than originality, but all are interesting in that they indicate thought and a desire for all possible improvement.

At first it was the custom to equip only rear wheels with non-skid tires because that is where they are needed chiefly and also to save expense. Non-skid tires sell at 10 per cent. more than smooth treads, but have been found to give more than that extra value in service. Extra rubber is required to build up the non-skid tread, and the user obtains that much additional mileage before the casing is worn smooth. Then it can be changed to a front wheel. Indeed, the advantage of having all tires alike and interchangeable has been a principal factor in rendering non-skids far more popular than smooth treads. They have a decided advantage for light cars, as cars equipped with them hold the road much better at high speed and sway less, and the better traction makes them real gasoline savers.

Rim Development

From the outset the improvement of rims and rim fastenings has been an object of inventive genius no less than the tire itself, the aim being to facilitate tire changing, especially on the road. The first rims for clincher tires, which had become the standard automobile equipment throughout the world, were permanently fastened to the wheels. It being a difficult and awkward task to remove or apply a clincher tire to the rim of a wheel on a car, especially in the larger sizes, inventors first sought to improve the clincher rim. This brought forth many quick detachable flanges which facilitated the operation. Then came the demountable rim, which enabled the motorist to carry an inflated tire ready for use when needed. The change on the road could be made easily, and the damaged tire removed from the rim later for repair much more readily. The tire still had to be removed or applied with levers, however, but the introduction of straight-side tires in America for all except 30 by 3 1-2 and 31 by 4 sizes has made possible the split demountable rim, now standard equipment, which is readily contracted and removed from the tire.

Improved Tire Machinery and Fabric Looms

So long as production was limited, tires were built by hand methods. As the demand increased, necessity became the mother of

invention, and in recent years the new devices pertaining to tire manufacture have been numerous and interesting. The many machines evolved to handle every detail of the work, which are referred to more fully in other chapters, show that unusual inventive skill is being consistently directed toward increased efficiency. While turning out tires, at first by the thousands and later by the millions, manufacturers have so notably increased the quality that the average of 1,500 miles of wear at the beginning and of 3,500 miles for several years has risen to 6,000, 7,000, 7,500, 8,000 miles, and 10,000.

Rapid Rise in Mileage and Guarantees

Improvements in fabric weaving and the development of cord construction have had quite as much to do with increased mileage guarantees as improved rubber compounds, building and vulcanizing methods, although these have doubtless been a big factor. Certainly cord construction has prolonged tire life and reduced the cost per mile, lessened car wear and tear and provided greater riding comfort.

The following table including only a few representative makes of tires gives a fair idea of the more or less general increase in mileage guarantees and adjustment basis ranging from about 30 to 75 per cent. which went into effect during 1919:

Make	Kind	Former Mileage Guaranty	Present Mileage Guaranty
Diamond	fabric	3,500	6,000
Diamond	cord	5,000	8,000
Federal	"Rugged" tread	5,000	7,000
Federal	cord	6,000	8,000
Firestone	fabric	3,500	6,000
Firestone	cord	.....	8,000
Fisk	"Red Tops"	4,000	7,000
Fisk	cord	.....	8,000
General	"Jumbo"	.....	7 500
General	cord	.....	7,000
Goodrich	fabric	3,500	6,000
Goodrich	cord	5,000	8,000
Keystone	fabric	4,000	6,000
Racine	non-skid fabric	5,000	6,000
Racine	cord	7,500	8,000
Stronghold	Ford sizes	.....	7,500
Stronghold	Other sizes	.....	6,000

Several companies have made no change because their mileage basis was already high enough. A few of the larger firms give no mileage guaranty as a basis of adjustment, preferring to adjust claims on poor material or defective workmanship in the individual case. This method, they believe, gives greater satisfaction than setting a fixed scale which is often inapplicable to the case in hand.

About five years ago an unlimited guaranty covering the full life of the tire was adopted for Goodyear passenger car tires, and that form of guaranty has now been extended to solid and cushion tires. No matter how far a Goodyear tire has been driven, whether it be 5,000 or 50,000 miles, or how long its period of service, a fair and equitable adjustment will be made if it proves defective.

What Cord Construction Has Accomplished

Not only did the cord principle prove a boon to the motorist, but it made possible the wide application of the pneumatic tire to motor trucks. Pneumatic tires as large as 38 by 8 and 40 by 6 have been made for six years or more for public service vehicles, such as fire apparatus and police wagons, requiring great strength and durability, but these were fabric tires of extra ply construction made to special order and at great expense. Cord tires measuring 36 by 6, 38 by 7, 40 by 8, 42 by 9 and 48 by 12 are now standard products, being marketed for use on motor trucks ranging in capacity from 1½ to 5 tons. Their advantages over solid tires for both passenger and freight trucks is well summed up as follows by an official of one of the first automobile companies to adopt cord tires as regular equipment of its trucks:

"After the most exhaustive comparative tests with several trucks of the same model, some equipped with pneumatics and others with solid tires, our engineers found that from every standpoint the pneumatic tired truck was infinitely superior.

"First, it was more efficient for the reason that it would travel at nearly twice the speed and thereby make twice as many trips in a given time. A one-ton truck on pneumatics would carry more tonnage day in and day out than a three-ton truck mounted on solids and therefore limited in speed.

"Second: The upkeep cost was almost unbelievably less, due to the fact that not only did we obtain more mileage on a set of pneumatics than on solids, but that the air cushion effects a wonderful saving on the chassis. Also our engineers found that the fuel consumption was less for the well known reason that any pneumatic tired vehicle requires less power.

"Another factor that was much in favor of the pneumatics was the absence of injury to loads of fragile materials. Perishable goods suffer less in a pneumatic tired truck than they do in a solid tired vehicle, even though the latter go at half speed."

Pneumatics for Freight Carrying

It is becoming more and more evident that for rapid long-distance hauling the pneumatic tire is likely to oust the solid on the heavy truck, just as it did on light vehicles. The first cost is naturally heavy, and punctures unavoidable, but the saving more than offsets both of these items. Apart from double speed without injury either to engine or freight, the weight of the chassis can safely be reduced nearly one-half. Big trucks are equipped with "giant pneumatics" to-day. One wonders if in time these huge tires will be pigmies compared with the tires of the future.

Owing to the remarkable success of the motor truck for express and freight handling within a radius of fifty to one hundred miles, few, if any, short-line railroads will be built hereafter in this country. Experience has shown that for such short-haul business the motor truck is cheaper, quicker and generally more efficient. Its use will therefore continue to increase.

Great Growth of the Truck Industry

In the summer of 1919 there were 750,000 motor trucks in service in the United States. Those competent to judge estimate that within five years after the end of the World War, this number will exceed 4,000,000 and that nothing can stop this great economic movement except the failure—which would be a national calamity—to build permanent, continuous hard-surfaced roads of adequate strength to carry the greater tonnage at the faster speed required.

Tire Patents and Litigation—Great Britain

As has been mentioned, the patents granted to John Boyd Dunlop for a pneumatic tire, though the means of creating a wide interest in this type of tire, and giving a great impetus to the sport of cycling, were otherwise of little importance. The principles of Dunlop's patents having been found to have been anticipated by Thomson, the company formed to exploit the Dunlop invention, in order to utilize its capital, proceeded to acquire other patents, particularly that of Charles K. Welch. The Dunlop tire, by the way, was an inflatible, endless tube, held in place by taping surrounding the tube and the wheel rim.

The Welch Patent Suits

The Welch specification was for "Improvements in rubber and metal rims or felloes of wheels for cycles and other light vehicles." The specification is voluminous, referring to no fewer than 18 drawings, illustrating various applications of the principle involved. The essence of the invention is expressed in the first of the 18 claims, as follows:

1. A rubber or elastic tire having the form of a saddle or arch in section in combination with two wires inserted through the sides of the same for securing it to the metal rims or felloes, substantially as herein described.

"Hitherto," said the inventor, "the majority of rubber tires used on cycle wheels have been round in section and of small diameter, fitted in grooved rims or felloes, which has not only rendered half of the rubber tire of little or no use for reducing vibration, but also cut on the sharp edges of the rims or felloes, thus destroying the tire."

The Welch invention was not of a *pneumatic* tire specifically; it was an improved method of applying tires—solid, cushion, or pneumatic—so as to afford at once "easy running, reduction of vibration, and security of the rubbers to the metal rims or felloes." Hence the patent drawings illustrate every form of tire then known.

It is of historical interest that one drawing "shows a transverse section of a saddle or arched shape rubber or elastic tire constructed according to my (Welch's) invention for covering, protecting, and securing tires of wheels which are unflatable with air as described in Thomson's patent, No. 10,990 of 1845, and are now in present use." This is the application of Welch's invention to tires having inner air tubes, and it may be said that the figure in the patent drawings relating to this form of tire represents fairly the cross section of the Dunlop-Welch tire in its finally perfected form, as made in England until the expiration of the patent.

The "Inextensible Edge"

The Pneumatic Tyre Co.—the name by which the Dunlop company was first known—early became involved in litigation in defense of the Welch patent. In the case of the Pneumatic Tyre Co. vs. Casswell, Justice Kekewich, in February, 1896, rendered a decision sustaining the patent, which was repeatedly reaffirmed in his own and other courts, as new questions arose, a final favorable decision being reached in the House of Lords. Meanwhile the tire gradually became modified until a standard form was reached—a pneumatic tire,

consisting of an inner tube, a cover held in position by *inextensible edges,* engaging a specially channeled rim, the patents on which were also held by the Dunlop company. The Welch patent, in the end, was so construed that any device performing the service of his two retaining wires was held to be an infringement—even a tire cover having the edges rendered inextensible by means of solutioned yarns and employing no wires at all.

The New Lamb Tyre Co., of Glasgow, was sued November 4, 1901, in the Court of Session of Scotland, by the Dunlop company, which alleged infringement. The defense was that the tires complained of had been made under a different patent (No. 23,852 of 1897), and that there had been no infringement. In April, 1902, a decision was rendered in favor of the Dunlop company, followed by an appeal, when the decision was affirmed. The court held that the tires had not been made in accordance with the Lamb patent. The edges of the Lamb tire covers were made with a number of loose strands of yarn solutioned on to form part of the cover itself, which strands formed a taping to strengthen the edge of the canvas. The defense denied that the effect of such strands was to hold the tire cover in position, but that the cover was held by frictional or other forces. The court, however, decided that the efficient cause of the tire being kept in place was the inextensibility of the edges produced by the hempen strands, which constituted an infringement of the principle of the Welch patent, under which this service is performed by the inextensibility of the wires in the edge of the tire covers.

The Dunlop company brought suit for infringement against Arthur Neal, in a case as follows: A worn-out Dunlop-Welch cover was taken to Neal for repairs. It was admitted that he made use of a new lining and a new rubber cover, so that the article supplied to the customer contained nothing that formed part of the original tire cover except the two wires. It was held that Neal had not merely made repairs; he had constructed a new article, and, not having a license to manufacture under the Dunlop patent, an injunction was issued to restrain him from further infringement.

The Dunlop-Moseley Suit

The Dunlop company brought suit against David Moseley & Sons, Limited, and India-Rubber & Tyre Repairing Co., an action in which a decision was rendered by Justice Swinfen-Eady on December 15, 1903. It was alleged that the first of the defendants named made and sold, and the second sold, tires or parts of tires in infringement of both the Dunlop-Welch and the Bartlett patents, owned by the

plaintiff. It was not denied that Messrs. Moseley had made and sold many pneumatic tire covers of the description referred to, but they pleaded in defense that the patents were for combinations of parts, whereas the sale of parts alone—as tire covers—did not constitute infringement. After the case had been strongly contested, the court held (December 15, 1903) for the defendants. Messrs. Moseley were rubber manufacturers and made and sold pneumatic tire covers, but dealing in these apart from the other components of a patented tire was not infringement. They sold such covers for export, but this was a lawful trade. So was selling the covers to persons who had licenses from the Dunlop company to use them.

The court said further: "To say that the ultimate purpose to which the purchasers might put the covers, whether having obtained

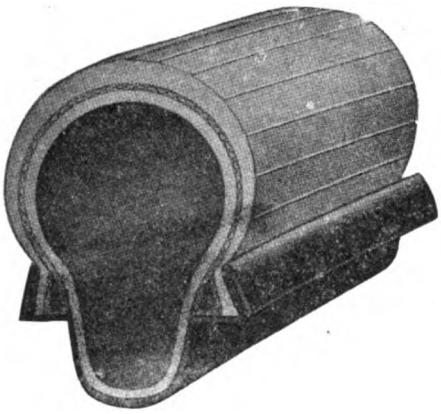

BARTLETT'S CLINCHER TIRE—1892

them for export, they did export them, or whether they afterwards used them in this country, so as to put upon the defendant the burden of ascertaining whether the persons to whom the articles were sold were intending lawfully to use them, would be imposing a burden on them which, in my opinion, the law does not impose." On this case being carried to the court of appeal, the preceding decision was affirmed, and the appeal dismissed.

THE DUNLOP-NORTH BRITISH SUIT

The North British Rubber Co., Limited, was sued by the Dunlop Pneumatic Tyre Co., Limited, in 1903, for alleged infringement and violation of license. The latter company purchased from the former,

in 1896, the Bartlett patent, under which it had made the clincher tire. At the same time the Dunlop company licensed the North British company to continue the manufacture of the clincher tire, under said patent, on the payment of a royalty of 5 shillings ($1.20) per pair, but stipulating that the North British company should not manufacture any tire which might infringe the Welch patent, also owned by the Dunlop company. In January, 1903, the North British company entered into an agreement with Michelin et Cie., of France, whereby the latter should manufacture such clincher tires as the North British company might require for its trade in Great Britain. The French company was not to supply such tires to any other firm in Great Britain, and the North British company was not to have such tires made by any other company, though reserving the right to make in its own works not more than 5,000 tires per year. The tire so produced was labeled "The Clincher-Michelin Tyre, Bartlett's patent."

The plaintiffs in this case charged the North British Rubber Co., Limited, with violation of the terms of its license in subletting the license to Michelin et Cie. The court, however, held that in this transaction Michelin et Cie. was merely an agent of the North British company, which was, in the eye of the law, the manufacturer of the "Clincher-Michelin" tires; there had been no assignment of the license held from the Dunlop company. As to the second point involved—the claim that the tires so made had, by the inclusion of features not in the original clincher tire, infringed the Welch patent—the court held that further evidence would have to be presented.

The decision given by Justice Byrne was appealed from by the Dunlop company, and affirmed by the Court of appeal March 1, 1904.

Other Dunlop Suits

In May, 1896, The Pneumatic Tyre Co., Limited, commenced an action against the Puncture Proof Pneumatic Tyre Co., Limited, alleging infringement. It was by consent ordered that an injunction be granted against the defendant, when the question came before the court as to the damages to be allowed, in respect of tires made and sold by the infringing party, a decision being reached in February, 1899. The net profits which the Dunlop company made were stated to be about £1 ($4.84) per tire. The court, however, made an award on the basis of 2 shillings 6 pence (60 cents) per tire, the amount of royalty then paid by the Dunlop company's licensees.

The Palmer Tyre, Limited, sued The Pneumatic Tyre Co., Limited, in the English high court of justice. The plaintiff's case rested upon three British patents, which, combined, covered the production

of a pneumatic tire, and it was alleged that the defendant company was making tires which involved infringement. The patents were No. 4,350, of 1889, issued to Amos W. Thomas, for a pneumatic tire; No. 19,411, of 1890, to J. R. Trigwell, for a tire and rim, and No. 4,926 of 1889, to John Fullerton Palmer, for an improved fabric. Interest in the case turned upon the third patent, which specified a fabric to be "used in pneumatic tires." This was a fabric comprising a sheet of rubber having embedded therein, before vulcanizing, fibrous threads parallel but not touching each other, two plies of such fabric being arranged one upon the other so that the threads might cross at any desired angle. It was held by Justice Wills (in 1899), that the tires made by the Dunlop company infringed neither the Thomas nor the Trigwell patent, and that the "flexifort" fabric used in the Dunlop tire covers, serving the same general purposes as the fabric of Palmer's patent, was not described in that patent. In "flexifort" the threads were not "embedded" in rubber; they were not kept out of contact; and there was no vulcanization, the threads being kept in place by means of a film of rubber solution between the two layers of threads, the whole being put under pressure. Moreover, the very thing which Palmer patented had had prior use in the factory of Moseley, at Manchester, particularly in making solid rubber tires of layers of rubber having threads embedded therein. This fabric had been patented by Moseley. The court held that the purpose for which a fabric was used was immaterial to this case; the question was whether the "flexifort" fabric was the same as Palmer's and the question would be the same, whether the fabric was used for a coat, a hose pipe tire, or a tire cover.

So many were the new points raised by eminent opposing counsel in the suits referred to that the hotly contested litigation over the Dunlop tire is recognized as having led to the rewriting of British patent law.

French Decisions

Patents were granted in France on the Dunlop pneumatic tire, but were not respected by other manufacturers. In 1895 the Dunlop company seized tires made by a half dozen French concerns—Michelin, Vital and others—and brought suits for infringement of patents. The case involved many technicalities, and a review of the whole field of tire invention, so that the board of government patent experts, to which the case was referred by the court, did not report until two years later. The finding was against the Dunlop company, the court holding that the principle of the pneumatic tire was anticipated fully in Thomson's invention, patented in France in 1846. This did not prevent the Dun-

lop company, however, from continuing business in France, where it still maintains a factory.

Dunlop Enters the Canadian Field

Dunlop cycle and automobile tires were manufactured in Canada under two Canadian patents—one granted to Fane and Lavender in February, 1892, and the other to C. K. Welsh in October, 1892. Previous to June, 1892, the life of a Canadian patent had been 15 years, in three terms of 5 years each. In that month the law was changed to extend the duration of a patent to 18 years, in three terms of 6 years. On application to the Canadian Parliament in 1907 the Dunlop company succeeded in having the term of the Fane and Lavender patent made of equal length with that of the Welsh patent, and in reviving the latter, which had been allowed to expire owing to the non-payment of the fee for one term. The bill was strongly opposed by other manufacturers who were planning to make Dunlop tires, but the claim of the Dunlop company, that no benefits had been realized for the first three years because of litigation growing out of the fact that two patents bearing different expiration dates had been granted for one invention carried greater weight. Both patents expired in October, 1910.

CHAPTER III

HISTORY OF THE PNEUMATIC TIRE, CONTINUED

The American Tillinghast Suits

THE Tillinghast single tube tire patent in the United States was the basis of a long and vigorous legal contest, which probably was the most important tire patent case in the American courts. A record of the events leading up to the decisive suit relating to this tire appears under the heading "Tire Associations" that follows. The basis of the suit was patent No. 497,971, issued to Pardon W. Tillinghast. The case decided was Theodore A. Dodge vs. Fred Howard Porter et al., in the United States circuit court, at Boston, the decision being given by Judge Colt, November 14, 1899. The defendants associated with Porter were Francis Flint and Joseph McCune, the three doing business as the Reading Rubber Co., at Reading, Massachusetts.

The decision sets forth that previous to the Tillinghast tire, the double tube pneumatic tire was in common use. It was to overcome what the patentee regarded as defects in the double structure that he invented his single tube tire. Pneumatic tires had been constructed with inner and outer tubes of rubber separately vulcanized, with the joints and parts cemented together after vulcanization. Trouble was likely to be caused, however, by the chafing of the parts in contact, and the cemented joints were liable to separation under the strain caused by the constant flexing of the tire at the tread.

The claims in controversy appear as follows in the specification of Tillinghast's patent:

1. A pneumatic tire, consisting of a rubber air tube, and outer covering, substantially as specified, with the ends of the air tube and other component parts securely united by vulcanization, substantially as described, thereby constituting an integral complete tire.

2. A pneumatic tire, composed of a rubber tube, all intermediate layer of fabric, and an outer covering of rubber, substantially as described, having all its rubber joints and component parts simultaneously vulcanized together, forming an integral annular tire.

The evidence showed that Tillinghast invented his single tube tire, and disclosed it to others as early as the summer of 1890, and that, consequently, his invention antedated the article by Boothroyd, describing a single tube tire, published in *The Cyclist,* in England, on December 3, 1890.

The principal defense was that the Tillinghast patent, in view of the prior act, was void for want of invention. Regarding the various prior patents cited, the court decided in substance as follows: In the construction of a pneumatic tire, Thomson, in his patent of 1847, considered an outer cover necessary for the protection of the inner rubber air tube, but did not conceive the idea of making the inner air tube an integral part of the outer cover. As for the three Thomas patents dated March 12, 1889, the principal feature of novelty consisted in having the tread portion thicker than the other parts of the tire. It was thought by the patentee that a pneumatic tire could be made out of a single annular tube without any intervening fabric. The only other tire in the prior art at the date of the Tillinghast invention was the Dunlop tire, which was a double tube tire, and manifestly not an anticipation of the Tillinghast device.

It appeared from several American and British patents that it was the common practice, previous to 1890, to manufacture rubber hose composed of an inner tube and an outer rubber covering, with intervening fabric, all vulcanized together. But a pneumatic tire is quite a different thing from rubber hose, and each belongs to a distinct art. Rubber hose is tubing of indefinite length, open at both ends; it is not an annular pneumatic tube forming a tire. There was nothing in the structure or use of rubber hose tubing which afforded any suggestion leading to the production of a pneumatic tire.

The decision having been in favor of the plaintiff, the case was carried to the United States circuit court of appeals, where the finding of Judge Colt was affirmed in a brief opinion. the salient feature of which reads:

"We are of the opinion that claim 2 fully and correctly represents the invention of the patent, and that claim 1 is too broad to be valid."

Morgan & Wright sued the Pennsylvania Rubber Co., for alleged infringement of patent No. 502,047, of July 25, 1893, covering the method of closing the ends of inner tubes—of the type described as "pinched end" or "flattened end." In January, 1903, Judge Buffington, in the United States court in the western district of Pennsylvania, rendered an adverse decision, holding that the Pennsylvania company had "found a different method of closure, and such mode is not by a flattened end." An appeal was taken by Morgan & Wright, and on December 7 a decision was handed down by the circuit court of appeals affirming the decision of Judge Buffington.

Morgan & Wright had previously sued The B. F. Goodrich Co., for infringement of the above patent, and of patent No. 502,048, in the

United States circuit court in the northern Ohio district. In two decrees by Judge Hicks, in this court, October 15, 1896, the validity of the Morgan & Wright patents was sustained.

At the same time and place another case of Morgan & Wright vs. The B. F. Goodrich Co., was decided in favor of the plaintiffs—a suit for infringement of patent No. 490,035, covering the process of making the Morgan & Wright tire sheath on a mandrel.

The patent on a pneumatic tired sulky wheel (No. 494,113) granted in 1893 to Sterling Elliott, and by him assigned to the Hickory Wheel Co., was declared invalid by the United States Circuit Court, at Chicago, and, on appeal, by the United States Supreme Court in 1900. The Hickory Wheel Co., sued for infringement of the patent claim: "the combination in a trotting sulky of a frame, shafts, or pole, and seat, and wheels less in diameter than the distance between the shafts and the ground, and provided with elastic tires." The courts held that makers of bicycle tires had anticipated Elliott, and that the fact that his tires were to be applied to vehicles of another form did not give to them the elements of novelty.

The United States Circuit Court of Appeals at Cincinnati, in 1899, rendered a final decision in a suit involving priority of invention of a tire fabric, under patents No. 493,220, granted to John F. Palmer, and No. 539,224, granted to R. W. Huss. Delay in granting the patent to Huss was due to Palmer's patent having been declared in interference. After a long contest, the patent office awarded priority to Palmer, and a patent was issued to him. The court declared the *fabric* patents of both parties to be invalid, because, in previously making applications for patents on *tires,* both parties illustrated and described the fabric without at that time making claims for the fabric.

The Single Tube Tire Association

The American single tube tire patents granted to Pardon W. Tillinghast, then of Providence, Rhode Island, proved to be among the most important in the history of the tire trade. Mr. Tillinghast was a prolific inventor, but reference is made particularly to two patents: No. 486,915, issued November 29, 1892 (application filed June 20, 1892), and No. 497,971, issued May 23, 1893 (application filed September 2, 1892). The latter was the basis of the long continued litigation which resulted in favor of the proprietors of the patents and gave them a monopoly of single tube tire production in America.

It was not until 1895 that Mr. Tillinghast made any move toward having his patents respected. In that year he notified the Pope Manufacturing Co., then owning the Hartford Rubber Works, that it would

be prosecuted if it made "hose pipe" tires without respecting the validity of his patents. Colonel Albert A. Pope, head of the company, thereupon purchased the patents. In December, 1905, the Pope company filed a suit for infringement against the Boston Woven Hose & Rubber Co., which, after the employment of able counsel by the defendant, was settled out of court. Papers were prepared for similar suits against two or three other tire manufacturers, who had knowledge of the proposed actions. These parties became licensees under the Tillinghast patents, however, and the suits were not filed.

Shortly afterward the Tillinghast Tire Association was formed, consisting, it is said, of Colonel Pope, of the Hartford Rubber Works; Colonel Theodore A. Dodge and J. Edwin Davis, of the Boston Woven Hose company, and a representative of one other large rubber concern. Afterward the membership was increased and underwent many changes. Upon the formation of the Tillinghast Association the matter of protecting the tire patents was put in the hands of Colonel Dodge, as trustee. The B. F. Goodrich Co., the Revere Rubber Co., the Hodgman Rubber Co., and some other important companies at once took out licenses. There were, however, many infringers. In April, 1896, it was stated that twenty-five companies were making single tube tires who had not become licensed.

A number of suits for infringement were brought by Colonel Dodge, though only two were carried through—one against the Reading Rubber Tire Co., under the style Theodore A. Dodge vs. Fred Howard Porter et al., and one against the New Brunswick Rubber Co., owned by the United States Rubber Co. The result was favorable to the plaintiff, as will be seen on another page.

United States Rubber Co. Acquires Eighteen Subsidiaries

On November 21, 1899, following closely upon the favorable decision in the Tillinghast suits, The Single Tube Automobile & Bicycle Tire Co., with $1,000,000 capital, filed in New Jersey articles of incorporation signed by Colonel Dodge, president of the Tillinghast Tire Association; L. K. McClymonds, president of the Mechanical Rubber Co.; George Pope, vice-president of the American Bicycle Co.; and certain bankers. The Tillinghast Association thus ceased to exist. Colonel Dodge asserted that he had been owner of the Tillinghast patents for four years, though others had been interested with him in the profits to be realized, including A. A. Pope. At the same time it became known that Colonel Pope's interest in this connection had been acquired by the Rubber Goods Manufacturing Co., through the purchase of the rubber tire factories controlled for a short time previously

by the American Bicycle Co., in which Colonel Pope was prominently concerned. The Single Tube Automobile & Bicycle Tire Co., continued to exist for several years, with Colonel Dodge at its head, and with an interest held by the Rubber Goods Manufacturing Co. In 1907, the shares of the latter firm having been acquired by the United States Rubber Co., its liquidation was effected, thus bringing under the control of the United States Rubber Co., eighteen subsidiary companies, among which were the Single Tube Automobile & Bicycle Tire Co., the Hartford Rubber Works Co., Morgan & Wright, G. & J. Tire Co., American Dunlop Co., and Midgley Manufacturing Co. Thus the United States Rubber Co., which for four years had fought the validity of the Tillinghast patents, came to share materially in the profits arising from the single tube tire monopoly.

The Tillinghast-Continental Suit

Meanwhile an infringement suit, in relation to the Tillinghast tire patent, of the Single Tube Automobile & Bicycle Tire Co., vs. Continental Rubber Works, which had been pending since November, 1904, resulted in a decision for the plaintiff, rendered by Judge Buffington and filed August 7, 1909, in the United States Circuit Court for the western district of Pennsylvania.

The patent in question was No. 497,971, and the language of the claim which was the basis of the action follows:

2. A pneumatic tire composed of a rubber tube, an intermediate layer of fabric, and an outer covering of rubber, substantially as described, having all its rubber joints and component parts simultaneously vulcanized together, forming an integral annular tire.

The defense of the Continental company rested in part upon the publication by A. Boothroyd, in England, in December, 1890, of the idea of a single tube bicycle tire. But the court decided that, whereas the application of Pardon W. Tillinghast for a patent was of later date, "as early as July, 1890, Tillinghast had a clear conception of his pneumatic bicycle tube embodying the elements of his second claim," and that prior to September in the same year he had disclosed the same to credible witnesses. As the merits of the Tillinghast claim had already been passed upon favorably in two different jurisdictions, Judge Buffington did not see his way clear to depart from the theory on which the proceding decisions were based.

Prior to this latest decision the Continental Rubber Works had made about 1,250,000 tires infringing the Tillinghast patent, and as the royalty demanded by the complainant from its licensees was 5 per cent., with 15 cents per pair minimum, the amount of damages in-

volved made a considerable sum. The Continental company promptly appealed, with the result that early in 1910 the United States Circuit Court of Appeals affirmed the decision of the lower court that the Tillinghast patent was not anticipated, was valid and had been infringed. The Continental Rubber Works thereupon entered into a license agreement for the life of the patent, which expired May 23, 1910.

The Continental suit had been pending so long that some of the licensees under the Tillinghast patent ceased to pay the royalty, on the ground that they were not receiving the protection due them. When the decision on appeal was rendered several of the licensees paid up and suits were instituted against the others.

The Rubber Tire Association

Another organization formed for conserving the interests of the Tillinghast licensees was the Rubber Tire Association, formally instituted in New York on September 17, 1896, as the outgrowth of a preliminary meeting in May that year of leading manufacturers of bicycle tires in the United States. The chief purpose of this association was to deal with the troublesome question of tire guarantees—a feature of the trade that, owing to abuses, interfered very materially with the making of profits by the tire people.

Colonel Dodge was elected president of the association; L. K. McClymonds and George T. Perkins, vice-presidents; Kirk Brown, secretary; and George F. Hodgman, treasurer. A standard form of tire guarantee, known as the "Association guarantee," was adopted. A meeting in March, 1897, attended by representatives of sixteen firms, discussed the question of adopting a standard size and form of bicycle wheel rim.

At the second annual meeting, in October, 1897, the officers were re-elected and a less liberal guarantee proposed, which, after conference with the National Board of Trade of Cycle Manufacturers, went into effect. This guarantee was re-adopted at a meeting in October, 1898. The Rubber Tire Association continued for some years to deal with the question of guarantees, until gradually the claims made upon the manufacturers for replacements and the like became less onerous, and finally went out of existence. It was concerned only with bicycle tires.

European Field Entered

At the beginning of 1898 arrangements were made for the more extensive introduction of single tube tires into Europe, through the concerted action of the Hartford Rubber Works Co., The B. F. Goodrich Co., and the Boston Woven Hose & Rubber Co. For this purpose the Single Tube Tire Co. was incorporated in New Jersey, with $100,-

000 capital. Theodore A. Dodge was elected president; H. C. Corson, of the Goodrich company, treasurer; R. M. Howison, general manager; and Ernest E. Buckleton, general sales agent. Offices were opened in London, where business was reorganized after a while as The Single Tube Tires, Limited, and finally merged with the European house of The B. F. Goodrich Co.

The G. & J. Suits

The clincher tire in America was developed under the patents granted to Thomas B. Jeffery. These were assigned to the Gormully & Jeffery Manufacturing Co., a bicycle making concern. Later they passed, with that company, under the control of the American Bicycle Co. When this company disposed of its tire manufacturing interest to the Indianapolis Rubber Co., which passed under the control of the Rubber Goods Manufacturing Co., a subsidiary company was formed by the latter to control the Jeffery patents and to manufacture and sell under its own name tires for cycles and motor cars. This new firm was called the G. & J. Tire Co., and was incorporated in New Jersey in November, 1899, with $1,000,000 capital authorized. The tires sold by this company were made at the factory of the Indianapolis Rubber Co., which was greatly enlarged. Later the United States Rubber Co., became interested through its purchase of control of the Rubber Goods Manufacturing Co., and in 1910, the interests of the G. & J. Tire Co. and the Indianapolis Rubber Co., were merged, the former assuming all liabilities of the latter.

The G. & J. patents were as follows:

No. 454,115, to T. B. Jeffery, issued June 16, 1891.

No. 466,565, to T. B. Jeffery, issued January 5, 1892.

No. 466,789, to T. B. Jeffery, issued January 12, 1892.

No. 523,314, to T. B. Jeffery, issued July 17, 1894.

No. 558,956, to T. B. Jeffery, issued April 28, 1896.

No. 493,160, applied for October 6, 1891; issued March 7, 1893 to William Holding, of Manchester, England, assignor to Charles Macintosh & Co., Limited.

The G. & J. bicycle tires were made originally for the proprietors by The B. F. Goodrich Co., who took out a license for making them also for the trade. On August 28, 1902, papers were filed in the United States Circuit Court in the Southern district of New York, by the G. & J. Tire Co., against the Diamond Rubber Co., in a suit for infringement of the patents above described. Shortly afterward the Diamond company took out a license from the G. & J. Tire Co., and most of the leading tire companies did the same.

As mentioned elsewhere, tires made and sold in Great Britain by the G. & J. company were held to be an infringement of the Bartlett clincher tire patent in that country. And the proprietors of the Bartlett tire, on undertaking to do business in America, were successfully proceeded against at law here by the G. & J. company.

There existed for some time in the United States a G. & J. Tire Association—a "pool" of the licensed manufacturers under the G. & J. patents. An agreement was reached as to the volume of production each year, and to the percentage to be produced by each member of the pool. In case any manufacturer exceeded his allotment, a certain percentage on the excess sales was paid into the funds of the association. The management of the pool was in the hands of a commissioner, a lawyer in New York, reputed to have held a similar relation to many other industrial pools. There was also an agreement to maintain

G & J CLINCHER TIRE—1906

prices. One important result of the association's work was the standardization of tire sizes with regard to the weight of load to be carried. The G. & J. Tire Association ceased to exist on September 1, 1906, but this had no bearing upon the question of the continued payment of royalties until the expiration of the G. & J. patents in 1908 and subsequent years.

For several years the G. & J. patents had been respected by most of the American tire manufacturers, although suits were pending against certain makers who refused to pay royalties. The first decision to be recorded in these cases was that in the case filed in the United States Circuit Court for the western district of Pennsylvania in May, 1905, against the Pennsylvania Rubber Co. The suit charged infringement, in the manufacture of automobile tires, of four patents issued to Thomas B. Jeffery and owned by the plaintiff company as follows:

Nos. 454,115, 466,565, 523,314 and 558,956. The respondent contended that the patents were invalid and denied infringement, and on September 9, 1907, Judge Joseph Buffington dismissed the bill of complaint.

In a lengthy review he held that all the patents involved antedated the automobile art and contemplated use on bicycles. Affirming that a pneumatic tire for vehicles embodies an inner inflatable tube protected by a flexible sheath, and agreeing that the four patents all related to the engagement of such an external sheath to the rim of the vehicle wheel, he pointed out that the wording of the claims in the first patent regarding the hooked edges of the tire sheath and the corresponding hooks in the rim was such that "if the disclosure of that patent comprised all the instruction of the tire maker of to-day, it is evident that the art would not teach the method followed by both respondent and complainant in the manufacture of a modern automobile tire." The court was unable to construe this Jeffery patent, with its specific form of hook connection, so as to make it cover the respondent's device. Not only was it found to differ from the description in the patent, but even the complainant had departed from the original hooked engagement and followed the same method as the defendant, which was similar to that described in the patent of William Golding, No. 493,160, dated March 7, 1893. This patent had also been owned by the G. & J. Tire Co., but had expired and become public property before the defendants began the production of such tires. This decision was appealed from to the United States Circuit Court of Appeals for the third circuit, and in April, 1908, Judge James B. Holland, of Philadelphia, affirmed the decision of the lower court.

When the G. & J. patents expired there was ended the only remaining incentive tire manufacturers had to form a close alliance or anything approaching a combination in restraint of trade.

The Schrader Patent

On May 26, 1906, a suit was filed by the Boston Woven Hose & Rubber Co. against the Pennsylvania Rubber Co. for infringement of United States Patent No. 466,577, issued January 5, 1892, to Frederick Schrader, of Philadelphia.

The invention covered by the Schrader patent related to a flexible inflatable tire capable of being readily and securely fastened to the wheel. Under the specifications the tire could be made in various forms. The rim was made with a central annular groove, with annular grooves on each side, which serve as pockets for the reception of the tire cover. On the inner side of each edge of the cover was an annular

groove, the two serving for the reception of a flexible plate or band, designed to stiffen under tension, as by the inflation of the inner tube. Various means are specified for drawing together the ends of the securing band, for holding the tire more securely in position, and for providing for the inflation of the tire.

A decision was rendered by Judge Brown in the United States Circuit Court for the District of Massachusetts, who held that the defendant was not using an invention made by Schrader, and that Schrader did not anticipate in any degree the principle of the modern pneumatic clincher tire. Later this decision was sustained by the United States Circuit Court of Appeals. Had this patent been upheld,

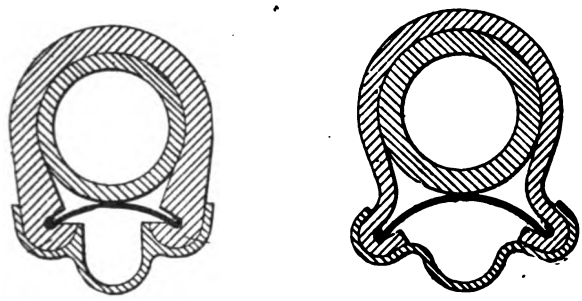

TIRE CROSS SECTIONS—SCHRADER'S PATENT

its scope might have been broad enough to have affected the status of all tires of the clincher or like types except those held on rims solely by the fact of inflation. The patent terminated on January 5, 1909.

MIDGLEY TREAD SUIT

Studded treads as well as tires were for a time somewhat involved in litigation, the most important case perhaps being that of the Metallic Rubber Tire Co., of Jersey City, against the Hartford Rubber Works Co. This suit, filed in the United States Circuit Court at Hartford, March 5, 1908, alleged infringement, by the Midgley nonskid tread, of United States Patent No. 609,320, issued August 16, 1898, to Dr. Calvin Thayer Adams, of New York, of which the plaintiffs were owners. The patent related to the principle of a metal studded leather tread for rubber tires. It covered "a vehicle tire," and more specifically a bicycle tire; a claim having been eliminated which had been previously made in respect to a tire with wire interwoven on the tread. In the suit brought, this latter claim was substantially renewed. The case was decided for the defendants, indicating

that inventions relating to bicycles which may be later applied to automobiles will not be regarded with much weight in litigated cases.

In the United States Court at Pittsburgh, Pennsylvania, on November 23, 1914, Judge Charles P. Orr granted an injunction against the Automobile Supplies Co., of Pittsburgh, and the East Palestine Rubber Co., with offices in Pittsburgh, restraining them from infringing the patents rights of the Midgley Tire & Rubber Co. In the application the Midgley company alleged that the defendants had advertised extensively that they had acquired license to make the Midgley tire, and were offering to sell this tire at cost to persons purchasing stock in the East Palestine Rubber Co.

The application further alleged that the Midgley company held the exclusive patent rights to this form of tire, which had been sustained by the Supreme Court of the United States, and that the Midgley company had built a large factory at Lancaster, Ohio, to manufacture the Midgley non-skid tire. It was charged that numerous automobile owners had actually bought stock in the East Palestine Rubber Co. in the belief that this would enable them to buy the Midgley tire at cost.

It developed from the testimony of the general manager of the Automobile Supplies Co. that his company had no connection whatever with the East Palestine Rubber Co., or with the sale of its stock. He admitted, however, that the tire held by the court to be an infringement might have been delivered from his store room.

Keaton Tread Suit

Early in 1915 the Keaton Tire & Rubber Co., of San Francisco, California, filed a suit in the Federal Court at Akron, Ohio, against the Swinehart Tire & Rubber Co., of that city, alleging infringement of the Keaton non-skid tread, invented by Robert Keaton and patented by the Keaton company in 1910. The complaint charged that the Swinehart company had been making tires with this tread and that the damages suffered by the Keaton company by reason of this alleged infringement amounted to not less than $50,000. An injunction, costs and damages were demanded.

Basic Patents Expire

With the expiration of the basic patents covering the single and double tube pneumatic tire principle, patent litigation was devoted chiefly to new methods and machinery employed in tire building, and to improved rims and rim fastenings, although tire fillers, tire covers, air gages, puncture fluids, portable emergency vulcanizers,

anti-skid tires and treads, blow-out patches, etc., were all involved more or less in litigation.

Thropp Mold Suits

In 1909 John E. Thropp's Sons Co. brought suit against the Fisk Rubber Co. for infringement of United States Patent No. 822,561, issued to P. D. Thropp, June 5, 1906, which, it was alleged, covered the form of mold used in the manufacture of Fisk tire casings by the one-cure wrapped-tread process in open steam. This case was before the courts for nearly four years and aroused great interest because the process and the apparatus involved had been extensively used under license by several tire makers. In the District Court the claims of the patent were held invalid by anticipation, and early in 1913 this decision was affirmed by the Circuit Court of Appeals.

In the later case of the De Laski & Thropp Circular Woven Tire Co. against the United States Tire Co., in which new evidence was admitted, Judge Hand of the United States District Court of the Southern District of New York, upheld the former decisions that the patent was not valid. In reviewing the testimony he pointed out that the mold books, of The B. F. Goodrich Co. showed that open tire molds and double cure were used in 1905. Accepting the contention that Thropp made the molds he claimed in 1904, he ruled that neither curing nor semi-curing were practiced in any part of the tire that was not in contact with the mold. He held that Thropp's press of 1904 was antedated by the Fisk cold press of 1903 and 1904.

On appeal the decree of the lower court was affirmed, it being held that the "date of invention" of a patented device is the date when the invention in its entirety, as patented, was conceived.

The United States Circuit Court of Appeals for the Third Circuit affirmed the decree of the United States District Court for the District of New Jersey, in the case of The De Laski & Thropp Circular Woven Tire Co. vs. William R. Thropp & Son's. In this litigation, which involved United States Patent No. 1,011,450, owned by The De Laski & Thropp Circular Woven Tire Co., and covering a tire wrapping machine, the lower court held that the patent was valid and was infringed by the tire wrapping machine manufactured by the William R. Thropp & Son's Co., Trenton, New Jersey.

In affirming this decision the Court of Appeals held in effect that this machine was the first in the art adapted to hold the mold members in position on the tire while it is being wrapped, thus doing away with the necessity of bolting or clamping the mold sections together before the wrapping operation.

State Core Suit

On December 5, 1910, the Goodyear Tire & Rubber Co. filed a suit against the Hood Rubber Co. for infringement of United States Patent No. 865,064, granted to Will C. State, September 3, 1907, and owned by the Goodyear company. This patent covered a core with a plurality of segments that abutted against each other. It had beaded inner flanges and two rings channeled to fit them. The sections were assembled and bolted firmly together by the rings.

It was asserted by the plaintiff that the State patent covered all types of cores used in the manufacture of detachable tires having substantially non-extensible edges and comprising a plurality of independent sections held in ring formation by one or more rings overlapping the inner portions of the sections. The court found, however, that prior to the invention of this core by State, substantially the same construction had been in commercial use at the plant of The B. F. Goodrich Co., and had also been in general use by the Fisk Rubber Co. in the manufacture of detachable tires, having substantially non-extensible edges. Early in 1915 Judge Dodge of the United District Court for the District of Massachusetts held invalid all of the claims of this patent, a decision of much moment to manufacturers of detachable tires and tire cores.

A similar suit against the Ajax-Grieb Rubber Co., Trenton, New Jersey, was likewise dismissed by Judge Thomas G. Haight in the United States District Court of New Jersey.

Seiberling-Stevens-State Tire Building Machine Suits

An important series of suits, as a result of which millions of dollars annually were saved by automobile manufacturers, were those relating to the alleged basic patents of Seiberling, Stevens and State for a tire making machine which provided methods for so stretching and forming straight fabric that it would take a cylindrical shape. These were United States Patents Nos. 725,135 and 726,561, granted to Seiberling and Stevens in 1904, and No. 941,962, granted to W. C. State in 1909, all of which were owned by the Goodyear Tire & Rubber Co.

In 1914 suit was brought by that company, through its president, F. A. Seiberling, against the Firestone Tire & Rubber Co., charging infringement. The case was tried in the District Court of Cleveland, Ohio, both the Goodyear tire machine and the Firestone tire machine being set up in the court room and operated in order to demonstrate the manufacture of the casings to the presiding judge, John M.

Killets. Some twelve months later the court decided the case in favor of the Goodyear company, giving the patents referred to such a comprehensive meaning that all tire manufacturers would have had to pay tribute to the Goodyear company in the shape of royalties if the verdict had been sustained.

The Firestone company appealed the case, furnishing bonds higher than ever before recorded in patent litigation. After the appeal had been argued in the higher court, early in 1917, but before a decision had been rendered, new evidence was introduced relating to a patent granted to an inventor named Mathern in Belgium in 1906. In the basement of the Cincinnati Post Office the Goodyear and Firestone machines were again set up and also a reproduction of the Mathern machine, using framework and many parts loaned by the Hood Rubber Co., of Watertown, Massachusetts, they having bought this machine from Mathern in 1909. The full bench of judges adjourned court to the basement to witness the working of the machines and then took the case under advisement for a year.

On December 13, 1918, a decision was handed down pronouncing the alleged basic patents to be invalid for want of invention, as well as for lack of combination. The Firestone company was freed from all charge of infringement, the decree of the District Court was reversed, and the record was remanded to the lower court with instructions to dismiss the bill.

Tire Inventors Keep Patent Office Busy

To-day the rubber tire represents the field in rubber invention which is most prolific in patents. Enormous sums have been paid for rubber tire patents or have been collected in royalties under such patents. But few patentees of a rubber tire have grown wealthy in consequence. The fact is that out of thousands of tire patents, the principle involved in a score or less has proved of commanding importance, and whoever happened to own the patents at the proper time to share in the development of the trade has profited financially—some of them very largely. But this does not imply any lack of justice, on the parts of governments or tire makers, to the inventors involved.

Few Patentees Grow Wealthy

Thomson, the English inventor, who brought out the first pneumatic rubber tire nearly three-quarters of a century ago, was so far ahead of his time that he and his patent were actually forgotten before a commercial demand for pneumatic tires existed. When the time was ripe for such tires, and inventors began to recognize the demand, their applications for patents in many cases were denied

on the ground of anticipation by Thomson. Thomson himself never profited a penny by his invention. Millions of tires based upon the Thomson principle have yielded profits to somebody. Of course, there have been later inventors who have profited from patents on improvements on the crude fastening or retaining devices suggested by Thomson.

As for Dunlop, who had never heard of Thomson when he took out a patent, his tire, though it was the original basis of a great tire company, was never really subject matter for a valid patent. And Dunlop's own tire soon dropped out of sight. The tire on which his company really founded its business was made under the Welch patent, covering the principle of attachment by means of two inextensible wires, engaging a suitably grooved rim, but not necessarily for a pneumatic tire. Not even Welch had in mind the modern pneumatic tire. His specification did mention, in one of eighteen claims, the applicability of his device to a tire made on Thomson's principle, and this one claim eventually survived and became the basis of the Dunlop monopoly. But did this make Welch the inventor of the perfected tire marketed by the Dunlop organization?

So with the "clincher" tire. Neither the American nor the British patentee of this type of tire specified any such tire as is actually made to-day. Patents were taken out and sustained in some countries and denied in other countries. The "clincher" tire was standardized throughout the world, and became the leading type in pneumatics for small automobiles and motorcycles. But no one man—no two men—can be named as the inventors.

Certain tire inventors have obtained handsome rewards under their patents which are not to be begrudged them. But the real development has been the work of hundreds, or thousands of persons, in rubber factories, automobile factories, among automobilists, and possibly elsewhere—the result of endless painstaking experimentation, with a view to overcoming defects and weaknesses and to making tires equal to new requirements, unforeseen by the original inventors.

Proposed Tire Legislation

In 1911-12, three states, one Eastern, one Western, and one Southern, attempted legislation prescribing that rubber goods bear the date of manufacture, and providing fines for non-observance of such law. In two states pneumatic tires only were specified; in the third, however, all rubber goods were to be thus branded. That the laws failed to pass is a matter of some moment, but of still greater concern was the attitude displayed by the framers toward rubber products.

The New York bill, which passed the Assembly but died in the Senate, read as follows: Motor vehicle tires to be dated. No person or corporation shall sell, offer or expose for sale at retail in this state a tire for use on a motor vehicle manufactured after January first, nineteen hundred and thirteen, unless the year when such tire was manufactured shall be impressed or branded upon the material whereof such tire is constructed. Every person or corporation violating this section shall be liable to a penalty of fifty dollars for every tire sold, offered or exposed for sale in violation thereof, recoverable in a civil action by any person who will sue for the same, one-half whereof shall be paid to the state treasurer. Such penalties shall be cumulative and more than one penalty may be recovered in the same action by the same person in any court of competent jurisdiction.

The bill from a rubber standpoint was most absurd. It classified rubber goods as perishable articles the same as milk and eggs. It ignored the fact that vulcanized rubber outwears wood, stone and steel; that it is the toughest, the most abused, and, as a general rule, the most lasting of any substance used to-day in the arts. Its life is brief under some conditions, but that of any other substance under the same conditions would be briefer. Nor does it perish in proportion any more quickly than do other substances. What is needed is intelligent handling and care. The law would have worked to the extreme disadvantage of tire manufacturers without benefiting the users. The meaning of the law would be that a tire which was one or two years old would be inferior to one which bore a much later date, when in fact, the former is often far superior to the new product. The opinion is unanimous among manufacturers that a tire's efficiency increases with its age up to one year, and if stored in a dark place under correct temperature conditions there is no discernible deterioration up to three years.

Apart from that, such laws are capable of acting both ways, and it is conceivable that the tire manufacturer would be able to make out a good case by declining to take any responsibility for a faulty tire casing on the ground of age, notwithstanding the fact that it had been properly stored, resulting in the rubber being in even better condition for wearing than when it left his factory.

Rubber Tires Made Automobile Development Possible

The rapid development and remarkable popularity of the automobile in the United States has made American tire manufacture the great industry it is to-day. But it is a safe assertion that, without rubber tires for wheels, the automobile as we now know it would never have been developed. Progress in automobile building—as relates

to size, weight, speed and the safety and dependability of automobiling —has advanced only so fast as the rubber manufacturer has succeeded in producing tires capable of withstanding the increasingly heavy strains placed upon them. Rubber men have more than kept pace with car designers and manufacturers in their share in the evolution of the automobile.

In the first recorded automobile race, no competing builder was willing to have his car equipped with rubber tires. But a rubber manufacturer who was determined to have elastic treads tested, built a car himself for which his factory supplied the tires. No less than 26 tires were burst in running that car 621 miles, and the result discouraged the use of rubber for this purpose for some time. But the automobiles of that period were all unsatisfactory, for reasons which disappeared only when, through the efforts of rubber men, resilient tires were produced that could be depended on.

An Equivalent for Fair Roads Everywhere

Now that the automobiles in use are numbered by the millions, who sees one without rubber tires? They are used as a matter of course, and bought as an every-day commodity. Punctures occur occasionally, of course, but considering the great number of tires in use and the mileage they cover, the average amount of tire trouble is surprisingly small. In fact, pneumatic tires withstand hard treatment and accidents quite as well as the remainder of the vehicle, if not better, because the rubber is elastic whereas the steel is not.

Good roads are desirable for automobiling, but not so much for rubber tires as for the rest of the machine. The great merit of the rubber tire is that it supplies the equivalent of at least a fair road wherever it is driven and so carries the automobile to many places where it would otherwise be unavailable.

Tire Quality Average Steadily Rising

Good as they are, the best rubber tires yet made doubtless are not perfect; the maximum severity of requirement on the part of motorists has not been reached, nor probably has the supreme development of manufacture been achieved. Even for present requirements the live rubber tire maker is constantly busying his faculties to bring out a stronger, more durable and more trustworthy product. With the advantageous crude rubber market due to rapidly increasing plantation production a lower percentage of reclaimed rubber is finding its way into tires and the number of low grade tires being manufactured is decreasing in proportion to the total.

CHAPTER IV

INDIA RUBBER, WILD AND CULTIVATED

THERE is, perhaps, no substance used in the arts to-day about which so little is known to the layman as india rubber. That a certain amount of information about the gum, however, is of value to all who use tires is incontrovertible.

Its Origin as a Tropical Product

The common belief that india rubber comes from the sap of a tree is an error. It is a white, milky juice, contained in the bark and is totally distinct from the sap. Rubber trees are found in the tropics the

Tapping Pará Rubber Trees on a Sumatra Plantation

world over, and embrace many hundreds of species, only a few, however, producing rubber of commercial value.

How It Is Gathered and Marketed

The bulk of the rubber supply known as Pará rubber comes from plantations in the Far East, and from trees that grow wild in great abundance in the valley of the Amazon. Rubber is gathered by the native workers who cut into the spongy bark of the tree, collect the rubber milk in cups, coagulate it in a variety of ways and ship it to factors

in different centers, who in turn export it to such great markets as New York and London.

Sources of Rubber

Fine Pará rubber comes in a great variety of shapes, the wild in biscuits, the plantation in sheets. Coarse Pará, which is wild rubber scrap, takes the form of strings and uneven bits bound together into balls, known as "negroheads." From Central America come slabs of rubber almost black, and rather dirty; from Africa, little balls and spindles, frequently adulterated with bark and chips, and so on—differ-

Gathering Rubber Latex in Malaya

ent localities shipping rubber in different shapes and conditions, and under many names. The rubber itself varies widely in value, so that in order to bring out of such crude materials, goods that are up to the standard in resilience and durability, the manufacturer has before him a problem of no mean proportions.

Trees Not Destroyed in Procuring Rubber

Just here it may be well to explode another popular fallacy. For some reason the belief seems to be prevalent that ignorant natives the world over destroy the trees in procuring the rubber. This is only true to a degree. The rubber that is gathered from the vast basin of the

Amazon comes from a tree that produces more rubber by constant tapping than could possibly be obtained by cutting the tree down; hence the trees are carefully preserved.

A Plantation Factory in Sumatra

Cultivated Rubber in the Far East

The great yield, however, comes from the enormous plantations of Pará rubber trees that have been established in Ceylon, the Federated Malay States, Sumatra, Java and other tropical sections operated by

Blocking and Baling Plantation Rubber

native labor under white overseers. At the present time these plantations are producing about ten times more rubber than the entire valley of the Amazon. But the wonderful expansion of the rubber manufac-

turing business is always making a demand that constantly encroaches upon the supply, and while there is no danger of a rubber famine, it is certain that all of the rubber produced will be needed for some years to come. Manufacturers want it for tires, for boots and shoes, for insulated wire, for surgical goods, for clothing, for belting and hose, and other innumerable uses.

Rubber is Not Gutta Percha

It may be well here to explode still another popular fallacy; rubber is not gutta percha, never has been and never will be. Gutta percha is a plastic substance that comes from the milky juice of a tree,

(C) *Underwood & Underwood, N. Y.*

Weighing Crude Rubber at New York

to be sure, but it has no elasticity, no resilience, and cannot be vulcanized.

Synthetic Rubber Not Yet a Price Competitor

Here a word about synthetic rubber may be timely. Real, artificial, or synthetic rubber has been produced. In 1912 the head of a great German chemical firm showed to an audience of New York chemists, automobile tires made wholly of synthetic rubber. Moreover, these tires had not only been on actual wheels, but had carried an automobile

of weight and proportions 4,000 miles and were still intact and unpunctured; in fact, apparently little worn and full of promise for many miles more.

But there were only two sets of these synthetic tires in existence. Just what these two sets of tires cost, no one could state accurately, but reflecting that the chemists started out five years previously on this synthetic quest, and further reflecting that these eight tires represented virtually the only tangible and utilizable fruits of their efforts—apart, of course, from their scientific value—it is obvious that they came rather high. Since then experiment has continued, but no synthetic

PLANTATION RUBBER SAMPLES

tires have been marketed, nor has synthetic rubber been used when natural rubber was available.

Notable progress in the production and use of synthetic rubber was made by German chemists during the World War, and while some tires and other goods of synthetic rubber helped in a measure to meet the emergency in Germany caused by lack of natural rubber, nothing was accomplished to reduce the world's continued demand for the tree product.

CHAPTER V

PRELIMINARIES IN RUBBER MANUFACTURE

JUST as the baker takes flour, water, salt and yeast, makes dough and bakes it, so does the rubber manufacturer take rubber, sulphur and various powders, make dough and bake it. Roughly, that is the whole process. There is no melting as so many believe. It is simply a matter of baking with a sticky gum as a foundation that during the baking changes into an "unsticky" gum, which is also more elastic than it was before, and indeed, has added to itself a score of valuable qualities.

Rubber, sulphur, baking—that is the whole story.

As the baker, by putting different materials into his dough, produces not only bread, but biscuits, cakes, pies and the like, so the rubber manufacturer adds to his dough to make tires, rubber belts, packing or hot-water bottles.

For example, if cheapness is desired, whiting is put in; if toughness, zinc oxide; if slipperiness, plumbago; if heat-resisting quality, powdered asbestos, and so on *ad infinitum*.

Soft rubber contains but little sulphur and is baked but a short time. Hard rubber, or vulcanite, contains much sulphur and is baked many hours.

Washing and Drying Crude Rubber

When the crude rubber reaches the manufacturer, it is full of impurities which must be washed out. So it is run through the washer, a sturdy machine consisting of two corrugated rolls turning towards each other; and as they chew the lump into a ragged sheet a stream of water washes away the dirt. When clean, the thin sheets are hung up in a slightly heated room until bone dry, or the moisture is extracted by a vacuum dryer. Then, and not until then, is it ready for mixing.

Mixing, Making Up and Vulcanizing

In this sheet form it is tough and harsh to the touch and does not suggest a dough at all. But when run again and again around one smooth roll of the mixing mill, it becomes soft, slightly sticky, and readily takes up almost any ingredient that is to be mixed with it.

When the mixture is complete, the mass is rolled up in the form of a cylinder. To be able to use it, the mass must be rolled out into sheets. This is done by huge calenders, which are heavy steam-heated rolls that squeeze it into sheets on cloth aprons, when it is ready for cutting up into shapes that are parts of the finished article. These parts are put together with rubber cement; the article is placed in a

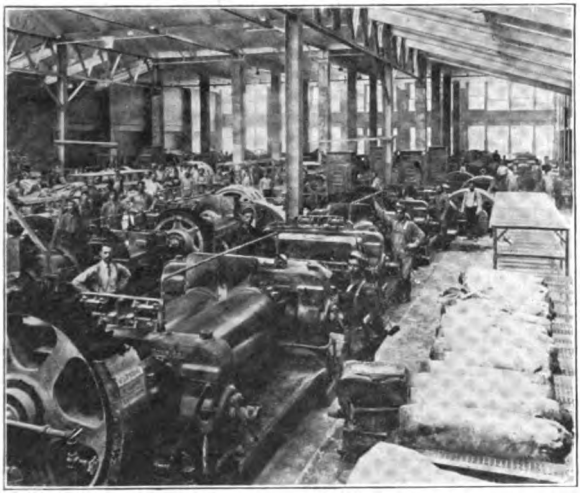

BATTERY OF MIXING MILLS

mold or about a mandrel to give it shape, and placed in a steam vulcanizing chamber.

The layman believes that anyone who is making rubber goods understands all lines of rubber manufacture. The exact reverse is true, as the business has divided itself into many distinct industries.

VARIOUS DIVISIONS OF THE RUBBER TRADE

One of the most important of these to-day is that of the rubber tire. Even this division of the industry separates itself again into two parts quite distinct from one another—solid tires for motor trucks, cabs, carriages, etc., and pneumatic tires for automobiles, motorcycles and bicycles. Separate factories are operated for each and an expert in one may have only a scanty knowledge of the other. The tire, it is well to remember, belongs to the great general division known as mechanical rubber goods, which embraces belting, packing, hose, valves, matting, and a thousand minor articles used in connection with engineering and manufacturing.

Rubber shoe making is another separate industry. Compounds, machinery, and baking ovens are all different than for other lines, and the most skillful rubber shoe manufacturer may know nothing about the manufacture of tires.

Insulated wire—the rubber type—calls for still different treatment in compounding, in machinery and in baking.

Great factories devoted only to the manufacture of hard rubber goods turn out telephone receivers, fountain pens, combs and like goods, and the makers know little about other lines.

The factories that produce water bottles, atomizers, and physicians' supplies, pass as druggists' sundries manufactories and confine themselves as a rule to that line only.

Rubber clothing, automobile tops, carriage drills, balloon fabrics and similar goods, form still another division of the great industry.

Specially prepared rubber for the use of the dentist and the rubber stamp manufacturer have their own formulas, skilled employes, and separate factories.

The dress shield is a tiny thing as compared with a huge grain elevator belt, but factories are equipped for its manufacture alone and the yearly product is very large.

The preparation of rubber cement by putting rubber into solution, preferably with naphtha, is an industry by itself, the product being sold in thousand-barrel lots.

Thus this great business, so remarkably divided, touches almost every industry and profession, indeed reaches in some way every individual. That is, perhaps, what makes it one of the least known, most misunderstood, and at the same time the most fascinating of all the manufacturing trades.

A Modern Tire Plant Layout

In planning a modern tire factory there are many problems to be considered that involve the best engineering practice combined with practical knowledge of tire building. There is also a great difference of opinion on important points as to the method of manufacture and also the layout of a modern tire factory. The following layout of a modern tire plant by M. A. Pearson appeared as an article in *The India Rubber World*.

Large modern plants have three to six-story building units and, to accommodate their phenomenal growth of the past few years, changes in the location of departments have been frequent. One of the first companies to manufacture pneumatic tires is now erecting a large plant at Buffalo on the one floor plan. This method, of course, is very

practical but a considerable area of land is required to build a plant on this plan for large production. A smaller plant will produce much better results in a building about 80 feet wide, 280 to 300 feet long and two to three stories high. If the machines required for the manufacture of pneumatic tires and tubes are laid out properly the maximum production can be reached and there will be very little lost motion throughout the entire plant. A material saving can be effected, moreover, by the use of gravity.

Location

The plant should be located close to ample water supply and economical electric current should be available. The water should be analyzed to discover if it has any undesirable properties. It is also

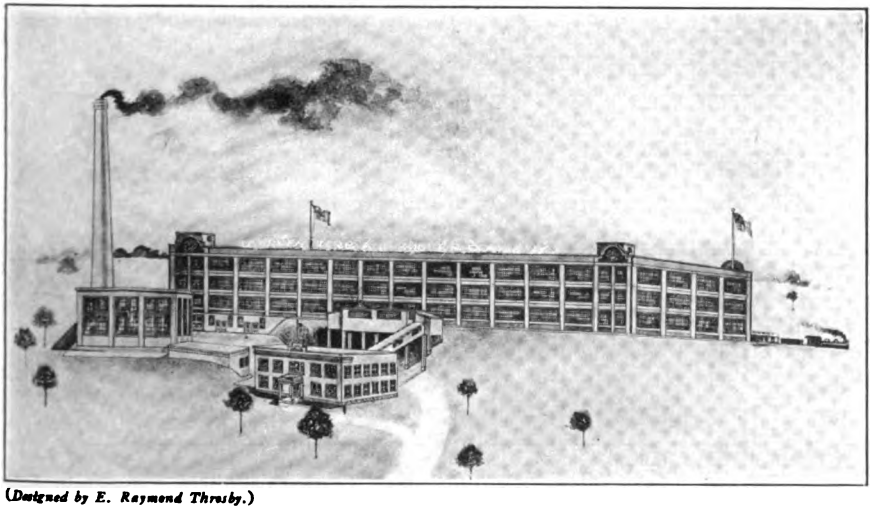

(*Designed by E. Raymond Throsby.*)

Perspective View of a Modern Tire Plant

desirable to locate the plant near the railroad, so that a siding can be obtained as well as advertising to the traveling public.

In many instances an ample water supply is not available when all other points that have to be considered in the location, such as transportation facilities, etc., are met with. In such cases there can be installed what is known as a spray or cooling pond, connected to the city mains and the water cooled and used over again.

Power, Heat and Light

It is generally found to be more economical to buy electric power, the higher voltages being stepped down by transformers which should

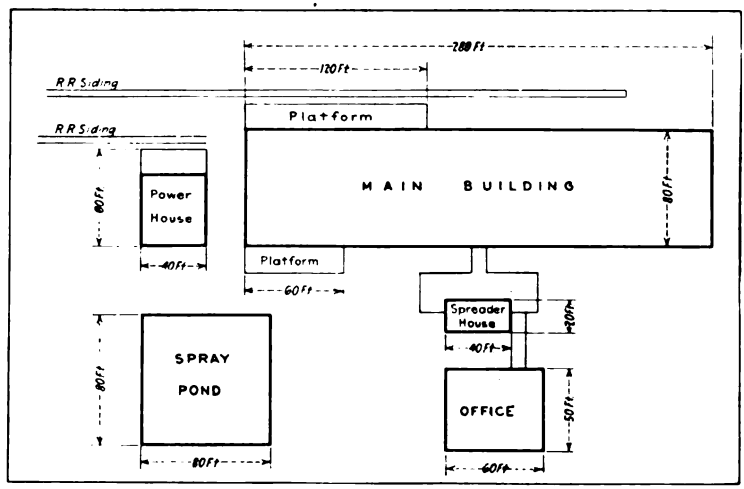

Ground Plan

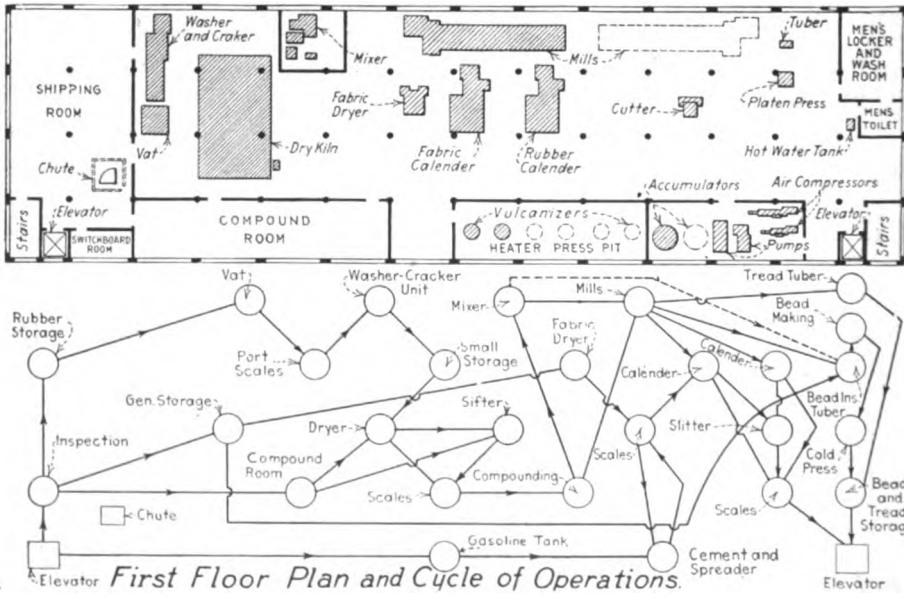

First Floor Plan and Cycle of Operations.

be placed in a fireproof building. Alternating current is satisfactory for all purposes except calenders where two-voltage direct current is necessary to give a 4 to 1 speed range. The same applies to tubing machines for which variable speeds are preferable, where direct drives are applied. For direct current a motor generator set or rotary converter is necessary. The rotary converter is more economical and efficient but more difficult to repair under ordinary conditions.

Other power house equipment includes boilers of sufficient capacity to supply steam for heater presses, vulcanizers, mills, calenders, dryers, pumps and heating.

The lighting required is a good industrial lighting unit with the exception of around the calenders, where a special unit is required so that there will be sufficient light both in front and back of the calenders. The lighting unit for the plant as outlined is one light to a bay, the bays being 20 feet square.

FIRST FLOOR

Washing Room

For a daily production of 450 tires using 25 per cent of wild rubber, two 16 by 36-inch cracker-washers can wash the rubber in six hours. The initial washer installation should consist of one 16 by 36-inch machine with a 75-h.p. drive suitable for a future cracker-washer of the same size. A soaking vat, cutting machine, and drying apparatus will complete the washing room equipment.

Mill and Calender Room

The mill line should consist of a unit of three 22 and 20 by 60-inch mills with a 250-h.p. drive. Mill No. 1 to be used for breaking down and mixing. Mill No. 2 for mixing and mill No. 3 for mixing and warming up the calender stock. A mixer located next to the mill unit can be used to advantage in preparing rubber for the mills.

The calender should be not less than a 24 by 66-inch 3-roll machine with a 100-h.p. drive. The delivery speed ranges from 10 to 40 yards per minute for which a 100-h.p. direct current, two-voltage variable-speed motor is used.

Additional equipment includes fabric dryers, tube machines for beads and treads, cooling tables, stock bins, sifting machines, etc. Endless cable bead wire has met with almost universal success and can be purchased in the various sizes. A machine has been developed that should be installed for insulating the bead wire.

The fabric dryer is a three-roll reversible machine operated from one side and requires very little floor space. This should be located at

the rear of the calender. One 3-inch tubing machine with a 7½-h.p. alternating-current motor drive easily cares for all bead requirements. A 6-inch tubing machine will provide enough treads for all sizes up to and including 6-inch. A 25-h.p. variable-speed direct-current motor is used.

Hydraulic Plant

The accumulators, pumps and air compressors are located in the main building adjacent to the heater presses.

Spreader Building

The spreading or impregnating of fabric must be done in an absolutely fireproof building. The cement-mixing room must also be separated from the spreader room by a fire wall. Equipment for this department should include churns and impregnating machines.

SECOND FLOOR

The second floor is devoted entirely to building, curing, and finishing casings. The necessary equipment will include one bias-cutting machine, heater presses, tire-building stands, cores, molds, tables, etc.

Mold and Core Equipment

This element is of great importance. In designing a non-skid tread considerable expense can be saved by using a design which will eliminate, as far as possible, all hand work in connection with the manufacture of the mold. This can often be done without affecting the qualities of the non-skid design. Collapsible cores are used, and as air bags are necessary for curing cord tubes, a complete mold equipment for their manufacture should be installed. Additional equipment will include base rings for molds, bead placing rings and bead molds.

Emergency Room

The emergency or hospital room is located on this floor, adjacent to the elevator. While the more serious accidents occur in the mill and calender room on the main floor, minor accidents are more frequent on the second and third floors.

THIRD FLOOR

Tube Making Equipment

The third floor is devoted entirely to tubes. The tube vulcanizer should be equipped with extra inside carriages and transfer carriages to secure full production. Wrapping and stripping lathes, skiving

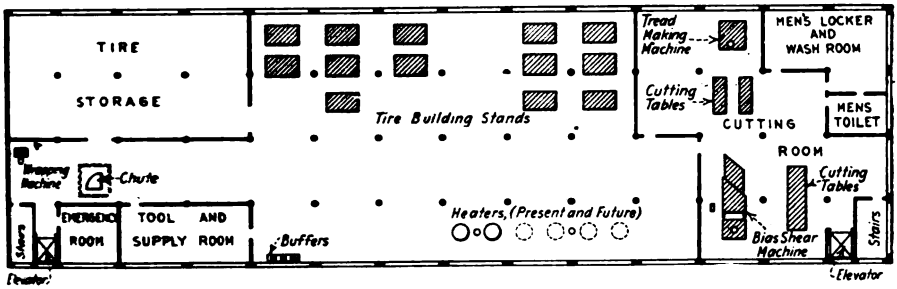

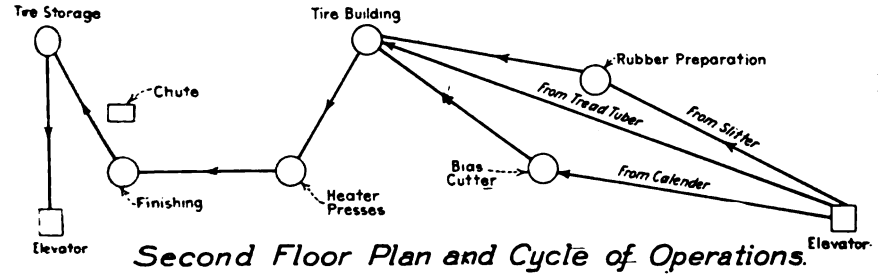

Second Floor Plan and Cycle of Operations.

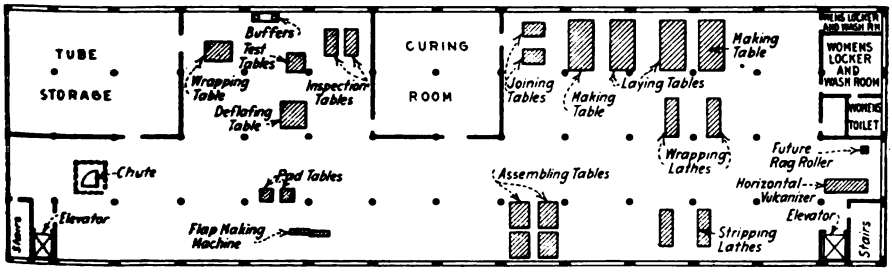

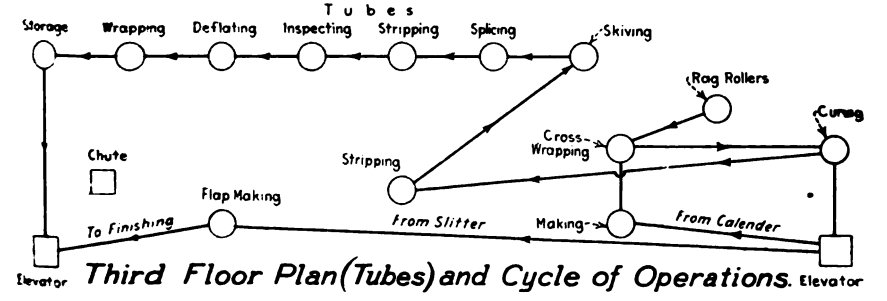

Third Floor Plan (Tubes) and Cycle of Operations.

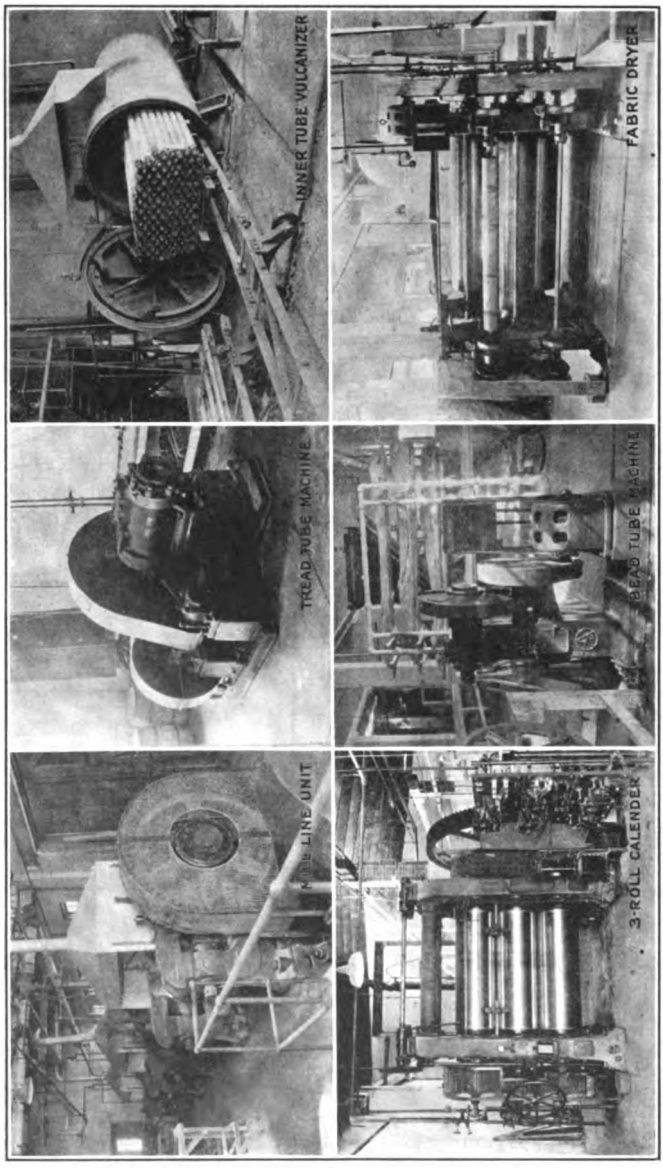

INTERIOR VIEWS IN A MODERN TIRE AND TUBE PLANT

machines, nut tighteners, flap machine and deflating machines are all necessary equipment. Building tables and splicing equipment, where the acid cure is used, can be built at the plant.

The plant here outlined provides for an initial capacity of 500 casings and tubes per day and is designed for an ultimate capacity of 2,000 tires a day without any material changes in the building. Additional equipment and three shifts will be necessary to reach this production. Below are outlined the various operations from receiving to shipping room, showing the machinery, connections and small tools required for each operation, and followed by pertinent remarks.

Progress of Fabric

As soon as the fabric is received it should be inspected and tested to see if it meets with specifications. After inspection the fabric is placed in general storage; from thence it is taken to the fabric dryer to eliminate all moisture. After the drying operation the cord fabric should be weighed before sending to the spreading room and it should also be weighed after the spreading operation. The fabric is taken from the fabric dryer to the calender, and impregnated fabric is also sent direct from the spreading room to the calenders. After the calender operation the fabric is sent to the cutting and slitting machines to be cut into proper sizes for building tires.

Routing of Rubber

The rubber after being inspected and weighed is stored in the basement, which provides a cool, dry place. As needed it is taken to the washing room. It is not the practice of some manufacturers to wash plantation rubber, as they claim that washing and subsequent drying weakens the rubber. However, if it is not thoroughly washed there is the chance that some foreign matter or fermentation will remain in the rubber, eventually causing trouble. Constantly improving methods of handling plantation rubber may possibly in the future eliminate the washing operation.

When the rubber has been broken down and finally sheeted, it is placed in storage until it is ready for the dryer. From the dryer it goes to the scales—and from there to the compound room, where it is apportioned to the various compounds and sent to the mixer or breaking down and mixing mills. From the mixing and warming mills the stock is sent to the calenders and to the tube machines. From the calenders the sheeted stock is delivered to the slitting machines for preparation for tubes while the frictioned fabric goes to the slitting machines and cutting tables.

OUTLINE OF COMPLETE OPERATIONS

Operation	Machinery	Connections	Small Tools	Remarks
Receiving room.	1 dormant scale, 1,000 pounds capacity.	.....	Saw, hatchet, hammer, cold chisel, hand hooks, crow bars, hand trucks.	The scale is required to weigh all material received by the factory.
Inspection table.	.....	.....	....	All material received should be inspected before entering the factory.
Compound room.	.....	.....	.....	Fairly large room. Uniform temperature should be kept at all times.
Rubber storage.	.....	.....	.....	Located in the basement. Should be cool and protected from the sun.
General fabric storage.	.....	.....	.....	An inspecting machine should be installed which would also measure fabric so that claims could be made in case of shortages.
Fabric drying.	3-roll reversible fabric dryer.	Steam.	.....	.....
Cement and spreader.	Battery of three 200-gallon churns and 16-foot spreader or impregnating machine with double coil.	.....	Gas can, cement cans, scoop pans, knife, scissors, castor truck.	This should be in a separate building, absolutely fireproof, divided by fire-wall. The equipment should not be direct-drive type on account of the fire hazard. A motor is located in a small pent house to operate both churns and spreader by belt drive.
Gas storage.	1,000-gallon tank, also pump.	.....	Gas cans, funnels.	.....
Vat.	Poured concrete, waterproofed, made in any desirable shape.	Steam and water.	.....	For soaking rubber.
Weighing.	Portable platform scales.	.....	.....	.....
Cracker and washer.	Two 16 by 36-inch cracker-washers direct 75-h.p. drive.	Steam and water.	.....	This operation is very important as it is imperative that certain grades of rubber should be sheeted as finely as possible to eliminate all foreign matters.
Small storage.	.....	.....	.....	Rubber is stored and placed on racks before going to the drying room.
Drying.	Dry kiln.	Steam and water.	Baskets and wheel truck.	.....
Sifting.	Sifters.	.....	Compound pans.	Sifting pigments is a very important operation. It is also desirable to dry pigments especially when received in bags instead of barrels. Some pigments collect moisture rapidly.

OUTLINE OF COMPLETE OPERATIONS, Continued

Operation	Machinery	Connections	Small Tools	Remarks
Weighing.	Three table scales.	.....	.....	.....
Compounding.	Long table racks.	.....	Wheel trucks, knives, scoops, scissors, compound pans, small pans.	.....
Mixing.	Mixer.	Steam and water.	Wheel truck and compound pans.	.....
Milling and warming.	1 unit of three 22 by 20 by 60-inch mills direct 250-h.p. drive.	Steam and water.	Mill knives, butcher knives.	Mill No. 1 to be used for breaking down and mixing. Mill No. 2 for mixing and mill No. 3 for mixing and warming up stock for calender.
Frictioning, etc.	1—24 by 66-inch, 3-roll calender, 100-h.p. direct drive. The delivery speed ranges from 10 to 40 yards per minute.	Steam and water.	Knives, scissors, 2 hand trucks with cradles, 2 cradle trucks.	.....
Weighing.	Portable platform scales.	.....	.....	.....
Cutting and slitting.	Cutting and slitting machine, direct 5-h.p. drive.	.....	Knives, scissors, truck.	The machine is used for cutting rubber for tubes, side walls, cushions, etc., for tires.
Weighing.	Portable scale.	.....	.....	.....
Fabric cutting.	Bias cutter, cutting tables, stock racks, liner cleaners, liner wind-up.	.....	Books, liners, knives, stitchers, scissors, etc.	.....
Rubber preparation.	Tables.	.....	.....	.....
Tread making.	6-inch tuber, 25-h.p. direct drive.	Water and steam.	Books, scrap boxes, scrap truck.	.....
Bead making.	Cold press with hot platen.	Water and steam.	.....	.....
Insulating.	3-inch direct-drive tubing machine.	Gas, water and steam.	.....	.....
Bead making.	Bead machine, stand for bead reels, table, bead-covering device.	.....	Scissors, knives, rack for reels.	.....
Bead storage.	Bead drums, racks.	.....	.....	.....
Tire building.	Building stands, cores, stock racks, stripping table, tool boxes, stand for finished tires.		Rollers, stitchers, knives, scissors, etc. Gas cans, cement cans, wrenches, hammer, scrap boxes, core racks, base rings, racks, wheel truck.	
	Four Jacks.	.....		.....

OUTLINE OF COMPLETE OPERATIONS, Continued

Operation	Machinery	Connections	Small Tools	Remarks
Vulcanizing.	Heater presses, 2 accumulators, temperature controller stand for molds, overhead trolley.	Air, steam, and water.	Wrenches, cracking bars, stripping bars, soapstone can, brushes, etc., molds, rings, etc.	.....
Finishing tires.	Buffing, painting, wrapping, trimming.	Air.	Swabs, brushes, knives, hand trucks, scissors, etc.	.....
Tire and tube storage.	Storage racks, scales.	.....	.....	This room is located on the second floor directly above the shipping room. All windows are painted a dark color so that a cool, uniform temperature may be maintained at all times.
Tube making.	Poles, stock racks, pole storage, cross stands, making tables, pad table.	.....	Die for cutting pads, knives, scissors, rollers, stitchers.	.....
Cross wrapping.	Wrapping machine, 3-h.p. direct drive.	.....	.....	.....
Tube curing.	Horizontal vulcanizer, temperature controller.	Steam, air, and water.	.....	.....
Tube stripping.	Stripping lathe.	Air.	.....	.....
Tube buffing.	1 skiving machine, valve inserter, nut tighteners direct drive, fractional h.p. required.	.....	Gage for joint.	.....
Tube splicing.	Splicing mandrels, splicing stands.	Air.	Acid cans, brushes, etc.	.....
Tube stripping.	Portable racks.	.....	.....	.....
Inspecting.	Tank.	Water and air.	.....	.....
Deflating.	Deflating machine, vacuum pump.	.....	.....	.....
Wrapping.	Table.	.....	.....	Tube wrapping for shipping.
Flap making.	Flap machine, flap molds, tables.	.....	Jack, scissors, knives, dies, etc.	.....
Rag rolling.	Rag roller, direct 1-h.p. drive.	Water.	.....	Works in conjunction with stripping lathes.
General stock room, 2nd floor.	Racks, bins, tables, scales.	.....	.....	.....

Summary

From the above it will be noted that the first operation starts in the basement of the building and the final operation ends there. This department is used for both receiving and shipping. It will also be noted that the majority of the operations are performed on the first floor and located in the most suitable place to allow for expansion at any time, that is, installing additional mill lines, calenders, etc.

It will also be noted that all materials move in one direction on the first floor and on the second and third floors they move in the opposite direction so that the finished materials will arrive directly above the shipping and receiving room. An elevator and chute are located at this end so that all materials can be easily handled.

The repair and maintenance department is located in the basement. A laboratory for testing and experimenting is almost a necessity and can be located on the second floor or adjacent to the factory superintendent's office.

Equipment for these two departments will vary depending on the amount of work of this character that it is desirable to accomplish in the initial unit.

Preliminaries in Automobile Tire Manufacture

The automobile tire is, of course, only a very large cycle tire; that is, generally speaking. It involves problems in the way of making up, vulcanizing, and, indeed, structural form, however, that make it a much more complicated and difficult product to manufacture than the bicycle tire.

Routing Materials Through the Factory

A few words about the tire plant in general are appropriate here. The efficient manufacture of tires presupposes not only adequate machinery but a properly arranged factory. Tire building is a highly specialized branch of the rubber industry in which keen competition requires every practical economy of operation.

The following diagram showing the usual routing of material through a modern tire plant is a key to the location of the store rooms, drying rooms, working departments, machinery, tools and equipment, which will be so placed and arranged as to permit of a progression of the crude rubber, compounding ingredients and fabric step by step through the necessary processes from the raw state to the finished tire casing and inner tube with the least possible deviation from a straight line of progress. While the plan will not invariably meet all conditions, it serves as a useful and typical preliminary guide to the floor

layout of machinery and equipment in a new mill, in which the buildings are designed to fit the equipment, and not the reverse as has often been the case.

In the practical application of this or any modified routing plan the future must also be considered with a view to subsequent enlargement with but little disturbance of the existing plant, always keeping

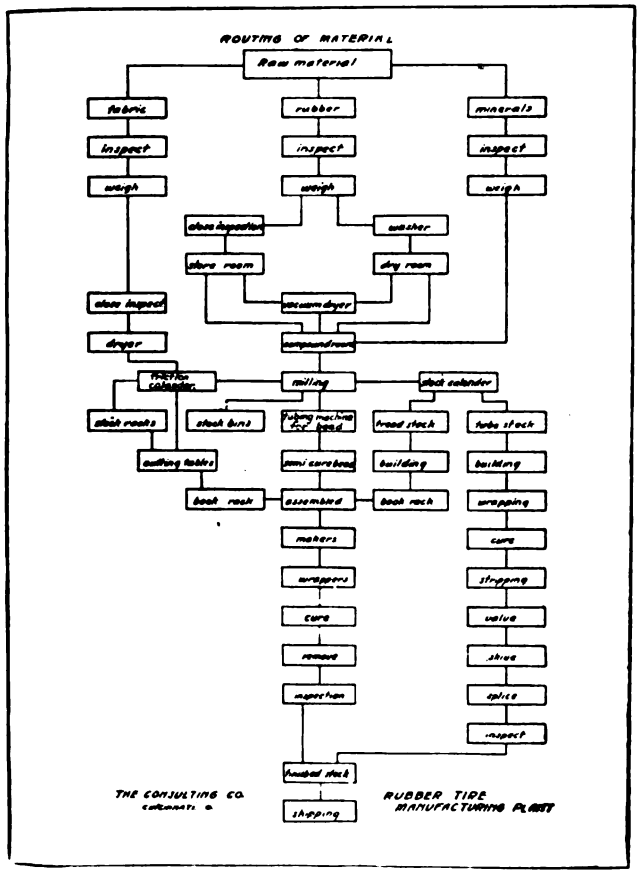

ROUTING OF MATERIALS IN A MODERN TIRE PLANT

in view low costs; decreased damaged stocks and finished goods; full time and consistent production from the worker, and maximum output from the machinery. These factors assist very materially towards success, and a well designed and organized plant makes this easily possible.

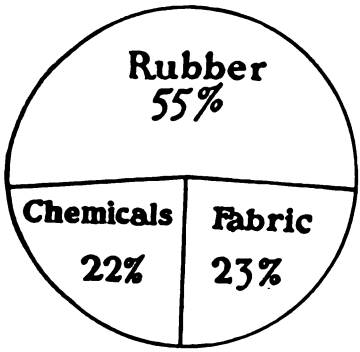

Fig. 1

Approximate distribution of materials in gross weight of tire during 1917.

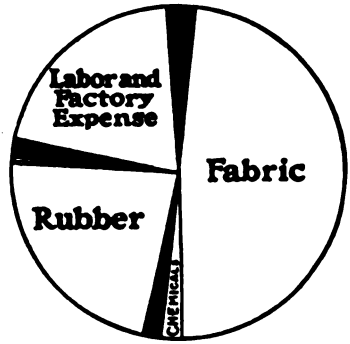

Fig. 2

Approximate distribution of cost items in a finished tire of January, 1917. Factory cost is used as basis. Marketing and transportation expense not included. Shaded lines allow a variation of 5 per cent in either direction.

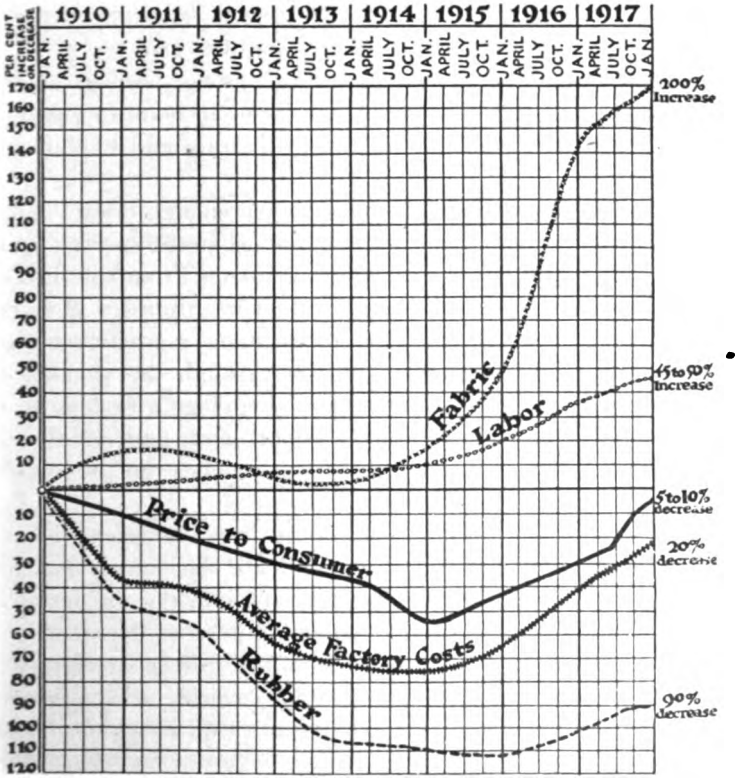

Fig. 3

Relative changes during the last seven years in the price of tires with that of the materials from which they are made.

Factors Governing Tire Costs

Tire costs fluctuate constantly with the raw material market, and any attempt to determine the distribution of cost in the manufacture of a tire must be based on a formula indicating what the tire consists of. The product of different factories differs somewhat, but an average tire is now made up of approximately 55 per cent rubber, 23 per cent fabric and 22 per cent chemicals. To these must be added labor and factory expense, the most variable items of cost due to local and internal factory conditions. Low priced labor and high factory efficiency can make this one of the least factors to be considered, whereas high priced labor combined with low factory efficiency might increase it to 40 per cent of the total cost. In 1917 the approximate distribution of cost items in a finished tire was as follows: fabric, 55 per cent; rubber, 20 per cent; labor and factory expense, 22 per cent; chemicals, 3 per cent. At the end of 1919 the advance in fabric, labor and chemical costs and the drop in rubber had readjusted the schedule somewhat.

Raw Material Cost Accounting

The progressive cost of raw materials has not been given the consideration or thought that this important factor in manufacturing really deserves. For that reason the following diagram and explanation are of interest:

The smaller rubber factories rarely give enough credit to wastage in their cost accounting. Raw material, of whatever nature, in rubber manufacture, is undergoing a constant shrinkage from the day the car is unloaded to the time the finished product is shipped. It is possible in time, from previous experience, to estimate a predetermined percentage for shrinkage as material passes through the various departments. But to check this predetermined shrinkage a system of reports should be made to the cost accounting department, and rigidly adhered to, thereby stopping many a leak before it reaches the proportion of a flood and finally becomes disastrous.

In the diagram opposite, the solid lines between the departments are represented by circles and indicate the travel, step by step, of the material through the various processes into the finished product. The dotted lines, between the departments and cost department represent a system of reports that are made to the cost department or main accounting department, as the case may be, covering what passed out of the particular department making the report, and to which department the material reported upon was delivered.

Thus the main office accounting department would have absolute control of factory costs through an accurate system of accounting that

would show the cost of raw materials consumed in production, with full consideration of the shrinkage in process.

Washers and Washing

In the manufacture of rubber goods of whatever kind the first preparatory operation required by crude rubber, from wild sources, is washing for the purpose of freeing it from the usual assortment of mechanical impurities, such as wood, bark, leaves and sand or other

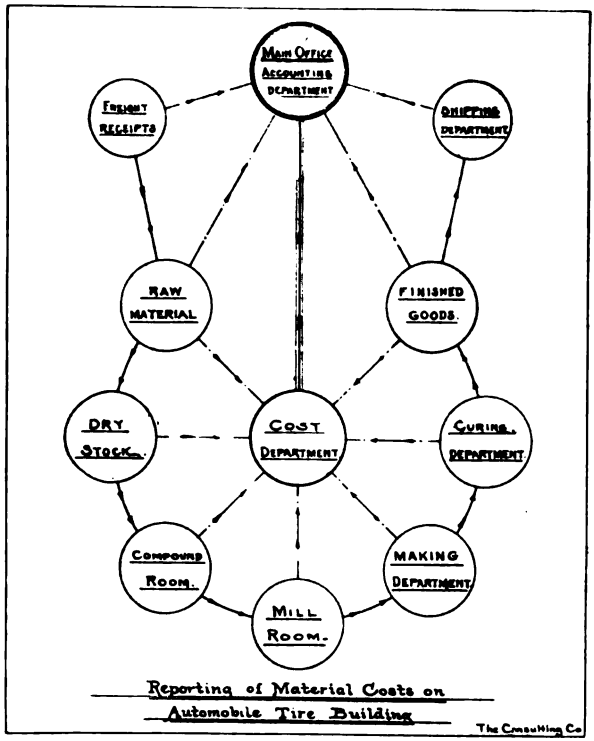

Raw Material Cost Accounting Chart

such materials, besides removing various liquid and soluble impurities. This preliminary work takes place in the "wash room" of the factory.

The rubber is brought from the cool store-rooms where it is kept until needed, cut into pieces and soaked for some hours in a tank of warm water for softening and the liberation of loosely adhering impurities. When crude rubber is removed from the case, it is a difficult matter to separate the rubber sheets, while the baled rubber is

often a solid mass. For reducing the rubber to pieces convenient for the washing machines, a power rubber cutter combines the power hack-saw principle with mechanical features necessary in a machine, for slicing crude rubber of all sorts.

It is of the horizontal type with direct-connected motor, or belt drive, and special gearing for actuating the sickle blade that reciprocates in a guide. A spiked vise, 28 inches between the jaws and 24 inches high holds the block of rubber while a film of water is distributed to all parts of the blade to facilitate the cutting operation. If a hard foreign substance should be encountered in the rubber, a relief is automatically applied which offsets the machine and prevents breakage.

From the soaking tank the rubber is passed to the washing machines. These are of two types, the tub washer and the roll washer.

PEERLESS RUBBER CUTTER

The tub washer is the sort of machine employed in paper making, known as a hollander. It is used for preliminary washing of scrappy rubber containing bark and sand, such as Manicoba and African sorts. The tub washer consists of a large oval tank provided with a central partition disconnected from the ends of the tank, thus allowing the water to circulate freely by the action of a rapidly revolving paddle-wheel provided with cutting blades set at an angle and working adjustably against a dam placed across one side. The barky and sandy rubber is thrown into the tank and cut by the revolving blades against the dam as it floats continuously past during the washing process. The rubber is more or less finely cut by the process and the liberated sand and bark are free either to settle to the bottom of the tank or to float through the overflow, which is screened to retain the floating mass of

partly cleaned rubber. The rubber is then put through a roll washer for final washing and sheeting.

Roll Washers

Rubber washers consist of a pair of fluted or pyramidal studded rolls in housings running together in a horizontal plane and adjustable, as to distance apart, by heavy screws worked against the bearing boxes of the front roll. One roll revolves considerably faster than the other. Suspended over the rolls and discharging into the opening between them is an arrangement of piping for water. The flow of both can be regu-

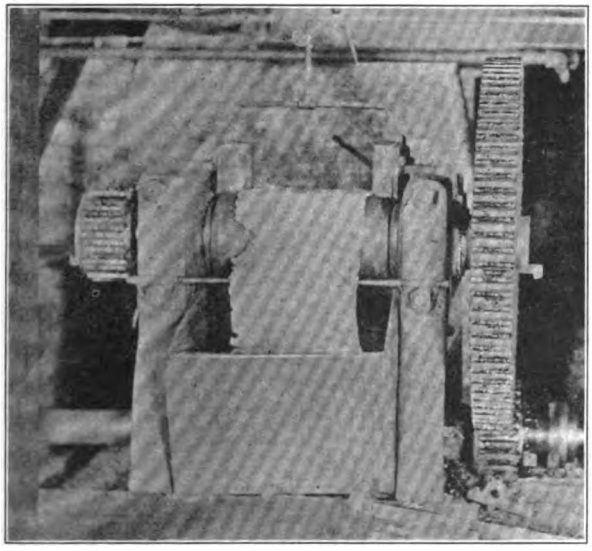

Washing Crude Rubber

[Showing a roll washer through which rubber is passed again and again until washed and formed into sheets]

lated for temperature and volume as it descends onto the rubber being cleansed. In the case of fairly clean rubbers the roll washer is all that is necessary to remove the impurities. In the case of rubbers treated in the tub washer the roll washer is necessary for the final cleaning.

The rubber is fed between the rolls several times, broken down into a coarse, spongy mass, the water washing out all the sand, bark and dirt. Plantation sorts and fine Pará work out into a coarse sheet in this machine, whereas African and some other rubbers fall apart, drop down in chunks and are fed into the washer a number of times until sheeted.

Sheeting Mill

The rubber sheeter stands next to the roll washer. It is piped for water and is similar in design except that it has only one grooved roll working very close to a smooth one. The purpose of the sheeter is to reduce the thick rough sheet of washed rubber from the washer to a long, thin sheet suitable for hanging in the drying room or placing in a vacuum dryer.

Drying

Before rubber can be used in the manufacture of rubber goods it must be thoroughly dried, as any moisture in it would generate steam during vulcanization and cause blisters in the goods. Sheeted crude

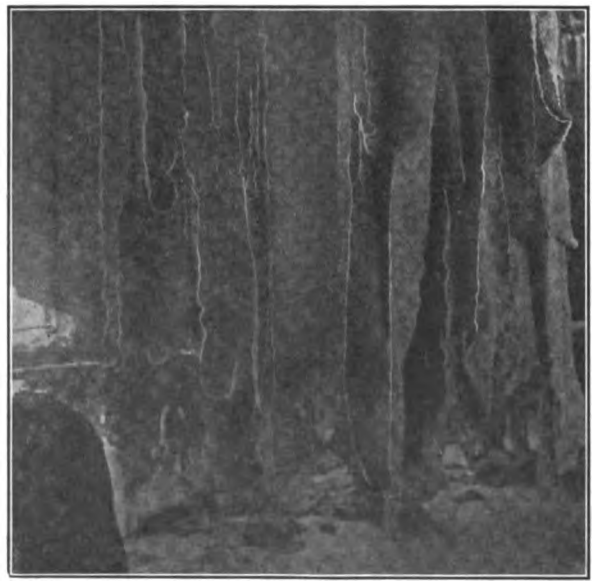

Air Drying Crude Rubber
[Washed sheets hanging from rods near the ceiling and exposed to a current of warm air until thoroughly dry]

rubber is commonly dried by two different methods. High grade gums are usually hung over horizontal poles in a hot air drying room for two to three days to as many weeks or even months, while low grade rubbers are placed on shelves.

Carll's rubber stock cooling rack, shown opposite, has a capacity of about 400 pounds of tire stock with each loading, or about 800 pounds per hour. The size is 30¾ by 62½ inches high, receiving 12 removable perforated steel trays 30 by 30 inches.

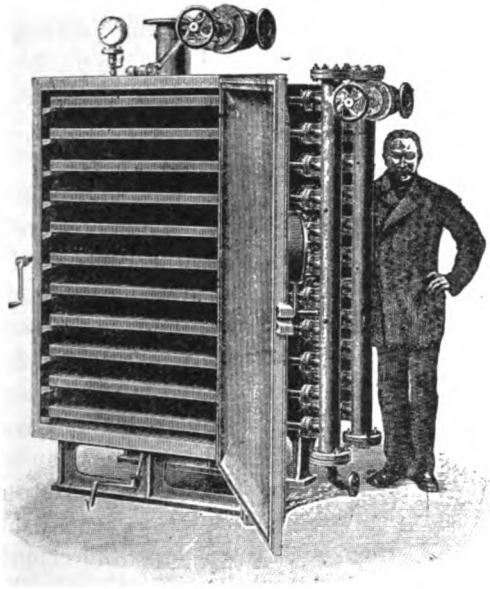

VACUUM DRYER FOR RAW RUBBER

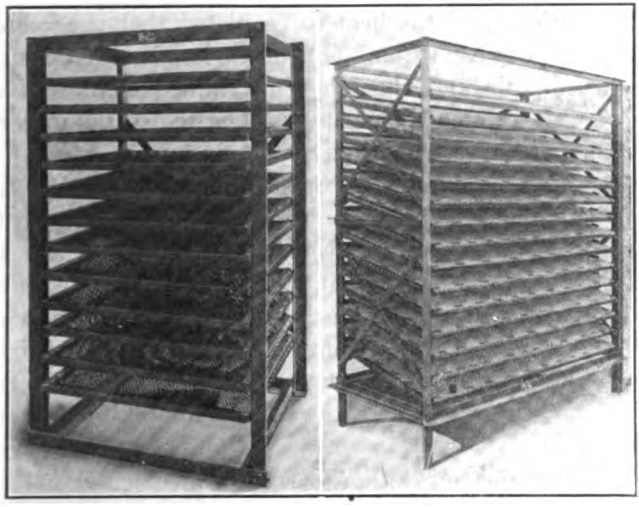

CARLL COOLING AND DRYING RACKS

The drying rack is designed for drying jelutong and pontianak stock, etc., and is particularly adapted for use in drying rooms. Its capacity is about 600 pounds of stock when filled; its size, 64 by 30 inches by 7 feet 11 inches high, receiving 15 trays 30 by 60 inches. Tray runs are pitched with the tray stops.

The temperature of the drying room is maintained at 90 to 100 degrees F. by means of wall steam coils. The poles are spaced in aisles to permit free circulation of air around the rubber. This unregulated method of drying has been modified by systematically circulating warm air through the drying chamber at a regulated temperature and humidity. Under this arrangement of definitely maintained drying conditions effective rubber drying can be accomplished much more quickly.

For most, if not all, rubber manufacturing purposes vacuum drying is effective and practical and much quicker than air drying. By this system the thin washed gum is laid on perforated metal trays which are fitted to slide between hollow steam heated shelves in an air-tight chamber. Air is then withdrawn from the chamber, the rubber being subjected to a vacuum of about 28 inches, and a temperature sufficient to cause the rapid evaporation of the moisture. On account of the lowering of the boiling point of water by the reduction of atmospheric pressure the usual drying temperature is 150-175 degrees F. Under such conditions rubber may be thoroughly dried in three or four hours without detrimental effect.

One of the first drying machines was the Hurricane. It was divided into sections and the heat so regulated that the rubber finally emerged in a cool, dry condition. One of the longitudinal compartments contains heating coils and the other an endless chain conveyor that carries the rubber through the machine. Located in the upper part are the fans producing the recirculation of the air.

The drying is accomplished in accordance with the well-known counter-flow principle. The rubber is slowly carried through the dryer by the conveyor. The general movement of the drying air is directly opposite to this, as the fresh dry air is admitted near the delivery end of the machine. The air is constantly recirculated by the fans, alternately through the rubber and steam coils, and progresses in a spiral manner through the machine. During this process, the temperature of the air is gradually raised and its capacity for taking up moisture is thereby increased.

With the Hunter dry kiln the rubber is exposed in humid air that is kept in circulation and provided with a continuous supply of fresh air. The temperature in the dry room is raised as high as 160

to 170 degrees F. and the rubber dried in 12 to 14 hours. It is claimed that rubber treated by this process, whether it has been previously dried or not, is of a better quality than when dried in the usual way.

A cross-section of the dryer is here shown. The air enters at *A* and rises, passing over the steam coils *B* supplied from pipe *C*. The heated air then passes through the upper chamber *D* and downward into

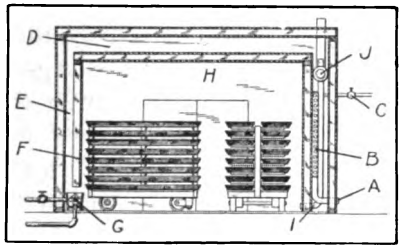

HUNTER DRY KILN

the compartment *E* where the air is deflected downward by the partition *F* and passes over the humidifier *G*, into the rubber treating chamber *H*. From here the air passes out of the dryer through pipe *I* and header *J* to the atmosphere, thus creating a constant circulation.

As the air passes over the surface of the water in the humidifier a certain amount of evaporation takes place, depending on the temperature of the water and the humidity of the air. The quantity and

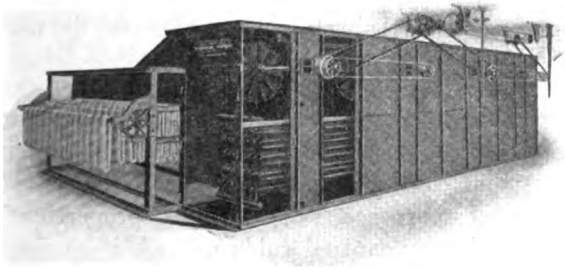

HURRICANE AUTOMATIC DRYING MACHINE

temperature of the water supply is automatically controlled so that the air entering the treating chamber is of uniform humidity. The best results are produced most quickly with an air temperature of 140 to 160 degrees F. and a relative humidity of 30 to 35 per cent.

The long trays containing the rubber to be dried are placed on special trucks and are rolled into the dry room, and it is claimed the relatively moist air and the relatively high temperature produces dried rubber of superior quality in a comparatively short time.

"Breaking Down"

Following the drying, the gum is massed or "broken down" on warm smooth mill rolls for the purpose of averaging any variations in the lot and securing uniformity of curing quality. The mills used for this purpose consist of smooth surfaced rolls geared to run at differential speeds to produce a grinding or mixing effect on the rubber. The rolls of rubber mixers, grinders, warmers and calenders are always made hollow and provided with piping allowing internal circulation of steam and water for regulation of the temperature to working condition.

Compounding

Up to this point the description has told how crude rubber lots are cleansed, dried and brought to a uniform average quality. This work is all preparatory and necessary because of variation in condition and quality existing among the numerous crude rubber sorts. This work brings the rubber into condition for the processes of compounding and mixing selected ingredients with the gum to change its physical characteristics. These changes obtained through vulcanization, are an increase of tensile strength, elasticity, ability to withstand abrasion and so forth. Much skill is involved in selecting and proportioning rubber and compounding ingredients to meet successfully essential and specified requirements both as to physical properties and the matter of price.

Changes Wrought by Vulcanization

In order to vulcanize rubber it is necessary to incorporate sulphur and subject the mixture to heat. Vulcanization is a chemical change within the mass that converts it from its original plastic condition to a tough, resilient substance possessing physical properties radically different from those of unvulcanized rubber.

Numerous compounding ingredients in addition to sulphur are incorporated with rubber before vulcanization, and a popular misconception exists as to the reasons for their use.

The "Pure Gum" Fallacy

There is often an expressed wish on the part of tire purchasers that they be assured that they are getting only "pure gum"; that is,

rubber with the simple addition of 6 per cent to 10 per cent of sulphur. This assurance is often given, but as a matter of fact they neither need nor should they receive pure gum. India rubber has the curious quality of assimilating almost all kinds of earths, metallic oxides, and even vegetable substances. From these it borrows colors and various qualities that are oftentimes of great advantage. Certain ingredients help the rubber to resist oils, others assist in delaying the destructive action of acids and hot water. Some earths give a soft putty-like consistency, while others make a compound hard and only slightly elastic. All of these peculiar attributes that rubber may take on are known to the manufacturers, and it is safe to say that to-day only a few adulterate tires for the mere sake of cheapening. They do not use pure gum, in the strict sense of the term, for the reason that it would not last as well as rubber combined with a percentage of metallic oxides that toughen the stock, increase its tensible strength and give it better resisting qualities without affecting its resilience. It is safe to say that there is not one successful manufacturer of tires to-day in the world, who has not, in spite of all his experience in the compounding and manipulation of rubber, been forced to make hundreds of experiments and learn by actual experience exactly what rules should be followed to enable him to turn out tires that give first-class service.

Color in Tire Stocks

In recent years the color of the rubber stock used in making tire casings has become a conspicuous feature. Some firms favor an all white, gray, black or red casing as the case may be, while others employ a different color for tread and side walls, as, for example, gray or red sidewalls with a black tread. Inner tubes, also, are found on the market in all of the colors mentioned. Motorists have been prone to attach too much importance to the influence of color upon the wearing quality of tires. Mineral fillers must be used in compounding rubber stocks suitable for tire building in order to toughen and impart additional wearing qualities to the rubber, and the color of the filler, a dry pigment, is imparted to the rubber dough by mixing. Just as the baker uses white flour for white bread and brown flour for brown bread, so the tire manufacturer uses as fillers zinc oxide for white tires, carbon black for black tires and antimony sulphuret for red tires. There are many other pigment fillers, but the principle remains the same. Color is really of little importance except as it serves to differentiate various makes of tires, or enables manufacturers to keep production costs as low as is consistent with good quality by taking advantage of changing market conditions in purchasing compounding ingredients.

The Compounding Room

After drying, the sheeted crude rubber is taken to the compounding room where the various ingredients are weighed out together with the required amount of rubber to make up a "batch", which is stored in a rack ready to be taken to the mill room for mixing.

The location, arrangement and equipment of the compounding room, if carefully planned, will greatly facilitate the work.

Location. The compounding room is on the same level and of easy access to the store room and rubber dry room and to the mixing room.

Arrangement. A suitable arrangement will comprise conveniently placed wall benches, shelving, and a line of bins for materials most frequently used. The middle of the room should be left free

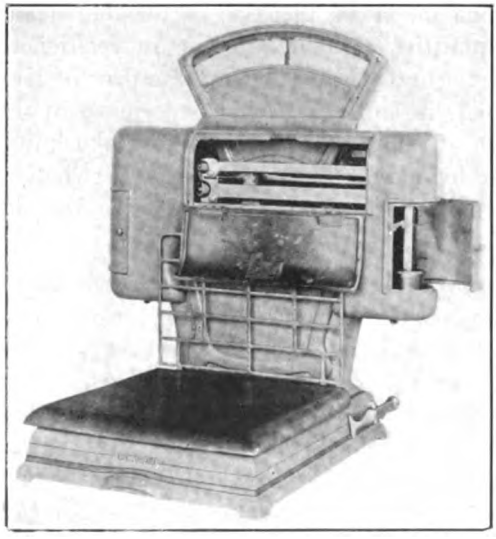

Detroit Automatic Compounding Scales

to contain the compound boxes in orderly arrangement to receive the stock batches as weighed.

Equipment. The weighing scales are a vibratory scale of 500 pounds capacity, an even balance scoop scale, capacity of 50 pounds, and a small even balance scale weighing to half or quarter ounces for sulphur and accelerators.

The automatic special scale for rubber compounding here pictured is of the predetermined weight type, having no graduations on the chart with the exception of a single reading line in the center. It

has two beams, the lower one of ten pounds capacity, graduated in ounces, and the upper of two pounds capacity, graduated either in quarter ounces or one one-hundredth pounds, as the formula requires. Extra counterpoise weights are furnished so that the total capacity of the scale is 102 pounds, and it will handle all ingredients from lamp black to rubber.

The entire beam and counterpoise mechanism is encased in a dust-proof aluminum housing having three doors; the upper door covering the beams being equipped with a Yale lock, the right-hand door covering the counterpoise, being so arranged that it cannot be opened except when the upper door is open, and the left-hand door opening into a compartment which may be used for the storage of weights. The scale is built upon the four-point principle of lever

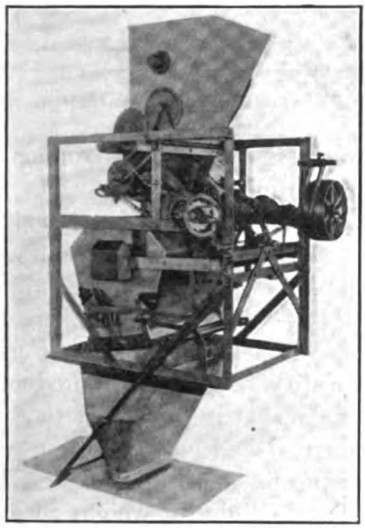

AUTOMATIC PIGMENT WEIGHER

construction, is without check or stabilizing mechanism of any description, has agate bearings throughout, and is exceptionally sensitive and accurate.

In large factories batteries of automatic weighing machines afford a swift, accurate and secretive weighing mechanism which works faster than any expert human weigher. A gang of these machines, as shown by the following installation plan, handles the ingredients that go to make up a compound, one machine weighing whiting, another litharge, still another sulphur, and so on. Each machine takes

its material from a bin, weighs it and delivers it into the compound boxes as they pass under each machine.

Strong galvanized sheet metal boxes of about 100 pounds capacity. with taper sides for nesting, are provided for weighed compounds.

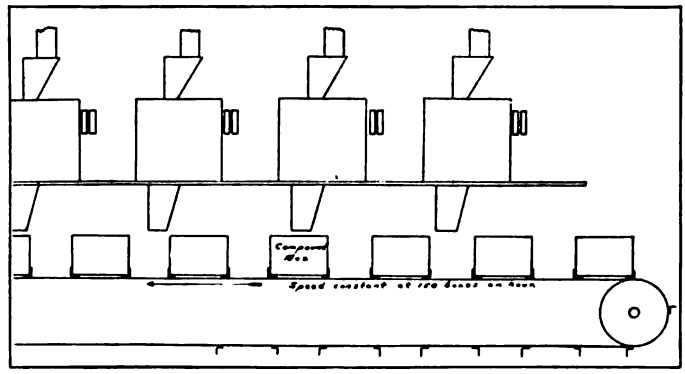

SECTION OF SIX-GANG COMPOUND WEIGHING INSTALLATION

An equal number of similarly shaped, much smaller metal boxes contain the weighings of sulphur.

Hand trucks for conveying boxes of weighed materials from compounding room to mixing room are also necessary. An assortment of the usual convenient hand tools, scoops, etc., is also called for.

Sifting machines have demonstrated their utility in removing trash, specks, or foreign matter from materials used in compounding, thereby insuring uniformity in the sifted product. The Rotex sifter shown opposite is unique in that it operates with a level rotary sieve motion and includes a patented ball cloth cleaning device making it particularly efficient in sifting fine, soft or sticky materials.

The sieve box is made light in weight to avoid excessive vibration and strongly braced to withstand the driving strains. The sieve motion is level and rotary at the head end, elliptical in the center and reciprocating at the extreme tail end. The sieves and also the dust cover frame which holds them in place are readily removed making the sifter box accessible for cleaning or changing sieves of different mesh. Each sieve consists of a frame having a sieve cloth on its upper side, a ball supporting screen on its lower side and a set of ball cloth cleaners. The balls are confined in pockets below the sifting cloth and being deflected upward by beveled divisions they strike the sieve cloths very lightly but frequently thereby cleaning the cloths without wearing them.

These machines are made in several sizes and capable of making the necessary number of separations in handling a wide range of materials. Not over ½ h. p. is required to operate the largest machine, while the smallest, which is designed for laboratory work, requires only ¼ h. p.

Motor Tire Compounds

The manufacture of motor tires presents many interesting and difficult problems, both mechanical and chemical, on the successful solution of which the value and endurance of the tire depends.

None of these problems is more vital than those involving the judicious selection and compounding of the rubber used. To secure the best results, questions of expense must be set aside and consideration given only to securing the best results attainable with the materials available.

The beginnings of success or failure are made in the compounding room, where the utmost skill of specially trained chemists is depended upon to maintain the quality of the building stocks, and whenever possible to improve the compounds. A serious mistake in com-

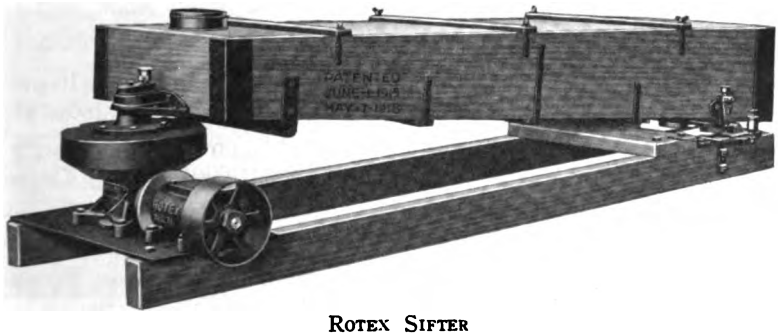

Rotex Sifter

pounding might cost six months in production so that eternal vigilance and conservatism must ever be the watchwords of successful tire compounding.

Five general compounds are used in making a pneumatic motor tire. They are the friction, cushion, side wall, tread and bead compounds. The function of each determines its make-up. Naturally the selection of rubber comes first, and in that connection it is well to consider the rubbers as divided into groups with relation to the qualities called for by the functions required in use.

Crude Rubber Groups

A general classification of crude rubbers may be made according to their range of tensile strength and percentage of resin contained. On this basis, naming only principal grades, groups may be made as follows:

Group 1. Firm rubbers of high tensile strength and low resin content, such as fine and medium Parás, and plantation first latex crêpe, smoked or unsmoked sheet or slab.

Group 2. Rubbers of medium tensile strength, and averaging less than five per cent of resin, such as coarse Pará amber grades of plantation, caucho and maniçoba.

Group 3. Rubbers of fair tensile strength and containing above five per cent of resin, such as Guayaquil and other Central American varieties, congo sorts, plantation rolled brown crêpe, Asiatic sorts and guayule.

Such a grouping, while not strictly scientific, assists in practical selection and a fair approximation to value by essential characteristics. In choice of individual grades in such groupings one must consider rapidity of rate of cure, best determined by test of individual rubbers, as it may not be safely assumed.

Compounding Ingredients

Some of the more generally used compounding ingredients in addition to sulphur and their effects on rubber are as follows:

Barytes is only a white diluent. It adds no useful property to any compound, and detracts from both the tensile strength and elongation. It causes a continuous decline in tensile strength until 35 volumes to 100 volumes of rubber is reached. It stands out, however, as having the least effect on the elongation of any of the most generally used inorganic compounding ingredients. The values obtained are not far from those secured with pure gum. Very large proportions, up to 150 volumes, can be incorporated with 100 volumes of rubber in a basic mixing before the stock would become unmanageable.

Lithopone is a filler used to whiten the stock that also causes a decided decrease in tensile, which falls off to about 2,400 pounds per square inch and then gradually declines. In respect to elongation of the stock it is next to barytes, its effect being slight.

Fossil flour is a pigment filler that, up to 30 volumes with 100 volumes of rubber renders a rubber compound definitely stiffer than one containing barytes. The fossil flour particle is smaller than the barytes particle, and after 30 volumes have been added to the mixing

there is probably an agglomeration of the particles into larger complexes, generating less rubber surface.

Tripoli, or infusorial earth, markedly affects both the tensile and elongation of the compound. It shows a maximum tensile above 3,000 pounds per square inch at 3 volumes to 100 volumes of rubber, after which there is a decided falling off, due perhaps to cutting action of the sharp particles. The elongation shows a gradual decrease with increased filler, the falling off being about the same as with magnesium carbonate and gas black.

Whiting is an inexpensive pigment filler that, up to 20 volumes with 100 volumes of rubber, shows some stiffening of the compound. Above this proportion agglomeration sets in and there are no beneficial effects on the physical properties.

Magnesium carbonate gives excellent results from 6 to 15 volumes to 100 volumes of rubber, but the stock falls off rapidly in tensile beyond the latter proportion. Elongation decreases gradually with increased filler, about the same as with Tripoli and gas black.

Glue is not a mere diluent like barytes, but, up to 20 volumes with 100 volumes of rubber, shows a definite stiffening or toughening action in a compound. The tensile at break is, however, lowered.

Gas black has a stiffening or toughening effect up to 20 volumes with 100 volumes of rubber, beyond which it remains practically constant until 30 volumes and then falls off slowly. While the stock shows increased tensile strength until 30 volumes of filler is reached, the correct tensile product declines above 20 volumes, thus indicating that the increase in tensile, as ordinarily figured, is more or less at the expense of elongation.

Zinc oxide shows a marked reinforcing or stiffening effect on the compound. The tensile strength at rupture comes to a maximum at 15 volumes with 100 volumes of rubber, and wearing power is improved. Beyond this, zinc oxide partakes of the characteristics of a diluent. The best white treads contain not much more than 20 volumes of zinc to 100 of rubber. The corrected tensile strength of the stock remains constant from 15 to 35 volumes, beyond which there is a decided falling off. This proportion can be taken as the maximum quantity which may be added without overloading. The corrected tensile product comes to a maximum at 11 volumes. The elongation does not show such a marked decline as most other fillers.

Red oxide of iron is a useful but sometimes treacherous pigment having a reinforcing action up to 15 volumes. Beyond this is agglomeration. The tensile does not hold up so well as with zinc oxide.

China clay vies with zinc oxide as a reinforcing agent, although the breaking tensile is less well maintained. Clays differ markedly according to their origin and colloidal condition, and 20 volumes as the maximum with 100 volumes of rubber must be regarded as an individual finding.

Lampblack, up to 20 volumes with 100 volumes of rubber, produces greater and greater toughness in a compound, and the breaking tensile holds up splendidly. There is none of the usual flabbiness at low elongations. A stock containing 20 volumes of lampblack possesses stress-strain properties resembling in type those of steel and other rigid bodies. It is not surprising that such a stock wears better as a tire tread than one made up even of zinc oxide or china clay.

Carbon black possesses reinforcing qualities unapproached by any other pigment. Instead of being diminished, or at best maintained, the breaking tensile is markedly improved. Linear stress-strain conditions begin early and continue unabated up to 40 volumes with 100 volumes of rubber.

Both lampblack and carbon black color the stock black and give desirable "grain" effects.

Lime used in small quantities hardens the rubber, hastens vulcanization, neutralizes moisture in the compound and, combining with free sulphur, modifies its continued action on the rubber.

Aniline oil is used for the same purpose as lime. It is a catalyzer that accelerates the combination of sulphur and rubber during vulcanization.

Antimony sulphide colors the stock red and vulcanizes it.

Litharge toughens rubber and hastens the cure, but can only be used in dark colored stock.

Barium sulphate is used as an inert filler and adds weight.

Substitutes, such as linseed oil products and mineral hydrocarbons, are utilized in certain compounds to soften uncured stocks and as fluxes. Accelerators, both the well known inorganic minerals and the new organic catalyzers, are utilized to hasten vulcanization.

Formulae for Tire Compounds

Beginning with the bead, the following is typical:

Semi-Hard Bead Compound

First latex crêpe rubber	20
Shoe reclaimed rubber	20
Litharge	15
Whiting	36
Sulphur	9

The hard yet slightly flexible quality is here obtained in part by limiting the rubber, but chiefly by the addition of litharge and sulphur in large amounts for their vulcanizing effect.

FRICTION AND SKIM FOR DUCK PLIES

Fine Pará rubber	40
Coarse Pará rubber	40
Congo rubber	10
Litharge	3
Sulphur	6
Lime or Aniline Oil	1

Friction for the duck plies should be plastic enough to thoroughly penetrate the structure of the duck and serve as a very tenacious binder between the plies of fabric. It is necessary, therefore, that the amount of the rubber should approach or exceed 90 per cent, consisting approximately of two parts selected from Group 1, on page 108, two parts selected from Group 2, and one part selected from Group 3. The reason for this blend is to gain the increase of plasticity contributed by the larger resin content of the lower grades, without sacrificing much tensile strength. For prompt curing effect the sulphur is assisted by the litharge and a small percentage of lime or organic accelerator as in the formula above. Some tire makers blend rubbers from all the groups in proportions to suit their individual ideas, especially for friction intended for small tires. In such cases the proportion of firm rubbers from Group 1 may be much reduced relative to rubbers selected from the softer groups.

CUSHION RUBBER

Fine Pará rubber	75
Zinc Oxide	18
Sulphur	6
Lime	1

The so-called cushion rubber located immediately under the tread rubber is essentially the friction formula in which the rubber content is all from the first group but less in amount, and the displaced rubber is substituted by zinc oxide or carbon black, which imparts a characteristic tough quality to the mixing, intermediate in this respect and in point of firmness, between the underlying "pure gum" layer and the tread stock.

SIDE WALL RUBBER

Fine Pará rubber	.22
First latex crêpe rubber	.22
Zinc Oxide	.52
Sulphur	3
Lime	1

Side wall rubber is intended to afford the underlying fabric construction substantial protection against abrasion. The toughness required is not the same as in the case of the tread stock, consequently the composition considered as a development of the cushion rubber takes a decreased percentage of rubber and corresponding increase of zinc oxide as a toughener, the percentage of vulcanizing ingredients relative to the rubber remaining essentially the same.

TREAD RUBBER

Fine Pará rubber	.36
White Auto. tread reclaimed rubber	.10
Zinc Oxide	.50
Sulphur	3
Lime	1

The tire tread stock indicated above is similar to the side wall except that a proportion of white automobile tire reclaim finds a place to contribute firmness and wearing quality without over mineralization of the compound.

The range in quality of crude rubber, and the number and variety of compounding ingredients available make possible many successful compounds with the suitable requirements of elasticity, strength and wearing properties for tire work, as regards considerations of quality and price.

The conditions involved in the manufacture of each type of motor tire demand special construction to secure corresponding serviceable compounds and frequently the problems are extremely baffling and the results misleading, owing to obscure factors difficult to discover.

Of course it is well to remember that white tires contain zinc oxide for color and no litharge or lead, red tires golden sulphuret of antimony or red oxide of iron and no litharge or lead, while black tires may contain litharge, lead and carbon black.

Returning to tread stocks, extra toughness is said to be obtained by the addition of a certain amount of balata. Prepared animal glue is also used for a toughener by many manufacturers.

It should also be remembered that certain grades of reclaimed rubber are fully as good as many grades of crude rubber and may be used to advantage.

The use of accelerators of the organic sort is often advisable, but should be undertaken only under the supervision of a rubber chemist or compounding expert.

Mixing and Mixing Mills

In the mill room the batch of crude rubber and compounding ingredients is mixed into a uniform plastic mass of uncured rubber compound known as "green" gum.

The mixing mill employed is much like a cracker or washer, but larger and heavier, and is of sufficient size to handle batches of at

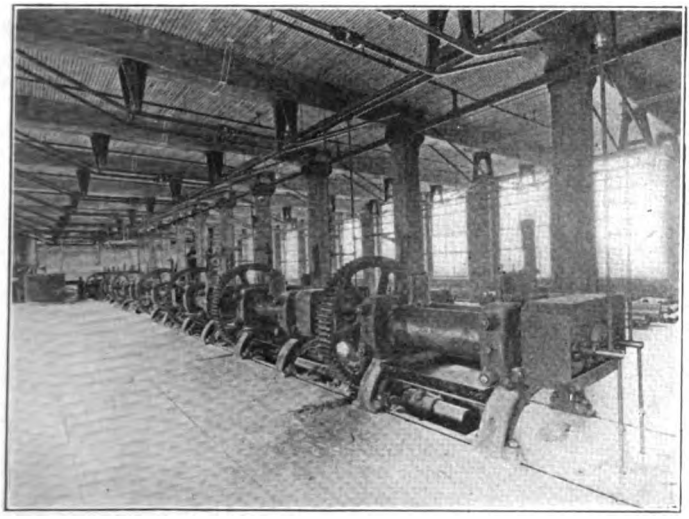

Typical Mill Room

least 100 pounds and frequently more. The rolls are smooth and run close together at differential speeds, about one to one and one-half. Hollow spaces inside the rolls are piped for regulation of temperature by steam and water circulation.

A useful attachment to the mixing mill is a belt conveyor which can be adjusted to operative position after the rubber is softened on the front roll ready to receive the composition. By this means the ingredients are more rapidly incorporated in the gum because they are fed to the top of the rolls as fast as they fall into the mill pan.

Mixing the Compound

The mixing of a rubber compound is usually made in a definite general order, as follows:

The rubber is warmed and broken down on the mill with addition, if any, of reclaimed rubber, solid asphaltum or mineral rubber and rubber substitutes. To the sticky, plastic mass thus formed, the bulk of the mineral ingredients intended as toughеners, pigments or simple fillers is added. These fillers are usually comminuted in a mixer, before being added to the rubber on the rolls of the mill.

Enclosed mixers, such as the Banbury automatic here shown, are now considered as standard rubber-mill equipment and have demonstrated their superiority on the softer stocks, all black tread stocks and many mixtures that are injurious to workmen.

The important features embodied in this machine include a large cooling area to reduce the temperature of the material being mixed;

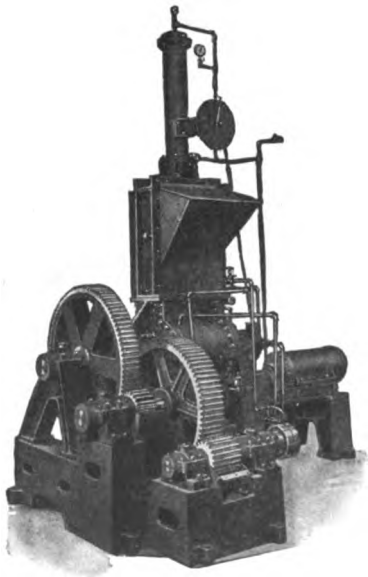

Banbury Automatic Mixer

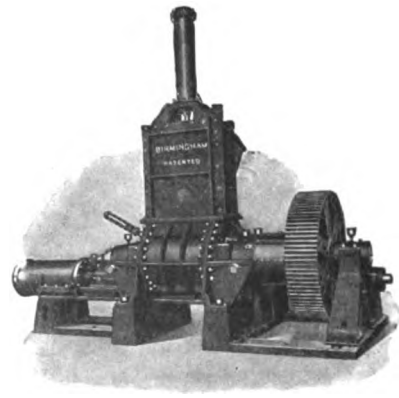

No. 9 Banbury Mixer

it is practically dust proof; the discharge door easily slides so that small effort is required to discharge the material that leaves the machine in comparatively small pieces.

The mixer consists of an enclosed trough, in which operate rotating blades of special construction, both trough and blades being hollowed

for cooling and heating purposes. The rubber and compounding ingredients are fed into a hopper and the finished batch is discharged by the turn of a valve, through the door at the bottom of the machine.

A recording thermometer records the temperature of the mix and also shows how many batches are mixed daily, and a timing device indicates by sight or sound when the batch is finished. Individual motor drive is commonly used, but the machines may be driven from the mill line.

This machine handles batches from 75 to 150 pounds, depending on the gravity. A larger size is capable of successfully mixing batches of 450 pounds, gravity 1.5.

The Eimco enclosed mixing machine is designed to produce a maximum product in a minimum of time. The frame is sufficiently high so that the clearance of the mixing tank from the floor is at least

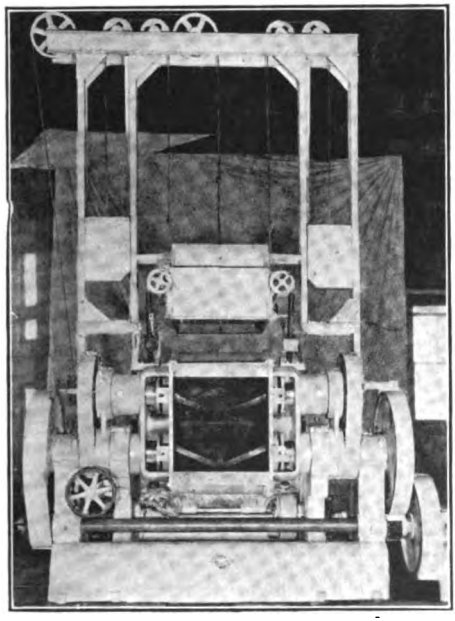

EIMCO ENCLOSED MIXER

30 inches when tilted. The mixing tank of 75 gallons capacity is jacketed and the inside is machined smooth. The heads are fitted with special stuffing boxes. The agitator is of special design, capable of mixing the rubber compound thoroughly. The agitator shafts are hollow and provided with heating or cooling fixtures.

The dust-proof feed-hopper is clamped tightly on the mixing trough when the machine is in operation. It contains separate compartments for the various materials, which are fed into the mixing trough by a compression feeding device that forces the required amount into the mixing trough. To increase efficiency, a dust-proof compression cover can be raised sufficiently high to allow the dumping of the mixing tank for discharge. Means are provided for tilting the mixing tank either by hand or power.

The Jameson apparatus for feeding comminuted materials to mixing mills feeds powdered ingredients to a mixer and collects and returns to the mill surplus material until all of the charge has been worked into the rubber.

The materials are contained in the hopper *5* that discharges by gravity into a pipe line *6*, to which other material hoppers may be connected. The fan *10* forces the materials which are deposited in pipe *6*, through pipe *11* to a hopper *12*, from which the discharge falls on one of the rolls *b*.

The surplus powder that falls between the rolls is collected in the center of an endless belt 13 and is drawn through nozzle 19 by suction

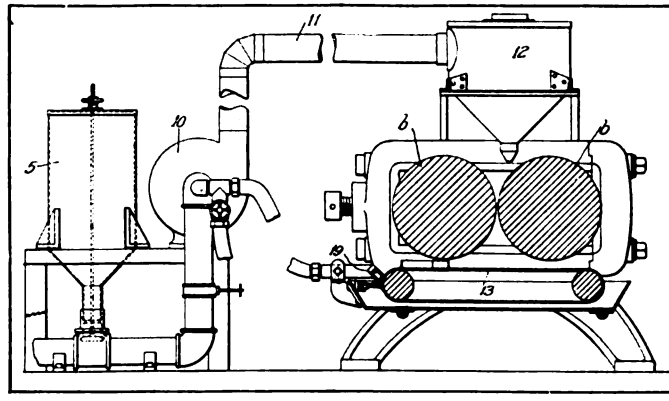

JAMESON DRY POWDER FEEDER FOR MIXERS

of the fan, back to the upper part of pipe 6 and again delivered to the hopper 12.

The mixing is assisted by the operator who at frequent intervals cuts the rubbery mass in a strip away from either end of the front roll, allowing it to pass back to the main mixing in a new position. The sulphur is usually added last, from the small box in which it is delivered. This procedure has the advantage not only of insuring that

the mixing will be prepared "unburnt," that is to say without injury from partial cure by the heat of milling, but dealing with the sulphur separately both in the compound room and mixing process safe-

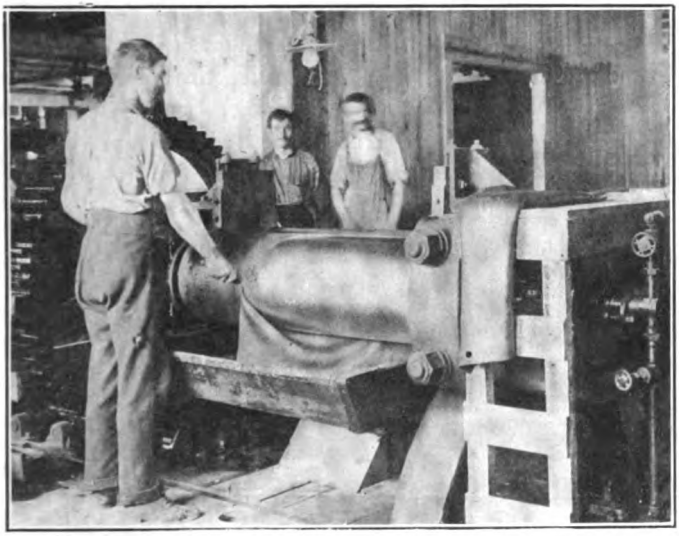

CUTTING THE STOCK TO ASSIST MIXING

guards against its accidental omission, which serious condition has often occurred in the absence of system.

SEASONING THE "GREEN" STOCK

The mixing being completed on the mill, the stock is cut off the rolls in slabs of about 25 pounds each and ¾ to 1 inch thick and laid on metal-covered table to cool before rolling up and transferring to the "green" stock room or aging bins for proper seasoning prior to use in the various departments. Those bins should be in a separate section in charge of a responsible stockkeeper whose duty includes the proper batching, marking, check weighing for accuracy of mixing and weighing the stock out to the calenders or tubing machines; also the batching and return of the raw scrap to stock. Too often the care of the mixed stock is not suitably provided for and the mill room foreman simply stores the batches in piles on the floor wherever space can be found. Here the stocks are subject to contamination and confusion; the resulting tangle to be straightened out as best it may be at stock taking time.

CHAPTER VI

CALENDERS AND CALENDERING

RUBBER gum for building up pneumatic tires is run into sheets of suitable thickness or applied to the fabric on calenders. The compound comes from the mixers in the form of a plastic dough; and "sheet calenders," having all rolls geared for uniform speed, and "friction calenders" geared for a difference in speed between the middle and bottom rolls are employed.

Standard Three-Roll Calender

The most widely used type is the three-roll calender. Sometimes it is geared for even motion, sometimes for friction, but usually it is adjustable for both. The middle roll is the drive roll, the machine

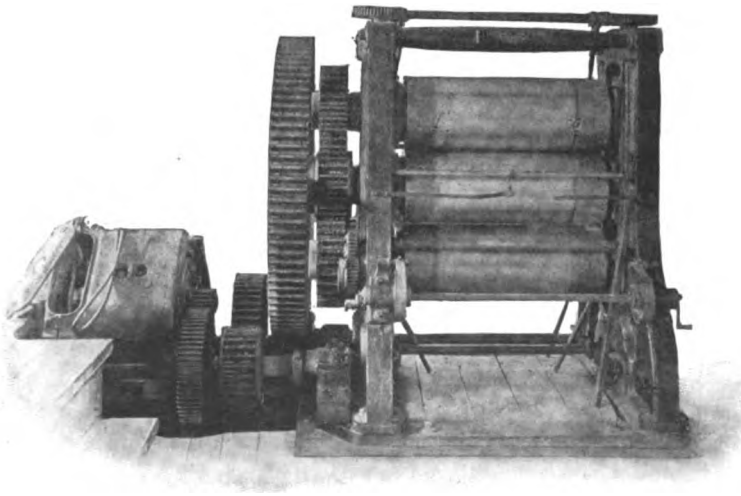

Calender for Coating Tire Fabrics

being driven by a large spur gear and the three rolls being geared together by pinions. The top and bottom rolls are adjustable by screws bearing against the journal boxes, the screws being operated by worm gears and a hand wheel. Sliding clutches on the worm shafts allow for alining the rolls. The rolls are chambered for water or steam and

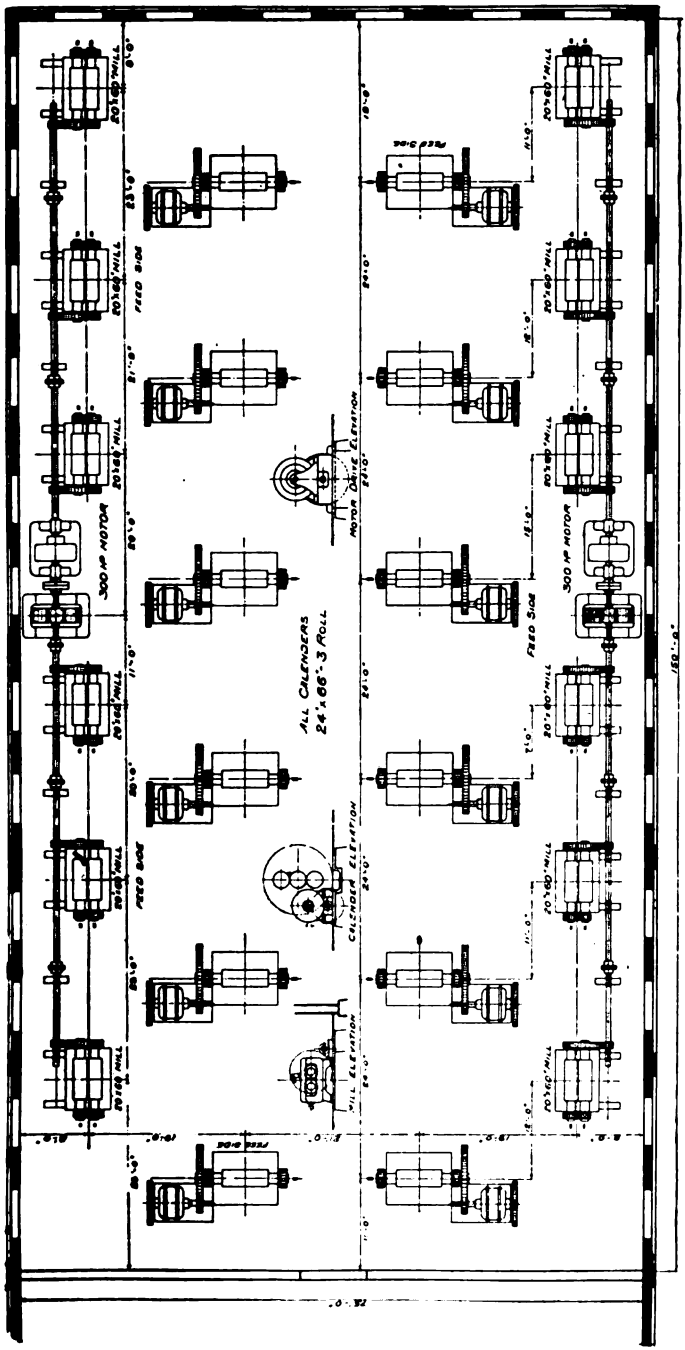

PLAN OF A MODEL CALENDER ROOM

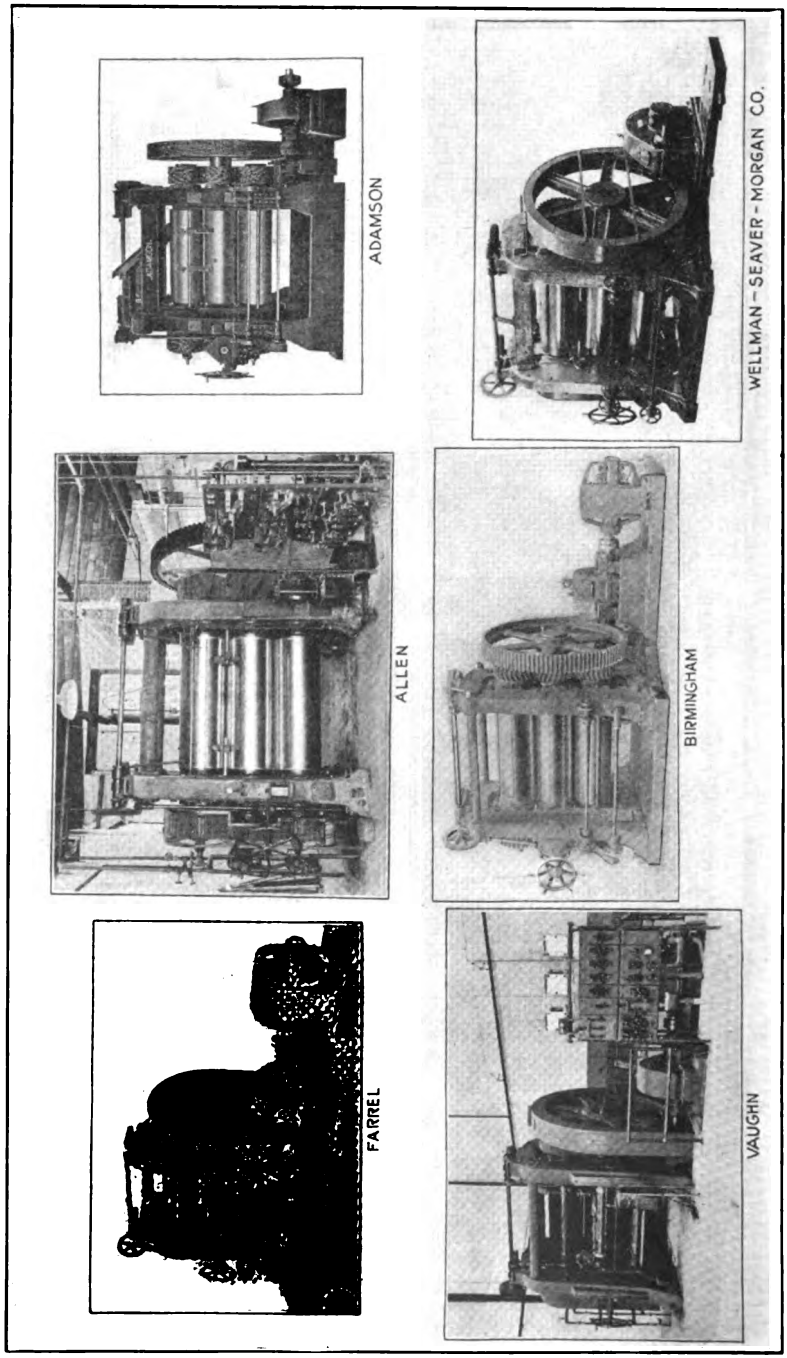

STANDARD 3-ROLL CALENDERS

have stuffing boxes with goose necks that connect with steam and water pipes and an exhaust pipe to carry off the condensation.

The drive roll has a friction pinion on the opposite end from the drive gear, and from this pinion the top and bottom rolls are driven by suitable gears to give a surface friction of 1¾ to 1. The drive gear has two speeds, one to secure a speed on the bottom roll of about 15 yards a minute, the other a speed of 25 yards a minute.

A friction let-off attached to the front of the calender frame holds a roll of cloth with more or less tension. On the opposite side of the calender is the wind-up, a stock shell on a shaft driven by spur gears or sprocket chain. As the roll of cloth increases on the wind-up arbor, the tension is slipped enough by means of the friction disks to make up for it. In front of the calender there is also a corrugated spiral spreader roll to take wrinkles out of the cloth, and a heated roll to warm the cloth.

Standard calenders employed in the tire manufacturing industry are massive machines of the 24 by 66-inch, 3-roll type equipped with electric motor drive and control. Tire calenders are operated as "friction" by variation in the relative speeds of the middle and bottom rolls whereby the fabric structure is filled with rubber, or on "even motion" that is with rolls revolving at the same speed producing a smooth sheet of rubber which may be directly applied as a "skim" coating on fabric already "frictioned" or delivered of thicker gage for independent use for inner tubes, side-walls, etc.

Sheet Rubber Making

The rubber compound, rendered suitably plastic by warming on a mixing mill, is fed to the rubber calender, between the top and middle rolls, which, together with the bottom roll, have been previously heated to a temperature suitable for the compound. Incidentally the feed side is always known as the front of the calender. All of the rolls revolve at the same speed in order that the rubber may pass through without grinding action and take a smooth surface from the polished rolls. The distance between the rolls is adjusted so that the sheet of rubber has a definitely determined thickness. This is measured by some form of micrometer applied by the calender operator to samples of the rubber cut from both edges of the sheet. At the proper thickness the end of a smooth roll of sheeting known as an "apron" or liner cloth is fed between the middle and bottom roll of the calender and by adjustment of the latter the rubber and sheeting are brought into contact and the sheet transferred. Circular knives, meanwhile, cut the stock into strips of any desired width.

Located across the calender, in front of and parallel to the middle roll, is a small, freely revolving, cylindrical steel roll known as the "air bar." Its purpose is to strip the rubber from the middle roll after the sheet has been built up to gage. This is done by passing a knife across the rubber in contact with the middle roll and, gathering the free ends together, passing it outside the air bar and around the bottom roll from underneath while it is received on the passing apron. The bar separates the rubber sheet from the middle roll with uniform tension and without trace of inflation or marking by air streaks.

By repetition of the passage of the stock apron through the calender the thickness of the rubber sheet is increased to any desired measure. This process of building up the sheet is necessary to eliminate air that would be included were the rubber to be run full thickness on one coat.

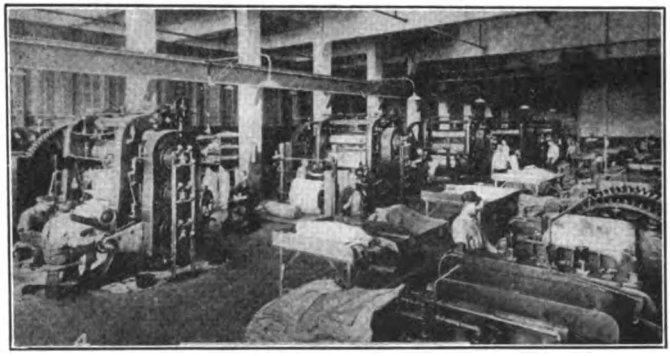

CALENDER ROOM, WHERE THE FABRIC IS FRICTIONED

Also the successive layers effectually repair all small holes that occur in individual layers and thus afford a solid sheet.

The finished rubber sheet is rolled up on the stock shell at the calender with a clean cotton or linen wrapper and transferred to the cutting room for manufacture.

Calendered sheets of side wall gum are cut and rolled in a protecting lining by a special machine with adjustable circular cutters. The strip stock is delivered in rolls to long cutting tables for cross cutting into suitable lengths for use on single tires.

FRICTIONING TIRE FABRIC

Another step preparatory to the manufacture of pneumatic tires is to coat with rubber the building fabric for the tire carcass. For this purpose a friction calender is employed that not only smooths out the

rubber in a thin and even coating upon the cloth, but also forces it into its meshes so that all spaces are filled with gum. This effect results from a variation in the relative speeds of the middle and bottom rolls by which the rubber on the middle roll is made to revolve as a "bank" against the surface of the fabric passing through at the speed of the bottom roll.

This predetermined difference in speed forces the rubber through the meshes of the fabric while the surface of the goods also gains a light coating of rubber. In friction coating the surface speed of the bottom roll is about 30 per cent. slower than that of the middle or drive roll to gain difference in speed for the frictioning effect. It should be borne in mind that the strength of the tire depends largely upon the fabric. Its elasticity and its airproof and waterproof qualities come from the rubber.

As cotton fiber is hygroscopic and tire fabric may contain under changing atmospheric conditions from 3.5 to 8.5 per cent. of moisture, with an average of nearly 7 per cent, it is customary before calendering or impregnating the fabric with rubber to run it through a cell or roll dryer to remove the moisture. Thorough drying is important and must be carefully timed that no moisture remains to interfere with the perfect union of fabric and rubber, while the fabric retains its natural oil for long life and tensile strength.

The operation of a friction calender is simple. The rubber and rolls are kept at a good heat to maintain plasticity of the stock. The rolls are adjusted somewhat apart and an ample feed of warmed rubber is banked between the middle and top rolls. A roll of warm, well dried fabric is placed in the brake brackets at the rear of the machine and passed through the calender between the middle and bottom rolls. The fabric is fed from the back, and the rubber from the front, the difference in speed between the rolls causing a "bank" or excess of rubber to revolve against the upper surface of the fabric as it passes between the two rolls and in this manner to penetrate its structure and coat its surface with the gum. After frictioning one side the fabric may be passed again through the calender and coated on the second side. In this case a plain sheeting or liner is rolled up on the shell with it to prevent adhesion of the raw gum surfaces.

The first friction coat practically goes entirely through the weave of the fabric and, therefore, comprises more than half the rubber applied to a fabric frictioned on both sides. After each passage through the calender the goods are rolled on a shell set in the "take up" device on the front of the machine.

Skim-Coating or Sheeting

Skimming consists of laying a thin coat or sheet of rubber on one side of the frictioned fabric to give it a smooth finish and build it up to a specified gage or thickness. This is done by passing the frictioned fabric through the calender between the middle and bottom rolls as for frictioning, except that the speeds of all the rolls are the same, producing a rubber sheet of any desired thickness according to the separation adjustment of the rolls.

Power Adjustment of Calender Rolls

The Vaughn device here shown enables very close adjustment of calender rolls necessary in running sheet stock to accurate gages. It is driven by a 24 horse-power motor through a core friction clutch. The

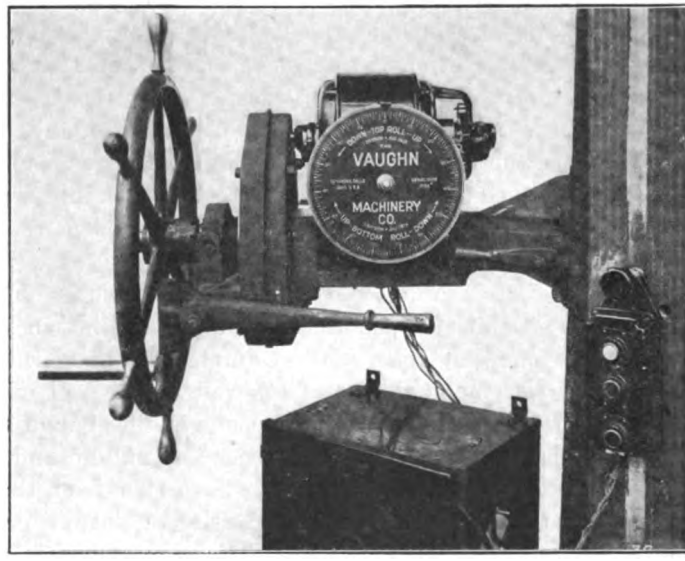

Vaughn Calender Roll Adjustment

small lever at the right operates the clutch connecting the driving shaft to either upper or lower roll adjustment as desired. The large lever at the left operates a clutch connecting the drive shaft to either motor or hand wheel, the latter an emergency means for operating the roll adjustment if the motor should be out of service. The automatic motor controller is operated by three push buttons, marked "Up," "Down" and "Stop." To operate the mechanism, the clutch lever at the left is pulled down, connecting the motor to the driving shaft. The small

lever at the right is placed in the proper position for driving the upper or lower rolls as desired, and the adjustment then made by pushing the proper buttons of the control. The movement of the rolls is accurately shown by the large dial, it being easily possible to estimate a movement of one-half of one-thousandth of an inch. The pointer on the dial may be reset at any time so that the movement of the rolls from that point can be read directly. The control for the motor is very positive for accurate and small adjustments. The friction drive is so designed that it will slip before the rolls are injured, should the motor be left running after they have come together.

Multiple Calendering

Multiple calendering has greatly facilitated the frictioning of fabrics with rubber for tire building. It has been the general practice to run the fabric through a calender which forces rubber into the

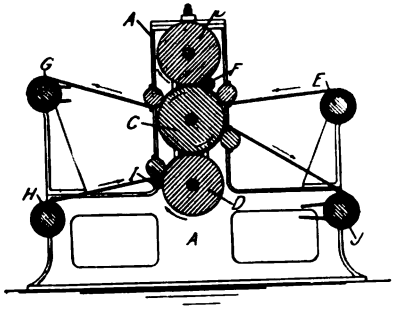

Kearns Multiple Friction Calender

fabric by means of steam heated rolls. It was then reversed and frictioned on the other side, after which it was run through rolls again and a surface or skim coat of rubber applied to it. This meant running the fabric through the machine three times, once for each impregnation and again for the coating.

By the new multiple calendering method a train of three calenders, placed one after the other, allows the material to be fed continuously from one to the next, and avoids shutting down and restarting twice.

Kearns Multiple Friction Calender

A series of pressure rolls are geared in vertical alinement, driven at different speeds relative to the adjacent roll, and arranged to friction with rubber a plurality of fabric webs.

Referring to the illustration, which is a vertical section of the calender, *A* designates one of the side frames that supports the rolls *B, C,* and *D.*

A web of fabric *E,* led by guide rollers, passes under the bank of rubber stock *F,* and between the rolls *B* and *C,* where it is frictioned, and then wound up at G. At the same time another web of fabric *H* is fed past the bank of rubber stock *I* and passes between the rolls *C* and *D,* where it is frictioned and finally wound up at *J.*

Seiberling Friction Calender

This provides a continuously-working apparatus for coating both sides of the fabric with rubber and for applying a skim coating to one of the sides. The fabric to be coated is placed in two stacks *A, B,* with a railway sewing-machine *C* interposed for joining the end of *B* to the beginning of *A.* The fabric *D* is drawn from the top of *B* and

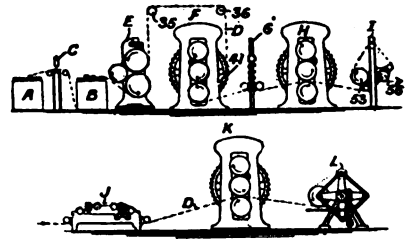

Seiberling Friction Calender

passes through a tensioning device *E* over idler rolls 35, 36, 41 to a calender *F,* where the under side receives a coating of rubber. The fabric then passes through a tensioning device *G* to a second calender *H,* which coats the upper surface, and thence to a tensioning device *I* having cooling rollers 53, 56. The fabric next passes to a device *J* wherein the selvage edges are trimmed off and a third calender *K* applies a skim coating to the upper surface of the fabric, which finally is wound up by a device *L.*

Attachments for Calenders

As attachments for calenders, spreaders and bias cutters there are several brushing, rolling, measuring and tensioning devices for the purpose of removing wrinkles, puckers and turned edges from tire fabrics. Whether frictioned, coated or impregnated, the fabric is wound up in cloth and put away for twenty-four hours in order that the rubber may regain its elasticity.

Midgley Caliper Gages for Rubberized Fabrics

Two ordinary gages are mounted above a tension roller over which the rubberized fabric passes, the thickness being continuously indicated by the gages.

Cederstrom Aging Rolls For Frictioned Fabric

When freshly calendered stock is rolled up and left standing while cooling, the weight of the roll causes the fabric to sag and in many places adhere to the liner. This difficulty is obviated by the present method which consists in revolving the roll of fabric while it is cooling. The machine for accomplishing this purpose is here shown in longi-

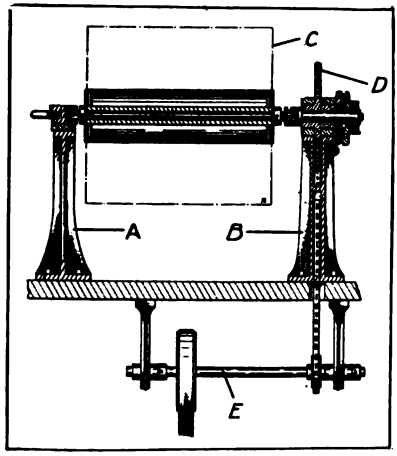

Cederstrom Aging Rolls

tudinal section and comprises two standards *A* and *B* between which the roll of frictioned fabric *C* is revolved, supported in suitable bearings. The roll is continuously rotated by chain gearing *D* from the main shaft *E* and the machine is preferably installed in a room where the fabric is subjected to atmospheric temperature.

Tyler-Nall Tension Device for Calenders

This is a device for maintaining an even tension on fabric passing from one calender to another. Two idler rollers *A* and *B* are attached to the opposite sides of the frame *C*. Between these is a third roller *D* mounted in bearings *E*, which slide up and down in the frame. This roller is raised and lowered by cables *F* and *G*, attached to the carriages *E*, and passing over sheaves *H* and *I*. These cables are secured

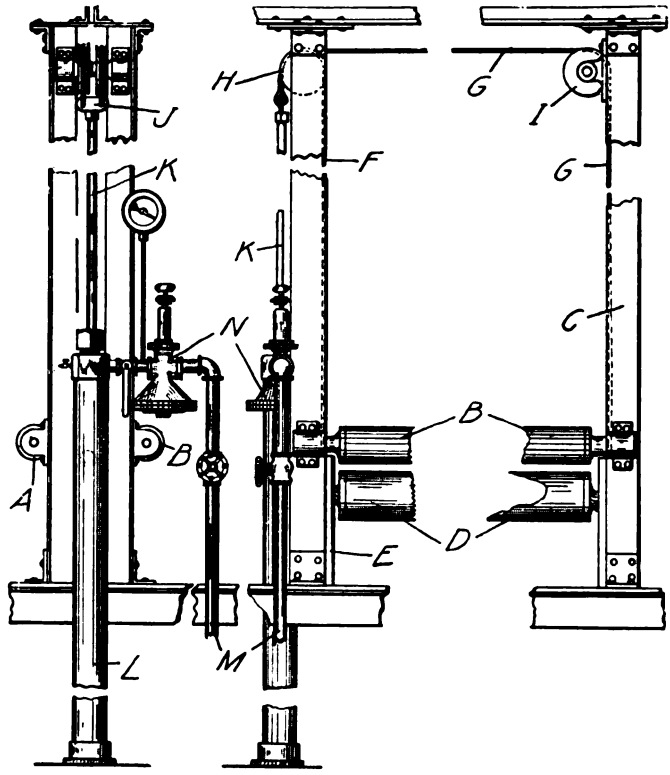

TYLER-NALL TENSION DEVICE FOR CALENDERS

to a cross-head *J* at the upper end of a rod *K*. The lower end of this rod reciprocates in a hydraulic cylinder *L*. Water enters the cylinder through a pipe *M*, and the pressure is controlled by a regulator *N*.

The operation of the device is as follows: The fabric is carried under the roller *A* over the sliding roller *D*, and under *B*. During the movement of the fabric over these rollers the regulator *N* is set to maintain a pre-determined pressure on the piston in the cylinder *L*. The result is to force the piston down, to raise the sliding roller *D*, and to take up the slack.

UNIVERSAL TIRE MACHINE DRUM AND CALENDER STOCK SHELL

Gammeter's galvanized steel tire machine drum is used for handling the fabric or rubber stock from which tire casings are made. In construction it is strong, rigid, light and durable. It is 6 inches in diameter and 17 or 20 inches long for a 1¼-inch bar. The

Universal calender stock shell of galvanized steel has an improved spider or truss construction together with ingot iron rivets properly set which so stiffen the body as to make it possible to handle the

UNIVERSAL TIRE MACHINE DRUM

UNIVERSAL CALENDER STOCK SHELL

heaviest goods without danger of collapse. Four, five and six-inch rolls are made in lengths from four to 63, 72 and 84 inches in length respectively.

GENERAL ELECTRIC AUTOMATIC CALENDER CONTROL

A calender is often used for various classes of work, such as frictioning, skim coating and sheeting tire stock. Each of these operations is performed at a different speed, and in order to maintain a uniform quality of material it is necessary that the speeds of the rolls during the various processes should be constant.

Therefore a direct current adjustable speed motor is preferable for a calender drive. This type of control is fully automatic. It consists of three parts, the main panel, on which is mounted the operating contactors; the master panel, on which is mounted the field rheostat for speed control with 70 points to insure close speed adjustment, and a push button station, mounted on the side of the calender, from which the control is operated.

From this station the motor may be started, stopped, or slowed down without stopping for threading in. After once setting the master controller for any desired speed, the operator can either slow down to the threading speed or stop and then start up again and return to the same speed without readjustment of the control.

The master field rheostat is provided with a dial stamped in yards per minute, so that the operator always knows the yardage at which he is running. The equipment also provides dynamic braking for quick

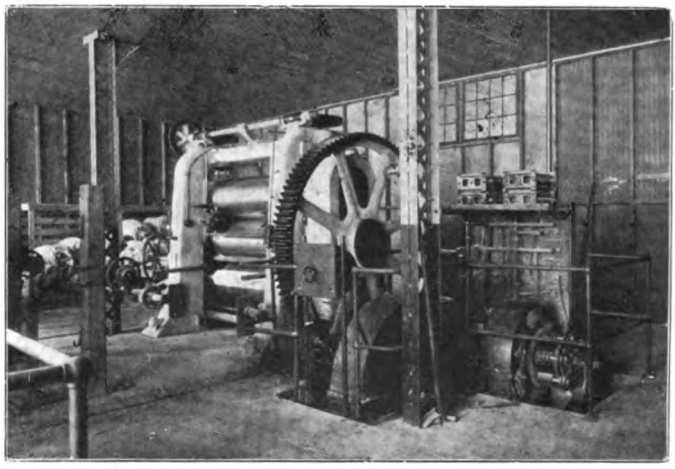

GENERAL ELECTRIC CALENDER CONTROL

stopping. The control illustrated is used with a 90-horse-power, 300 to 900 revolutions per minute, 230-volt motor driving a 24 by 66-inch 5-roll Farrell calender.

CHAPTER VII

RUBBER AND GUTTA PERCHA CEMENTS

THE term cement includes all substances employed for the purpose of causing the adhesion of two or more bodies. The different parts of a solid are held together by an attraction between their several particles, which is termed the attraction of cohesion. This attraction acts only when the particles are in the closest possible contact; even air must not be between them.

If, after breaking any substance, we could bring the particles into as close a contact as before and remove the air, they would reunite and be as strongly connected as ever.

But, in general, this is impossible, small particles of grit and dust get between them, the interposed air cannot be removed, and thus, however firmly we press the parts together, they refuse to mend.

Cohesive and Adhesive Attraction

Cohesion takes place between the parts of the same substance and must not be confounded with adhesion, which is the attraction of different substances to one another; for example, the particles of a piece of rubber are united by cohesive attraction, while the union of cement and rubber to each other depends on adhesive attraction.

It is important that this distinction be borne in mind, for, in almost all cases the cohesion between the particles of the cement is very much less than the adhesion of the cement to other bodies, and if torn apart, the connected joint gives way, not by the loosening of the adhesive, but by a layer of it splitting away. Hence the important rule that the less cement the stronger the mending.

Essentials of Good Seam Construction

The rubber chemists of the Bureau of Standards have shown by tests and the examination of microsections of cemented seams what the essentials of good seam construction are. A good seam requires first of all a good cement. Next, the surfaces to be cemented should be smooth, clean and easily wetted by the cement. The cement should be applied in a thin coat of uniform thickness; two coats are usually sufficient. The strength of the seam will be profoundly influenced by the character of the cemented surfaces. It is also influenced by change in temperature, load and width of lap. Cemented laps show remarkable strength at ordinary temperatures, but their strength decreases rapidly

with increasing temperature. There is presumably a transition from viscous to plastic flow, and the lap parts very quickly. Strength increases roughly as the cube of the width of the lap at small widths, and even faster with wider laps.

Rubber Solutions and Compound Cements

Rubber cement may be divided into two classes, namely: a simple solution of the gum which by the evaporation of the solvent leaves a thin layer of the rubber between the parts to be stuck together; and a compound cement, which, after being applied and the pieces stuck together is vulcanized, and to a certain extent becomes incorporated as a part of the article so formed. The first is used in repair work. The second is used in tire manufacture.

Cements made of gutta percha are included under the generic name of rubber cements. As a rule, cements are mainly solutions of gums in naphtha. There are other solvents: chloroform, ether, bisulphide of carbon are efficient for this purpose, but are too expensive for general use. For some degrees of tenacity gum mastic, gumlac, or ordinary rosin is added.

The finest qualities of cement are made from fine Pará rubber, while in some grades a large proportion of plantation rubber is used, and in the cheaper grades even lower cost gums are utilized. A cement manufacturer can furnish rubber cement at almost any figure a customer desires, the price being practically determined by the quality and quantity of the gum used.

How Cements Are Made

The manufacture of pure rubber cement is very simple. The crude rubber is cut in small pieces, softened by hot water, and run through the washing rolls in the usual manner, then sheeted and hung in lofts until thoroughly dry. It is then ready for dissolving in naphtha. The proper quantities of rubber and naphtha are placed in a "muddler," an iron tank having a capacity of about ten barrels. This tank has a central revolving shaft, furnished with projecting arms, while similar arms fastened to the inner surface of the tank enmesh those on the shaft and by constant stirring facilitate the solution of the gum. A steam jacket over the lower half of the tank serves further to hasten the process. Cement churns run by power are often used instead of the muddler. When the gum has entirely dissolved, the cement is ready for drawing off into cans or other air-tight containers for delivery.

Simple as this process is it requires care and experience, while the admixture of the various qualities of gum requires a knowledge

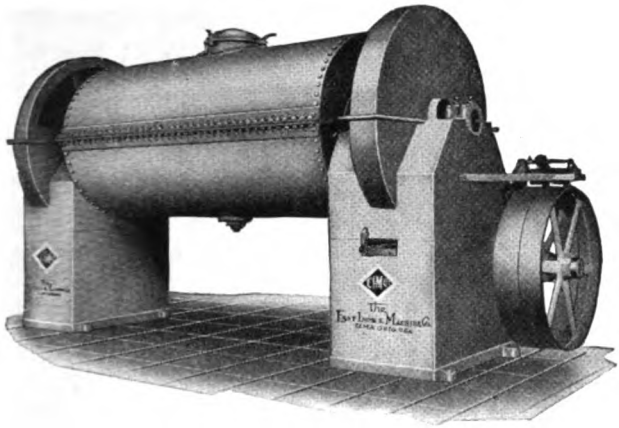

EIMCO CEMENT CHURN

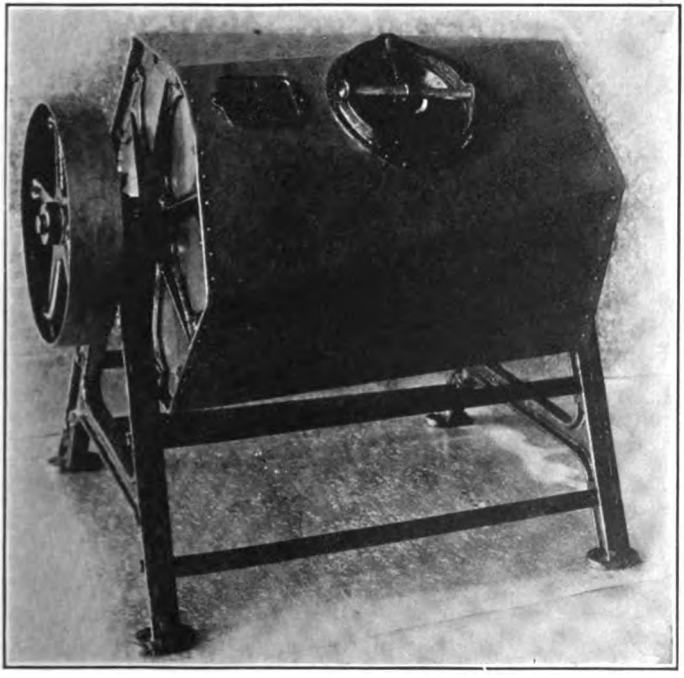

QUIN CEMENT CHURN

of their individual properties and also of their prices current, where cement must be manufactured at certain prescribed prices.

Cement Churns

Rubber cement making has grown in importance and volume during recent years, resulting in the development of special churns designed to reduce the working time and improve the product. The Eimco cement churn is a strong, heavily built machine of 300 to 1,000 gallons capacity. The mixing tank is cylindrical and made of heavy

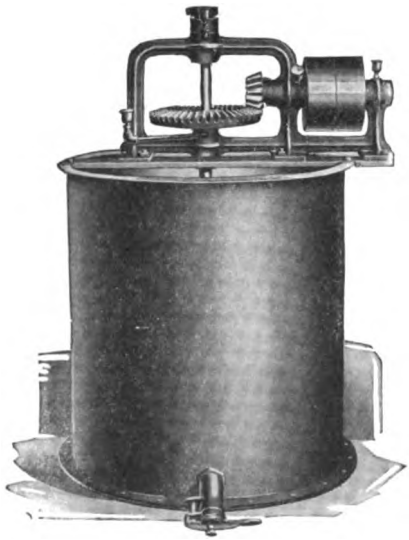

Patterson Cement Churn

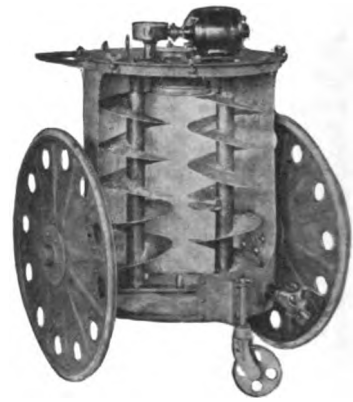

Triplex Mixer

boiler plate. It has a hinged cast iron man-hole cover which makes the machine absolutely gas tight and prevents the escape of solvent fumes. A special agitator reduces by one-half the tire required to mix the product and also greatly improves the quality. It scrapes every inch of the interior of the mixing tank; brings all of the solution into treatment and prevents any of the material from collecting in the corners, thus keeping the inside of the tank clean. The speed arrangement permits using a slow mixing action at the start and an exceedingly high speed to finish the operation. The cement is discharged through a bottom gate.

The Quin cement churn has a hexagonal shaped barrel constructed of triangular, galvanized iron plates that automatically works the contents from end to end, and over and over, as the churn revolves, thereby

producing a thoroughly mixed solution in the shortest possible time. A brass filler cap, with a lip on each side and a quick-opening clamp attachment, enables the operator to draw off the cement from the top, free from settlings.

Vertical cement churns such as the Patterson are used in rubber mills when the making of certain solutions requires this particular type of mixer. They are equipped with belt-driven agitators and gate valves for drawing off the solution.

While stock mixers are built with steel tanks, they are also furnished with wood tanks, vertical shafts and stirring devices made of wood for use in connection with materials that attack iron.

A novel mixer for liquids, semi-liquids and soluble materials, which is meeting with success in handling rubber cement and other compounds, is the Triplex.

The agitating or mixing is accomplished by upper and lower flights mounted and opposing each other on vertical shafts, which revolve and also rotate about the container. The lower flights raise the heavy material from the bottom and the upper flights lower the light material from the top and the rotating movement about the container imparts a complete three-way movement, whereby every particle of material is displaced.

The portable type is made in three sizes, 10, 20 and 50-gallon capacity. The 10 and 20-gallon mixers are hand-portable and hand operated. The 50-gallon mixers are wheel-portable and motor-driven. The stationary type is made in 50 to 3,000 gallons capacity, and may be driven by motor or belt.

Power for Churns

Power for churns (these are best of the enclosed type) should be furnished from outside by means of shaft or some kind of a drive permitting a cut-off opening. While the speed of the churns is necessarily slow (owing to the ease with which rubber is electrified by friction and pressure), as a precautionary measure it would seem advisable to ground all of the machinery.

Cement Storage

The storage of rubber cement is best effected in metal barrels or tanks rather than in wooden barrels. The latter are unsuitable because the loss of solvent caused is as great as 20 per cent. All the solvent with which a rubber cement is prepared must be retained in the mixture to keep it at the consistency for its proper use and this can only be done in a non-porous closed container.

Filling Tubes with Cement

For repair kits and the retail trade rubber cement is put into tubes, millions of these little accessories being produced annually. The tubes are filled with cement at the large end, which must be closed and sealed with a special metal clip to prevent leakage. The filling and closing operation is automatically performed on the Colton machine illustrated, which is used many cement manufacturers.

The container is designed to carry sufficient air pressure to facilitate the flow of the rubber cement. This air pressure may be taken

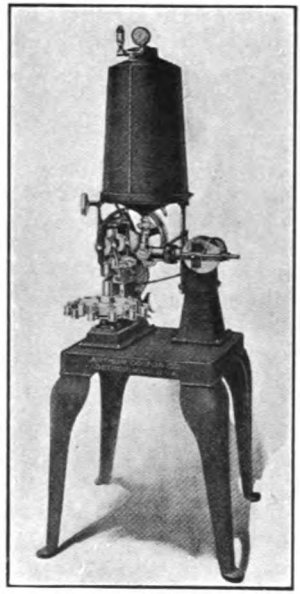

Cement Tube Filler

from any source available, but must not exceed 20 pounds per square inch at the receiver on the machine. Any pressure less than this may be used, depending on the viscosity of the material being handled.

The machine will handle tubes ranging from 1/2 to 1 1/4 inches in diameter and from 2 to 6 inches in length and has a capacity of 25 to 30 tubes per minute.

Fire Hazards of Cement Manufacture and Use

To rubber cements is laid the blame for the majority of fires in rubber mills. The hazard of the manufacture and use of this article is due to the solvent, usually naphtha.

It is recommended that the manufacture of cement should always be conducted in a detached building away from the main plant, well ventilated, and carried on without the aid of artificial light. If light be necessary, incandescent light should be used, the sockets to be keyless, the wiring run in conduits, the lamps enclosed in vapor-proof globes, and the switches and fuses located outside of the building. The naphtha should be stored in an underground tank located 30 feet or more from any building, and pumped as needed to the cement mixing room.

If the plant be sprinklered, the house should contain a standard system of automatic sprinklers, and in all cases the cement room should

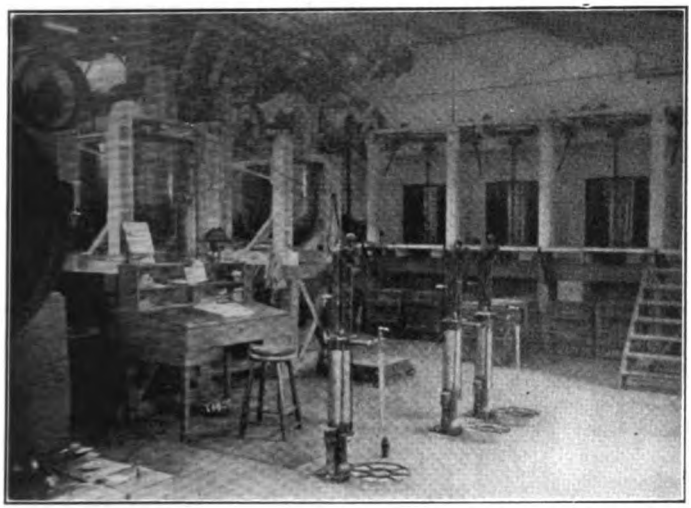

INTERIOR VIEW OF A CANADIAN CEMENT HOUSE

be provided with a steam jet of ample size for smothering fires, having an easily accessible valve located on the outside of the building.

A day's supply only should be brought into the factory, and only enough distributed to the operators for immediate use. At the close of the day that remaining in the small pans should be returned to the container, which should be removed to the cement house.

In some factories, naphtha is used for thinning the cement at the benches. This would seem to present a needless hazard, for the cement is easily made of the proper consistency, and if used in small quantities at a time there should be very little evaporation and thus no call for the addition of the naphtha.

Gasoline Storage and Distribution

The Allen gasoline storage and distributing system is much used for transferring gasoline from the storage tanks to any receptacle. It is operated entirely by air pressure, supplied from any outlet of an existing system, and all liquid passing through the system is accurately measured and recorded. There is no opportunity for the gasoline to vaporize or for gases to collect.

To operate the draw-off panel, shown in the accompanying illustration, press on the finger valve and move the handle to the left,

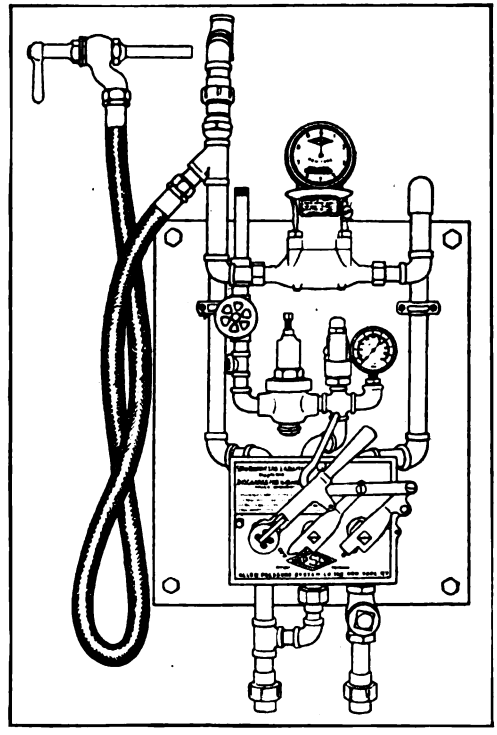

Allen Gasoline Storage System

and the liquid will then flow through the meter and discharge outlet. To shut off the flow, return the handle to its original position—this permits the air to escape from the working tank and allows it immediately to refill with liquid. The working tank is likewise vented, except when the panel is in operation. The storage tank may be filled while the system is in operation, and liquid may be drawn at any number of points at the same time.

Each draw-off panel is operated from an individual working tank, any number of which may be connected to one or more storage tanks. The operation of the system is not affected by the inactivity of the storage tank, provided one remains in service.

The Bywater system for distributing inflammable rubber solvents, such as petrol, naphtha, etc., is adaptable to any quantity from a small tank to a system with many draw-off points. It is worked by hydraulic power which distributes the solvent automatically to any level at which the factory's water storage can be applied.

The storage tank is placed below the ground or at any convenient point for receiving the solvent from railroad or water carriage. A meter

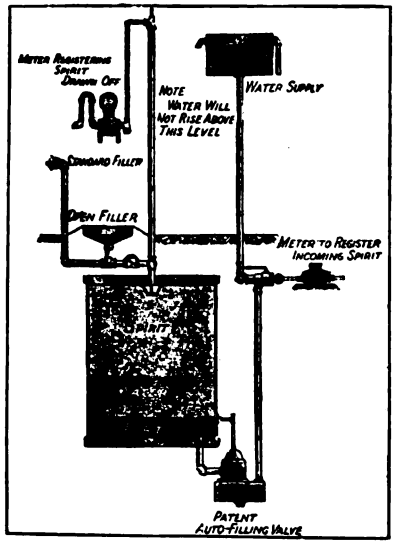

BYWATER NAPHTHA STORAGE

is arranged to measure the quantity run into the tank. Water from the main supply is let into the tank, when the oil or spirits rise to the top and any dirt or foreign matter sinks into the water. This accumulation is drawn off later when the tank is refilled with solvent.

The petrol flows through the connecting pipes to the point where a draw-off is needed in any part of the factory. A great saving is obtained in evaporation by this system, as the storage tank and the connecting pipes are kept full. Meters can be placed at any point, by which the supply can be gaged, and absolutely pure solvent can be drawn off without any risk of fire or loss.

Fireproof Cement Cans and Cups

The cement, except that in immediate use, should be stored in tightly covered metal cans designed for this purpose.

Experience has proved that they must be made in such a way that their contents in case of fire will burn off slowly, confining the fire to the immediate vicinity instead of exploding and scattering the fire over a large area.

One illustration shows a cement can designed for a supply room and one which can easily be transferred to and from the cement house. It is constructed of heavy galvanized sheet metal with slanting bottom and a tight-fitting cover that prevents evaporation and acts as a safety valve in case of fire. The quick closing gate valve saves time and reduces waste. For individual use there are small cement dispensers with mouths or cups attached for dipping the brush.

The McNutt containers, ranging in capacity from one-half pint to one gallon, may be filled in the usual manner and closed by a screw cap, thus keeping the contents in good condition until used. The cement feeds from the bottom of the container to the brush cup, thereby permitting the use of settling compounds with uniform results, avoiding the waste common to ordinary containers.

The brush is protected by being immersed in the cement when not in use and a disk that prevents the cement from reaching the handle of the brush, acts as a cover to the cement cup.

Three other types of McNutt safety bench cans for rubber cement or gasoline deserve mention. The bench can with a removable cover is provided with a floater valve which rests on the gasoline or rubber cement and allows the operator to use a light brush where a small quantity is desired. When the float is pressed down slightly the liquid is automatically forced up through the fine screen when the pressure is released. There is no danger from explosion in a can of this construction, which has the additional features of economy in the use of gasoline. This type of can may be used for any volatile liquid in rubber mills or repair shops.

The upright and horizontal types of rubber cement pots are constructed after the fashion of drinking vessels for poultry and permit only a small quantity of cement or gasoline to stand in the brush receptacle, thus minimizing the escape of fumes into the atmosphere.

The U. S. M. C. cement and naphtha bench cans are made on up-to-date non-explosive lines.

The cement can has a shut-off gate which regulates the flow. The supply trough is fitted with a spring-closed cover. It is filled

SUPPLY ROOM CAN

SAFETY BENCH CAN

MCNUTT CEMENT CONTAINER

UPRIGHT AND HORIZONTAL BENCH CANS

NAPHTHA BENCH CAN

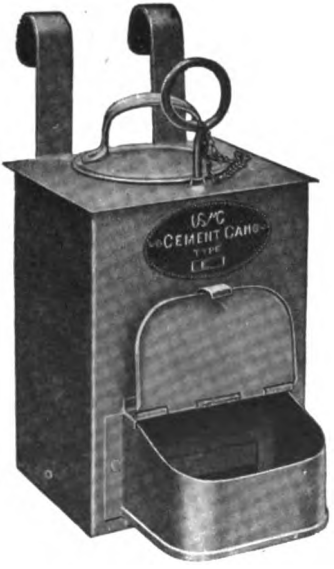

CEMENT BENCH CAN

through the opening at the top over which is fitted a removable cover. This opening is large enough to make cleaning easy. The fusible latch which closes the cover when it melts prevents explosion and confines the fire to one spot. The can cannot explode and scatter burning cement over a large area. It is made in one size only, holding approximately one-half gallon.

The improved naphtha dispensing can is designed for the safe and economical use of inflammable liquids, and its construction is such that in case of fire its contents will blow off and burn slowly rather than explode and scatter.

It consists of a large, air-tight chamber or reservoir which is connected with an open, spring-pressed cup by means of a spout and a ball valve. A slight pressure on the cup allows the ball to drop from its seat and the liquid flows freely into the open cup which, when released, reseats the ball, thus stopping the flow. The vacuum principle controls the feed, and makes overflow impossible. All necessary parts are manufactured of non-corrosive metal. The rest is cast iron. It is made in one size only, holding approximately one quart.

Portable Cement Tanks

For economical distribution of rubber cement to the various departments, the Bowser portable cement tank, shown in the opposite illustration, is mounted on rubber-tired wheels and may be easily moved by one man who keeps the individual containers filled throughout the entire factory.

The pump measures one quart with a full stroke of the plunger, or any intermediate qualities may be drawn by adjusting the quantity stops, and a discharge register tells the quantity of cement discharged from the pump. A hollow ball expansion chamber, permits expansion of the liquid in the pump cylinder due to changes in temperature.

All seams are riveted and soldered from the inside and outside to insure against leaking, and all openings are practically air-tight. A hand-operated agitator insures uniform consistency of the solution.

Applying Cement

Where two surfaces are to be joined, the cement must be in contact with both. Very frequently in work on unvulcanized rubber, instead of using cement, two surfaces to be joined are simply brushed over with naphtha. This softens the rubber, and leaves it in nearly as favorable a condition for adhesion as if cemented.

As a rule as little cement as possible should be left between the surfaces which are to be united, and, in addition to this, all cement should be given plenty of time to dry. Rubber surfaces that are to

be joined should be brushed lightly with thin cement, and then, if practicable, laid where they are exposed to a gentle heat. This both softens the rubber and evaporates the solvent. When the surfaces can be touched with the finger without having any particle of cement

BOWSER PORTABLE CEMENT TANK

adhere to it they can be joined with good results. A premature joining of material newly cemented sometimes produces both porosity and blisters.

Vulcanizing rubber cement should be similar to the mixed sheet upon which it is to be used. That is, it should contain about the same percentage of sulphur. On every can, tub or pail, in use for holding cement should be graven the ancient direction, "Well shaken before taken," or let it be thoroughly understood that much defective work comes from "thick cementing" where the sulphur, etc., have settled.

Many published cement formulae are of English, French, German and American origin. Many of these are not practical because of their high cost. They have, however, a suggestive value.

The basis of all these is either Pará, plantation rubber or gutta percha, while the solvents are turpentine, rosin oil, carbon disulphide, tar oil, chloroform, ether, fusel oil and naphtha. Auxiliary gums used include shellac, mastic, styrax, pitch gum, ammoniacum, rosin, gamboge, etc. Ingredients more or less valued are casein, glutin, beeswax, isinglass, fish glue, brown sugar and elastic glue. Many of these cements contain a small amount of sulphur as a drier. For the same purpose are also used litharge, bisulphide of mercury, carbonate of iron, ocher, manganese, red lead, white lead, slate dust and alum.

For giving tackiness to the cement, rosin or common pine pitch is added. Aniline colors are sometimes used for black, red, blue, yellow and green.

The best pure rubber cement is made by cutting pure unwashed fine Pará biscuits into thin slices which are thoroughly air dried before solution in benzol. The dried rubber is first soaked in benzol until softened and swelled by the solvent, then carefully stirred, subsequently adding as much solvent as will produce the desired consistency. By this method the tissue of the rubber is not destroyed and the cement produced has great tenacity.

U. S. Army Specifications

The qualities of cement indicated in the United States Army specifications are accepted as the best practice as to qualities adapted for satisfactory tire and inner tube repair work.

The Motor Transport Corps of the United States Army, the War Service Committee of the Rubber Industry, and the Special Board of Officers, convened under paragraph 30, S. O. 91, W. D. 1918, prepared and approved a series of specifications for pneumatic tires, including automobile, motorcycle and bicycle tires; solid motor tires, repair material and accessories. Included in these specifications were those quoted below for a vulcanizing cement intended for tire and tube repair work.

Vulcanizing Cement

This cement shall be made from a compound having a maximum specific gravity of 1.15 containing at least 75 per cent by volume of the best quality new wild or plantation rubber and shall be free from ingredients known to the rubber trade as oil substitutes or reclaimed rubber. It shall be dissolved in benzol. The rubber compound content by weight to be determined by evaporation and milled to constant weight, shall not be less than 17 per cent of the total weight of the cement.

TYPICAL CEMENT FORMULAE

Pneumatic Tire Cements

In pneumatic tire manufacture the following cement compounds are excellent:

Fine Pará rubber	24 parts
Whiting	12 parts
Litharge	16 parts
Sulphur	1.25 parts

One pound to each gallon of naphtha.

A richer cement for the same purpose is:

Fine Pará rubber	33 parts
Litharge	6 parts
Sulphur	3 parts

One pound to each gallon of naphtha.

For more general and modern types of cements used in this work take any of the compounds listed in the chapter on pneumatic tire manufacture and dissolve in naphtha.

Solid Tire Cements

When solid tires are affixed to hard rubber bases a cement that will cure up into hard rubber is applied to the wheel rim. A very good one is:

Fine Pará rubber	30 pounds
Sulphur	10 pounds
Naphtha	10 pounds

A much cheaper one is:

Plantation Ceylon rubber	9 pounds 8 ounces
Barytes	2 pounds
Magnesia	1 pound
Litharge	3 pounds
Aluminum flake	8 pounds
Sulphur	2 pounds 8 ounces

Leather Tread Cements

Leather treads applied by rubber cements need special preparation to secure successful adhesion. Both should be roughened—the leather,

to produce a fibrous surface for the penetration of the cement; and the rubber, for the removal of any incrustation of sulphur. If the leather is at all oily a washing of the buffed surface with benzol is recommended.

A very good formula for this work is:

Gutta percha	20 parts
Asphaltum	6 parts
Rosin	5 parts
Petrolatum	50 parts
Bisulphide of carbon	70 parts

A cement containing a percentage of talc, powdered soapstone, or whiting is also of value. This absorbs the oil, and allows the cement to perform its function. These substances do not dissolve, but are held in suspension in the cement, which must be thoroughly agitated before applying.

Hard Cements for Bicycle Rims

Bicycle tires and their fastening to wheel rims have evolved many cements. They are chiefly of the sort known as hard cements.

Good hard cement does not crumble under the tire, and does not become soft enough to let the tire slip in warm weather. Such cement is applied by melting and applying a thick, even coat with a brush, covering the rim from edge to edge. The base of the tire is cleaned with sandpaper, and its surface is wet with gasoline or rubber solution. The tire is put on the rim while the cement is soft; then partly inflated, the wheel put into the frame, and the inflating finished.

The simplest hard cement is shellac applied to both rim and tire in three coats. It, however, is not as lasting as hard cements made from gutta percha.

The following are excellent:

Melt 5 pounds gutta percha with 10 pounds asphalt. Apply hot.

4 parts common pitch; 4 parts gutta percha. Melt together.

2 pounds tuno gum	72.70
½ pound rosin (powdered)	18.20
¼ pound gutta percha	9.10

Melt.

Cycle Tire Repair Cements

Cycle tire repair cements are very simple and usually contain no sulphur. Some contain bisulphide of carbon as a solvent, as:

(1)
Gutta percha	1 part
Caoutchouc	2 parts
Venice turpentine	1 part
Carbon bisulphide	4 parts

Dissolve the gutta percha and caoutchouc in the carbon bisulphide and add the Venice turpentine.

(2)
Isinglass	1 part
Gutta percha	2 parts
Caoutchouc	4 parts
Carbon bisulphide	8 parts

(3)
Fish glue	1 part
Gutta percha	2 parts
India rubber	4 parts
Bisulphide of carbon	32 parts

(4) 2 parts gutta percha
1 part rubber
Dissolve the rubber in benzol and the gutta percha in bisulphide of carbon.

(5)
Gutta percha	2 parts
Caoutchouc	4 parts
Isinglass	1 part
Carbon bisulphide	32 parts

Tire Dough and Quick Drying Cements

The material sold for filling tire tread cuts and similar repairs is essentially a rubber mixing possessing more or less drying or curing quality, softened to an easily workable consistency with naphtha or benzol. It is sold generally in compressed top tins to retain its plasticity, which, if lost by evaporation of the solvent, can be restored by working more or less naphtha into the dried mass. There is no fixed composition for material for this purpose. The proportion of rubber is relatively large, and soft resinous materials are excluded.

Self-Vulcanizing Cements

Those that have the self-vulcanizing quality either contain powerful dryers like litharge or contain magnesia and a powerful accelerator that serves to cure the mass once it is exposed to the air.

The majority of the self-vulcanizing cements, however, are really quick drying and the formulas are very old.

For example, Hall's cement dates back many years. It is:

Bisulphide of carbon	96 parts
Pure india rubber	4 parts
Asphaltum	1 part

Mix rubber and bisulphide of carbon, and let stand 36 hours. Afterward add the asphaltum and the cement is ready for use.

Similar to it is:

Fine Pará rubber (sheeted)	4 pounds
Gutta percha (good quality)	8 pounds
Bisulphide of carbon	32 pounds

A little naphtha may be mixed with the solvent to cheapen it.

For filling cuts in solid tires the following have been used:

India rubber	70 parts
Petrolatum	5 parts
Litharge	5 parts

also

Gutta percha	6 parts
Rubber shoe varnish	60 parts
Naphtha	60 parts
Litharge	2 parts

For hastening the cure of cements the same rules apply in the use of accelerators that are given in connection with tire compounds.

CHAPTER VIII

SPREADERS AND IMPREGNATORS

Applying Rubber to Tire Fabrics

MOST tire building fabrics are either frictioned on both sides or impregnated to fill the meshes with rubber, after which a skim coat of rubber solution is given to one or both sides according to the use to which the fabric is to be put. For this latter operation spreaders are used, of which there are several, some for ordinary and others for cord fabrics. Both kinds of fabric are impregnated with rubber by devices which draw them through solution tanks and dry

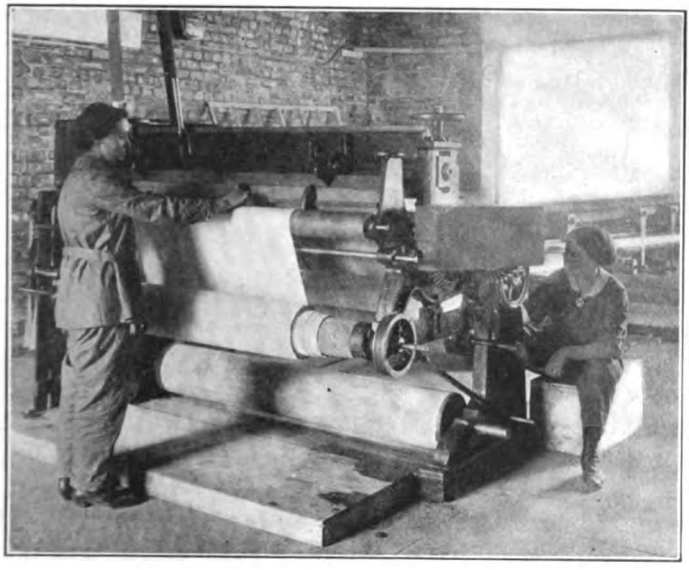

A Modern Spreader

them in vacuum, the solvent being condensed and recovered for further use, while the fabric is revolved on aging rollers in a cooling chamber previous to cutting into strips.

In preparing the rubber solution for spreading or impregnating, the seasoned compound slabs are milled, broken down and washed in special cement mills and there mixed with sufficient naphtha to give the desired consistency.

The fabric to be coated is mounted in a roll at one end of the spreader, whence it is passed between a hard roll and a knife edge. The rubber solution is poured on to the fabric just before it passes under the knife edge, which scrapes off all but a very thin coating. The fabric then passes over a steam chest where the naphtha is evaporated, leaving a thin layer of adhering rubber. It is finally rolled up between cloth liners to prevent sticking. Several spreader coatings are required.

For the manufacture of cable cord tires and woven cord fabrics there are special machines for impregnating single cords, threads and yarns with rubber solution and drying them prior to their use in cord laying machines and cord fabric looms.

SPREADERS

Hopewell Enclosed Spreader

This machine proofs and dries the fabric within an enclosed chamber from which the volatile vapors are conveyed to a separate apparatus where the solvent is recovered. The plates designated by *A*

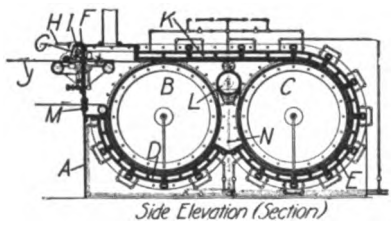

Hopewell Enclosed Spreader

in the illustration enclose the revolving steam-heated cylinders *B* and *C*. Supplemental heat is furnished by the sectional steam plates *D*, *E* and *K*.

The spreading mechanism is bolted to the frame at *F* and comprises a transverse chamber in which a scraper travels back and forth automatically cleaning the back of the hinged spreading knife *G* that is raised by hand levers *H*. The chamber *I* is provided with a fabric slot opening into the dryer and extending the entire width of the machine.

A metal fabric supporting strip closes the bottom of this chamber and passes around a transverse roller that is raised or lowered to adjust the distance between the fabric and spreading knife.

The dough is spread on the fabric *J* in front of the knife and seals the opening through which the web passes into the vaporizing

chamber. Revolving knives remove foreign particles and imperfections and the coated and cleaned fabric passes around heated drum *C*, over water-cooled roller *L* and around drum *B*, passing out through opening *M*, sealed by felt-covered rollers. The volatile vapors are conveyed to a brine-cooled solvent condenser of the usual coil type where the solvent is recovered.

Burdin Cord Fabric Spreader

The weftless fabric consisting of parallel cords is fed between liquid solution rollers and then under a spreading knife whence it passes through a dryer and is then spooled with a liner between the rubberized fabric.

Devine Spreading Machine

In this machine for proofing fabrics the spreading and drying operations and the recovery of the volatile solvents are conducted in a closed chamber under a partial vacuum.

Referring to the diagram, a longitudinal cross-section view, *A* represents the vacuum drying chamber, *B* openings for the pipes lead-

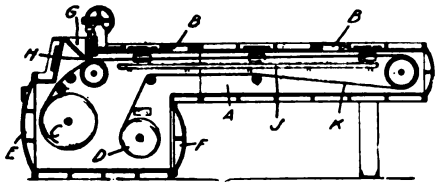

Devine Spreading Machine

ing to the condenser and air pump, *C* delivery drum, *D* receiving drum, *E* a removable front plate for introducing the fabric and *F* a back plate for removing the roll of proofed fabric. The other main parts include the feed hopper *G*, the spreading knife *H*, the heating table *J* and the fabric *K*.

In operation, the coating material flows from the feed hopper upon the fabric and is spread as it passes under the knife or "doctor." This coating material is dried as the coated fabric passes through the drying chamber and the vapors of the volatile solvent released in this drying operation are drawn off by a pump and recovered in a condenser. As this operation is carried on in a vacuum, the solvent is evaporated at a comparatively low temperature and the drying is effected quickly and thoroughly, preventing the escape of the vaporized solvent.

Turner, Vaughn & Taylor Spreader for Cord Fabric

This machine is especially designed for coating cord fabric, providing two coats with a short drying operation between the two immersions and a somewhat longer and more thorough drying process after the second coat.

The let-off for handling the fabric is carried on a separate stand on the feed end of the machine, delivering the fabric to the machine under a light tension. The fabric passes through the first tank and receives a heavy coat of cement, the excess being removed by a scraper bar, and the pressure being regulated by a spring. The fabric is then carried over two vertical steam-coils and partially dried before being

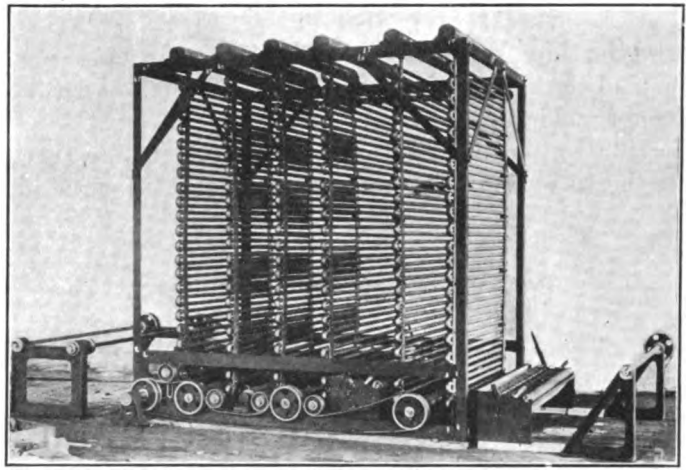

Turner, Vaughn & Taylor Cord Fabric Spreader

delivered to the second tank, at which point it is given an additional coat. It is then thoroughly dried over a bank of four vertical steam-coils and delivered to an external wind-up stand which also carries a friction let-off for the liner.

The fabric in passing through the machine is driven by six rollers carried on the bottom framework on plain bearings and driven by an endless belt. Idler rollers are provided over each drying section and are mounted on ball bearings, the first four rollers being of the spreader type, insuring a smooth finish.

Drying coils, tanks, driving and idler rollers are all mounted on an angle-iron frame which is rigidly braced and supported. This framework is enclosed except for a short distance above the floor

line by a sheet-metal cover, the driving side of which consists of removable doors. The side section includes a connection for an exhaust fan to assist in removing the vapor.

Due to the inflammable nature of the cement and vapors, it is usual to provide a separate building isolated from the main plant. For this reason the machine has been designed for countershaft drive so that the cement churns and exhaust fan may be driven from the same motor.

Soyer Horizontal Spreading Machine

This type of spreader is commonly used in France, although the vertical machine is sometimes preferred for special work. While

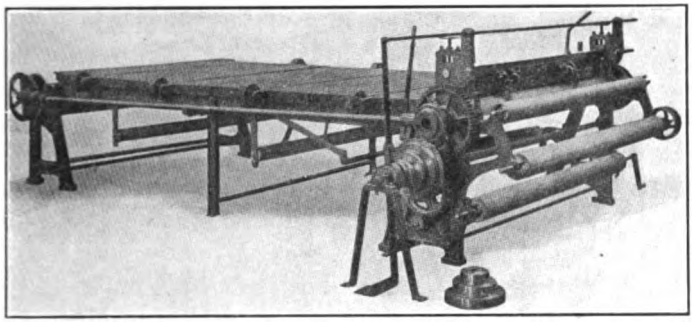

Soyer Horizontal Spreader

the horizontal type is built along the general lines of spreader construction, certain details, however, are different, and therefore of interest.

The rubber-covered feeding roller is 7 1/8 inches in diameter, 78.7 inches long, and is provided with an adjustable spreading knife and adjustable, compound guides. The cast-iron hot plates are eight in number, each section measuring 78.7 inches long by 19 11/16 inches wide and being provided with steam inlet and outlet connections.

The machine is belt-driven by a 3-step cone pulley and equipped with friction clutches, controlled by a bar extending over the front of the machine within reach of the operator, for starting and stopping the machine.

The rear fabric roller is driven from the front shaft by bevel gearing and a shaft connected by bevel gearing to the back roller and operated at the front by a hand-lever. The wind-up roller at the front is provided with a speed accelerator for rewinding the proofed fabric.

Thoma Calender Spreader

This invention employs a roller for applying the rubber solution to the fabric instead of the usual spreading knife or "doctor."

The dope is placed in the hopper *A* and a web of uncoated fabric drawn from the roller *B* over the guide roller *C* beneath the spreading cylinder *D*, over the guide roller *E*, thence over the heating pipes and drum cylinder to the take-up roller *G*. Power is then applied, rotating the cylinder so that its lower portion moves in the direction of the travel of the fabric. The web of fabric is driven by the cloth covered drum *F*, through gearing at the desired rate of speed relatively to the speed of the spreading cylinder.

The gate *H* is adjusted to deliver a sheet of dope of a predetermined thickness upon the surface of the roller which spreads it

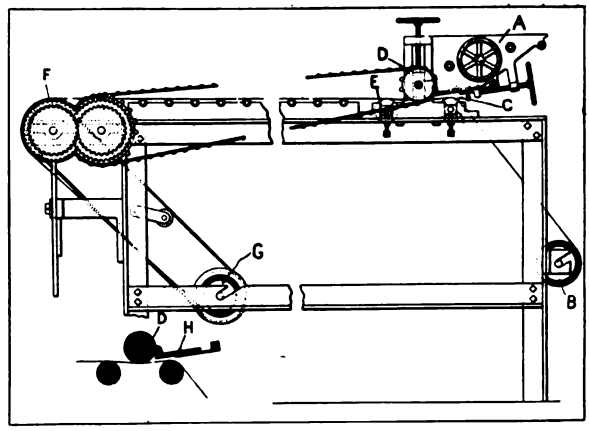

Thoma Calender Spreader

upon the fabric, condenses the coating and smooths it by its wiping contact so that a desirable finish is produced.

The coated fabric thereupon passes over the drying coils with the back or uncoated side of the fabric toward the coils so that the heat is applied through the fabric and back of the coating.

Chapman Electric Neutralizer

Rubberized fabric is easily electrified by friction and pressure, and it is thought that this phenomenon is also caused by the evaporation of the solvent naphtha from the cement, or by some unknown chemical action, such as oxidation or change in hydration of the rubber or fabric.

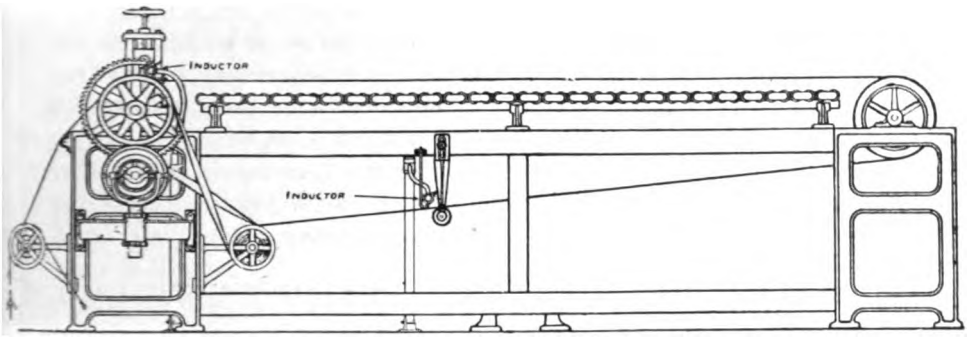

CHAPMAN ELECTRIC NEUTRALIZER

To minimize the fire hazard of the spreading operation, spreaders are equipped with devices for removing these static charges. The Chapman electric neutralizer distributes alternating charges at high voltages in minute quantities to the places where the static charges collect. The principle on which it works is the simple law of attraction and repulsion, that the static charge in any insulating material selects for itself the kind and quantity to exactly neutralize itself.

In the application of the Chapman neutralizer the transformer is located on some convenient wall and a single heavily insulated wire

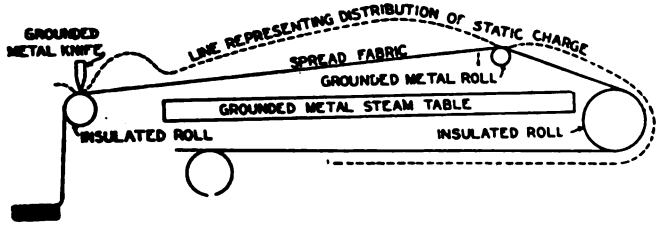

DISTRIBUTION OF STATIC ELECTRICITY ON FABRIC ON A RUBBER SPREADING MACHINE ON A COLD DAY

leads to the several machines to be treated. Each spreading machine is fitted with two "inductors" extending across the machine over the fabric. One is placed just back of the spreading knife and the other near where the fabric is rolled up. These inductors are placed so that the fabric passes them at a distance of two to four inches. The influence of the inductors extends through the air for several inches around them, and every portion of the fabric as fast as it comes within this region of influence is imperceptibly but instantly deprived of any electric charge existing upon it.

The result of this action is that the inductor at the head end of the spreader instantly and completely neutralizes every part of the fabric as fast as it leaves the spreading knife, before any charge imparted to the fabric can accumulate sufficiently to discharge to the roll, knife, frame or pipes in the form of a spark.

The object of the other inductor, treating the fabric just before it is rolled up, is to remove any slight charge redeveloped by the other rolls over which the fabric passes before winding up.

FABRIC IMPREGNATING AND DRYING MACHINES

Smith Tire Fabric Impregnator

Smith's machine, shown in elevation and cross sections, forces rubber solution by pressure and friction into the woven fabric of tire casings. It comprises a two-part annular mold, the upper and lower parts *A* and *B* of which are bolted together at *C*. The mold is chambered for steam and is fastened to a yoke *D*, supported on a column *E* at shoulder *F*, upon which it freely turns. The inner flange *G* of the core *H* is bored to fit the central column *E*. It is held between collars *I* so that it is free to turn. When the mold members *A* and *B* and the core *H* are in place, an annular space is left for the tire casing. The upper half of the mold is provided with conduits *K*, through which the

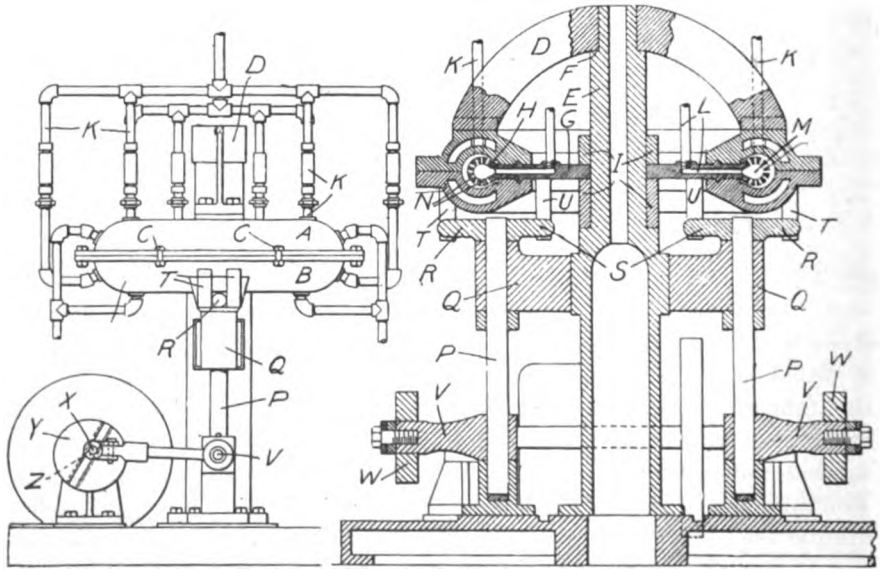

Smith Tire Fabric Impregnator

rubber filling solution is supplied to the outer fabric surface. The core *H* has conduits *L*, which deliver solution to the chamber *M* and thence to the inner fabric surface through passages *N*. The conduits *K* and *L* are connected to a solution supply tank by flexible hose permitting a movement of the mold and core. These parts are turned simultaneously in opposite directions by two vertical rock shafts *P*, journaled in fixed bearings in brackets *Q* and resting in cup bearings at the lower ends. Each rock shaft has cross arms *R* and *S* fixed to its upper end. The arms *R* contact with studs *T*, which extend downward from the mold *B*. Studs *U*, extending downward from the core flange, contact with the inner cross arms *S*. The lower end of each rock shaft is attached to a lever *V* which is connected by a pitman *W* with an adjustable wrist pin *X* in a slotted face plate *Y*, keyed to the driving shaft *Z*. The rotation of the driving shaft imparts a rocking motion to the shafts *P* and causes the mold and core to reciprocate in opposite directions.

The operation is as follows: After loosening bolts *C* the upper part of mold *A* is raised and the tire fabric placed in the mold. The parts are then bolted together and the solution forced through the conduits under pressure to the inner and outer surfaces of the casing, where it is rubbed into the fabric by the rotary reciprocating motion of the mold and core.

Destribats Vacuum Fabric Impregnating Machine

This machine provides an improved means of exhausting the air from the fabric and coating the material with rubber before the fabric comes into contact with the external atmosphere. The fabric is also heated by means of steam coils at the same time that the air is exhausted so that it is in a dry condition when it reaches the rubber.

Referring to the following drawing, which shows a cross section looking toward the end of the machine, the roll of fabric *A* to be treated is mounted upon the shaft *B* in the frame *C*. This frame is set upon rollers *D*, which run upon a track *E* in the bottom of the cylinder *F*. This cylinder has a removable door to allow the roll of fabric to be run in and out of the cylinder. The air is exhausted from the cylinder by means of an ordinary vacuum pump. Surrounding the roll of fabric is a series of steam pipes *I* with inlet and outlet at the rear end of the cylinder. On top of the cylinder is a trough *L* provided with a long slot *M* and a pair of flaps *N*, which prevent the liquid rubber from being drawn into the cylinder when the air is exhausted.

A roll of fabric which is to be impregnated with rubber is placed in the frame *C* and run into the cylinder. The end of the cloth *A* is then carried around the steam pipes *I* and under the roller *P*, and then

vertically through the slot *M* into the rubber. Before the cloth passes into the rubber, however, the air is exhausted from the cylinder and likewise from the interstices of the fabric, so that when the cloth enters

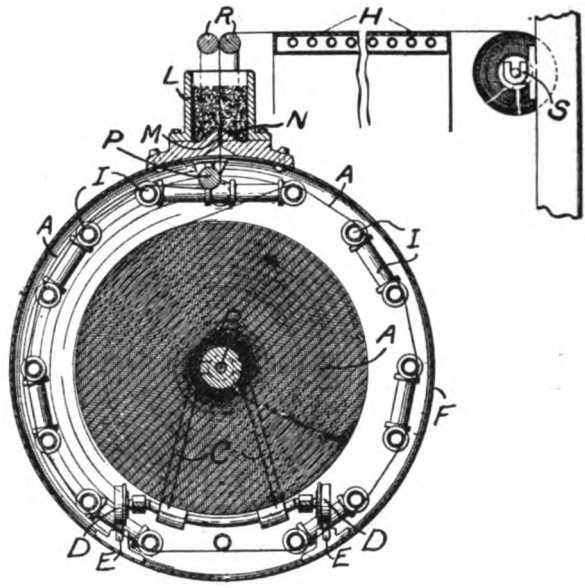

DESTRIBATS VACUUM FABRIC IMPREGNATOR

the liquid rubber the latter will be drawn into the spaces between the threads and the cloth become thoroughly impregnated. The coated fabric then passes between a pair of rollers *R* and over a heater *H*, after which the coated and dried fabric is wound up on the rollers *S*.

BATAILLE DRYING AND SOLVENT RECOVERING APPARATUS

The air space above or surrounding a proofed fabric from which solvent is being evaporated is completely enclosed, and facilities are provided for inspecting the fabric after passing the spreading knife. The vapor of the solvent is recovered in a closed system in which the vapor-laden air is drawn by a fan from the drying chamber through two refrigerators for condensation; the residual air being reheated and passing again into the drying chamber.

SUBERS FABRIC BAND STRETCHING AND COATING MACHINE

A band of fabric is formed, compressed, stretched and coated with rubber solution in a heated vacuum chamber and finally passed through a cooling chamber, according to this invention.

The illustration is a sectional view of a broken side elevation of vacuum chamber *A*, provided with suction pipe *B*, heating pipe *C* and stretching drums *D* and *E* around which the fabric band *F* passes. These oppositely placed drums comprise sections of reduced diameters that stretch each wrapping tightly until a certain amount of elasticity has been removed without injury to the fiber. The band enters through an automatically closing gate *G* and passes through the double gate *H*.

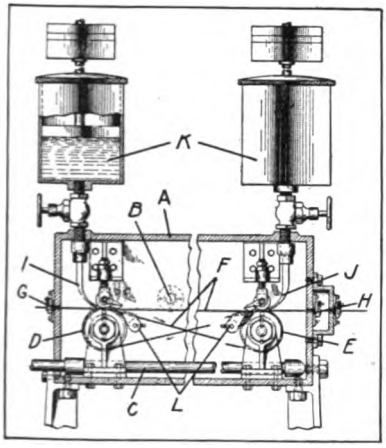

SUBERS BAND COATING MACHINE

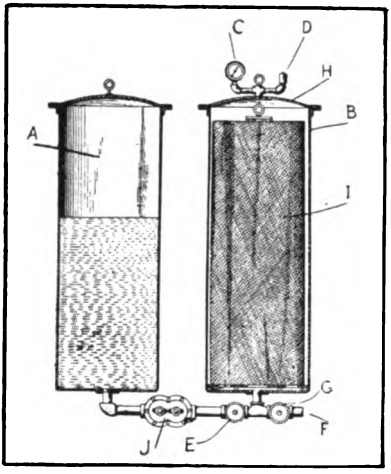

CARTER TIRE FABRIC IMPREGNATOR

Rubber solution is applied to the band through nozzles *I* and *J* from solution tanks *K* that are provided with weighted pistons for positive feeding. Adjacent to each drum are scraping devices *L* that remove the surplus rubber. The band is passed through a cooling chamber, not shown, in which a blast of air cools and hardens it so that it may be handled.

CARTER TIRE FABRIC IMPREGNATOR

The object of this invention is the introduction of a lubricant into pneumatic tire fabric, in the form of a suspension or emulsion in the yarn, threads or cords from which the fabric is woven, or into the woven fabric itself.

The form of apparatus used is shown in the illustration. It consists of twin cylinders, *A*, containing the liquid lubricant and *B*, the impregnating cylinder, containing the fabric to be treated, wound on a series of parallel rods to admit the free contact of the emulsion

or suspension with the inside of the roll. Mounted on the head is a gage *C*, to indicate the pressure on the inside of the cylinder, and an air-valve *D*, for the escape of the confined air.

The cylindrical tanks are united by a pipe connection. A valve *E*, controls the flow of the lubricating solution. A steam pipe *F*, controlled by a valve *G*, connects the cylinder *B*, with a supply of steam.

In operation the valves *E* and *G* are closed, the detachable head *H* removed and the roll of fabric *I* placed in the cylinder. The head being secured in place, low-pressure steam is admitted to the cylinder through valve *G*. This heats the fabric, and drives out the air through valve *D*. Valve *G* is then closed and valve *E* is opened. Cold emulsion or suspension from tank *A* enters cylinder *B* and comes in contact with the hot water vapor. Condensation follows, automatically producing a vacuum which allows the emulsion or suspension to permeate the interstices of the fabric.

After this takes place atmospheric pressure is admitted to cylinder *B* and the surplus fluid pumped back into the tank *A* through the pump *J*. The fabric is then removed and thoroughly dried, leaving the lubricant in intimate contact with the fibers.

Kremer Apparatus for Impregnating Tire Fabrics

A vertical section of the apparatus is shown in the illustration in which *A* is the solution tank, *B* the drying chamber and *C* the compartment where the saturated fabric is wound up on a roller.

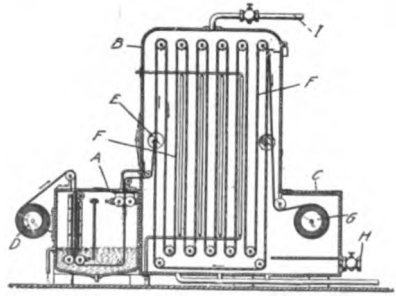

Kremer Fabric Impregnator

In operation the fabric is fed from the roll *D* into the rubber solution, where the air is removed by a pair of rollers that also force the solution into the interstices of the cloth. As it passes out of the tank the excess rubber is removed by another pair of rollers. The fabric, which is attached to the cross bar *E*, is then drawn through the drying

chamber by the endless chain belt *F*, driven by a series of sprocket wheels, and is wound up on the roller *G*. Hot air is introduced to the drying chamber through valve *H*, and circulation is maintained through pipe *I* located at the top of the chamber. The condensed solvent is drawn off through a pipe provided for that purpose at the bottom of the chamber.

Shaw Vacuum-Drying, Impregnating, and Solvent Recovery Apparatus

This apparatus has been specially designed for impregnating tire fabrics, belting and hose duck, and other fabrics; drying after impregnating, and recovering the volatile solvent employed.

This complete operation takes place under vacuum. The material is first dried by passing it from the top roller to the bottom roller between the heating tables. The solvent is then admitted to the chamber

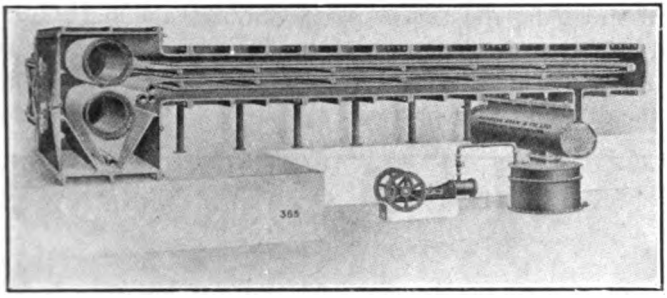

Shaw Drying, Impregnating and Solvent Recovery Apparatus

and thoroughly impregnates the material owing to the air having been entirely expelled. The material is then rewound on to the top roller, passing between rollers to squeeze out surplus solvent, and afterwards between the heating tables to thoroughly dry it.

The vapor from the drying chamber is drawn through a multitubular condenser by means of a vacuum pump, and the condensed solvent is collected in the receiver.

Devine Impregnating, Drying and Solvent Recovery Apparatus for Fabrics

The following illustration shows a unit of an apparatus in which fabrics and tire duck may be impregnated with rubber solution, dried in a vacuum and the solvent subsequently recovered for reuse.

In front of the first section is placed a chamber which is fitted with a sealed connection, separating it from the dryer. The first section is built of sufficient size to contain the entire roll of fabric and is equipped with an impregnating tank filled with the rubber solution.

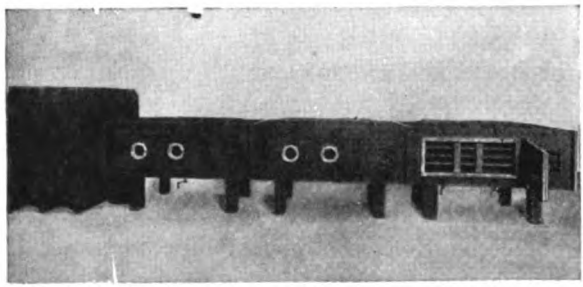

DEVINE IMPREGNATING AND SOLVENT RECOVERY APPARATUS

As the roll unwinds, the fabric passes through the tank and is impregnated with the solution. The fabric is then automatically taken into the large chamber of the dryer and thence runs through the entire length of the dryer in four passes.

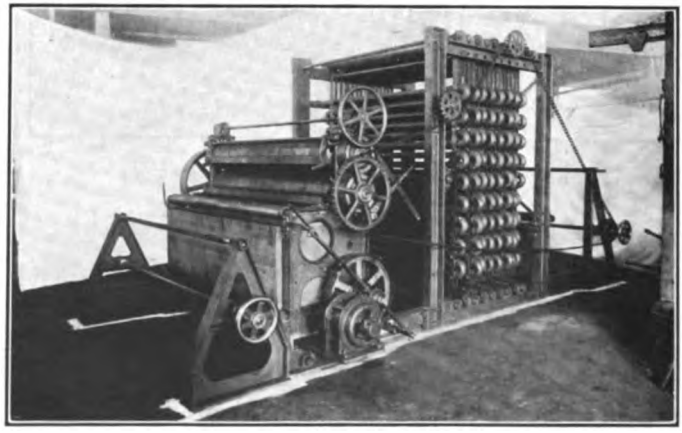

BANNER CORD FABRIC IMPREGNATOR

The heat vaporizes the solvent in the impregnated duck, this vapor going over to the condenser, where it is condensed, and the solvent passes through the solvent recovery apparatus where it is recovered. The finished, dried, impregnated duck is wound up on another roll and after the operation is completed, the door of the unit is opened and the finished roll removed.

Banner Cord Fabric Impregnator

Cord fabrics used in the manufacture of cord tires are impregnated with rubber solution before the skim coat is applied by the calender. That constant improvement is being made in the design and construction of impregnators is shown in the illustration of the cord fabric impregnator on the opposite page.

The fabric from the stock roll is fed over a smoothing roller and into the tank, where it becomes saturated with the rubber solution. From the tank the saturated web passes between pressure rollers so adjusted that the solution is forced into the interstices of the fabric

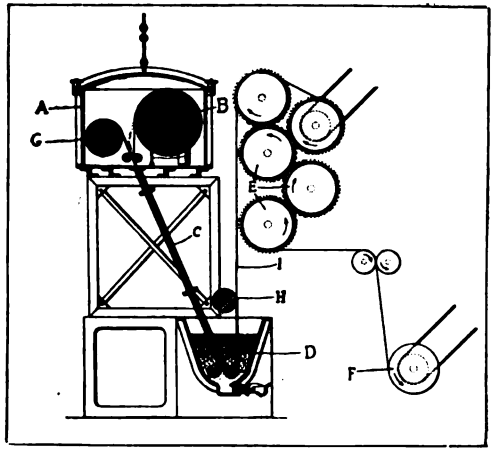

Thropp Tire Fabric Impregnator

in an even and thorough manner. The impregnated fabric is then passed in festoons between the steam-heated coils of the dryer, where the solvent is evaporated. While not a part of the equipment, a solvent recovery apparatus can be attached to this machine.

After drying, the impregnated fabric is wound up on a stock shell and is ready for the final skim coat.

Thropp Machine for Impregnating Tire Fabric

Tire fabric is subjected to a vacuum and then passes by means of a channel through an impregnating chamber containing rubber solution that forms a seal for the channel.

A vertical section of the apparatus is here shown, *A* being the vacuum chamber enclosing the fabric roll *B*, and *C* the channel com-

municating with *D*, the solution tank. *E* indicates the drying rolls and *F* the fabric wind-up roll.

In operation, the free end of the fabric is fastened to a cross-bar attached to a pair of metal ribbons, the ends of which are corked on roll *C*, the other ends passing downward through the channel and impregnating tank and are attached to the roll *H*, which is revolved by hand, threading the fabric through the apparatus. The fabric is then attached to the apron *I* which carries it between the drying rolls and finally to the wind-up roll.

CORD, THREAD AND YARN IMPREGNATING MACHINES

Good Brothers Thread Coating Machine

The machine invented by Good Brothers is designed for water-proofing threads, which are then woven into fabric without further spreading. The threads are first boiled in a solution of alkali and

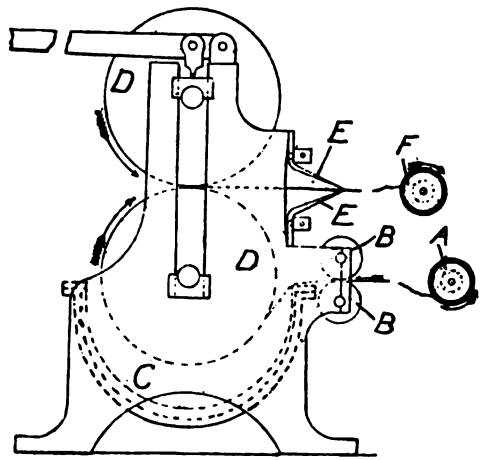

Good Brothers Thread Coater

then steeped in a tanning solution. The thread passes from the bobbins *A* through carding rollers *B* into the bath *C* containing the water-proofing compound; then between the large rollers *D*, which are faced with cork. The coated threads then pass through the spring nippers *E* and are wound up on bobbins *F* preparatory to weaving into fabric.

Reichelt-Helbing-Nienaber Thread Coating Apparatus

With this apparatus threads are coated by passing them over rollers and through vessels containing heated rubber compound. The threads

are then passed through a drying chamber, after which they are wound on bobbins ready for weaving. The threads pass from the drums *A* through vessels *B* heated by burners *C*. The surplus material is removed at *D* and the threads are dried in a chamber *E* heated by burners

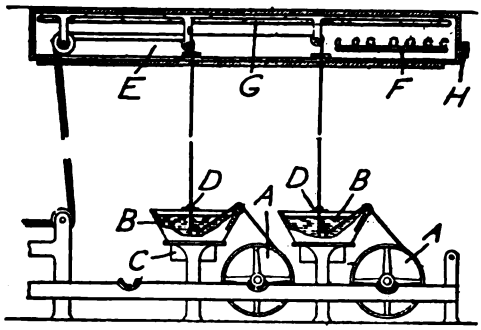

REICHELT-HELBING-NIENABER THREAD COATER

F, steam pipes *G* or hot air supplied through an opening *H*. The same thread may pass consecutively through two coating vessels, returning to the drying chamber after each immersion.

SLOPER HIGH PRESSURE THREAD SOLUTIONING APPARATUS

In Sloper's apparatus for covering with rubber the cords used in the manufacture of cord tires, the cord *A* passes into the tube *B* and then through the lower end of the cylinder *C*. This cylinder is filled with rubber solution under pressure exerted by a hydraulic piston,

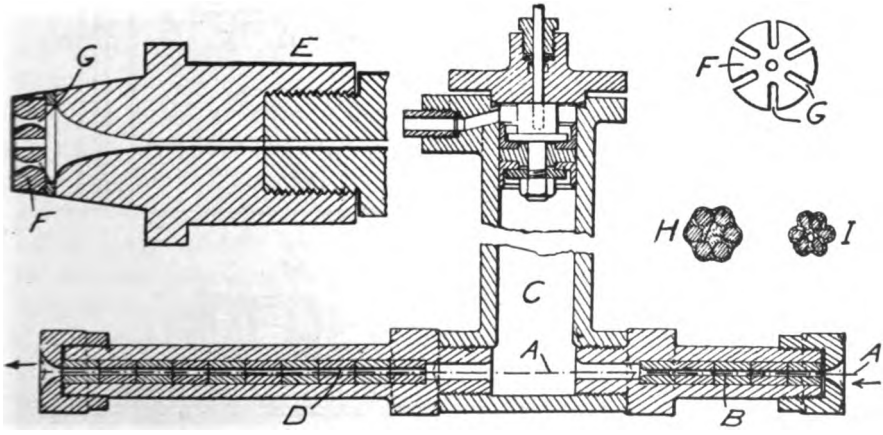

SLOPER THREAD SOLUTIONING APPARATUS

and this pressure serves to force the rubber solution through the strands of cord. The latter then passes through the tube *D*, which is longer than the tube *B* in order to prevent leakage of the rubber solution from the cylinder. The tubes *B* and *D*, through which the cord passes, are made up of short blocks in order to provide an easy means of threading the cord through the tube. This also allows the use of blocks with different sized openings for coating various sized cords.

Where several strands of cord are to be coated and joined into a single strand, a tube *E* with a perforated guide *F* is substituted for the single tube *B*. The several strands of cord pass through the openings *G*, which separates the cords as they pass through the cylinder. The several cords are then joined together and pass through the tube *D* in the form shown at *H*. The cords may then be vulcanized in this position or they may pass directly to the machine for building up tires, hose or other articles. At *I* is shown the relative shape and size of the vulcanized strands and the manner in which they contract during vulcanization.

As the unit threads slowly enter the tubes they are met with a gradually increasing pressure of rubber solution which expels the air from between the fibers of the threads, the rubber solution taking its place.

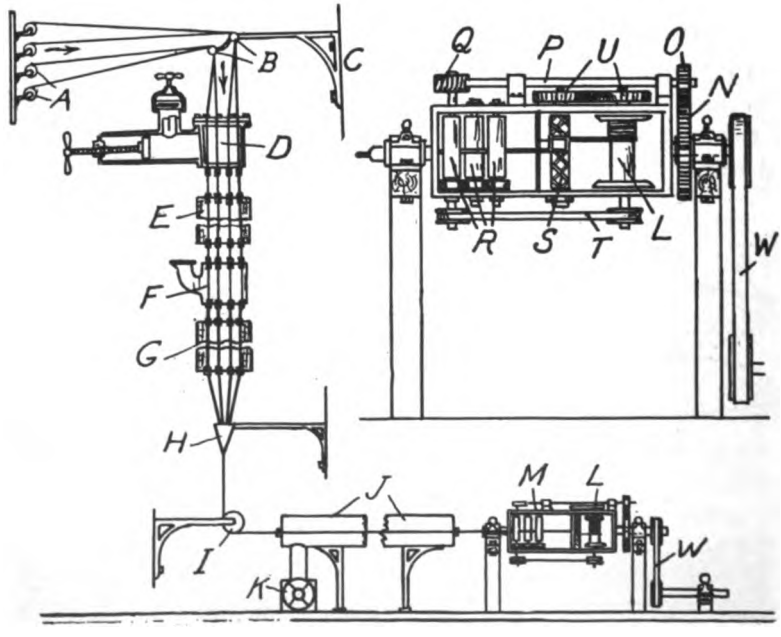

LATOUR CAPELLE THREAD COATER

Latour-Capelle Thread Coater

In the Latour-Capelle thread-coating apparatus the threads are drawn through a chamber containing the rubber solution under pressure, then through a heated drying chamber, after which the threads are twisted together. The threads pass from bobbins *A* over glass guides *B* on a bracket *C* and through a reservoir *D* containing the rubber solution under pressure. The coated threads then pass separately through a heated drying chamber *E*, which may be any desired length. The threads next pass through a second reservoir *F* and through a second drying chamber *G*, after which they are assembled by passing through a funnel *H*. The assembled cord then runs over a guide pulley *I* and through a cylinder *J*, which is cooled by the fan *K*. After being cooled the cord is twisted as it is wound up on the bobbin *L* in the revolving frame *M*. This winding device is more clearly shown in the enlarged view above the smaller. A gear *N* in the shaft of the frame *M* drives a pinion *O* on the shaft *P* carrying a worm *Q* which rotates three geared vulcanite rollers *R*. The cord passes between these rollers on its way to a reciprocating carriage *S*, which guides the twisted cord as it is wound up on the bobbin *L*. The latter is driven by an elastic belt *T* from a pulley on the shaft of the first roller *R*. The carriage *S* is driven by gears *U* from the shaft of the bobbin, while the entire apparatus is actuated by the driving belt *W*.

Bayne-Subers Thread Coater

The Bayne-Subers machine receives the thread from a supply reel, separates the strands, passes them through rubber compound and then retwists the strands into a single thread which is impregnated with the rubber. A spool *A* containing the thread is mounted at the upper end of the frame *B*. The thread passes through a guide *C*, after which the strands are untwisted and passed separately through perforations in the top plate *D* of a revolving cylinder *E*. This cylinder is partially filled with the rubber compound with which the strands are coated. The strands pass through perforations in the bottom plate *F* of the cylinder, after which they are again twisted together by the rotary motion of the cylinder. Before passing into the open air and before being entirely reunited, the single strands are partially dried by an air blast passing through the drum *G*. The coated cord then passes through another bath of solution in the funnel-shaped vessel *H*. The surplus solution is scraped off from the cord by a reduced outlet nozzle at the lower end of the vessel *H*. The cord is again dried by passing through an air blast in the cylinder *I*, and finally compressed and shaped into cylindrical form by a pair of gear driven rollers *J*, which also serve

as a feed device to pull the thread from the supply reel and through the perforations in the coating cylinder. In order to provide easy means of introducing the separated strands into the perforations in the cylinder,

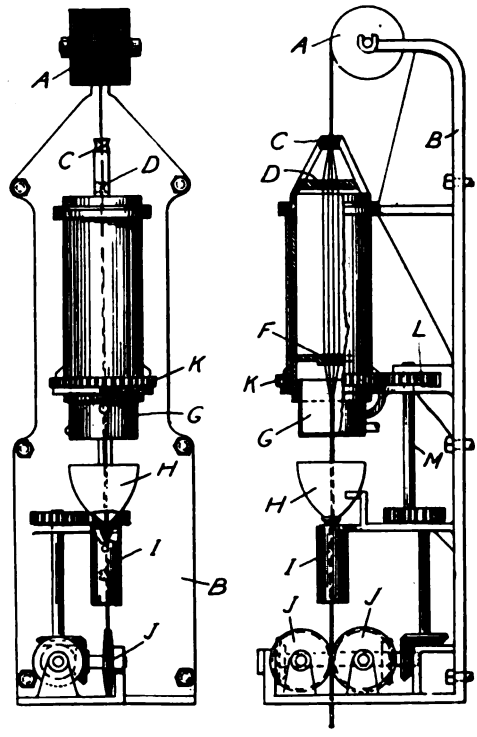

BAYNE-SUBERS THREAD COATER

the latter is divided vertically so that the division line cuts the perforations. The cylinder is rotated by means of a spur gear K engaging a gear L on the upper end of the shaft M.

DENMAN YARN IMPREGNATING APPARATUS

This comprises a U-shaped solution tank in which the threads to be impregnated are immersed for a considerable period, the surplus liquid removed from the threads, which are then delivered to the twisting apparatus.

TEW CORD IMPREGNATING AND DRYING APPARATUS

Briefly, the apparatus consists of a cylindrical, steam-heated vacuum-connected pipe through which the cords are passed, being im-

pregnated and dried in transit while the solvent vapors are drawn off and recovered. In the illustration are shown vertical sections of the left and right hand ends of the apparatus, which is adapted to treat six cords. The covers *A* and *B* are removed from their respective ends and the cords *C* are threaded through the tubular nipples *D* and *E*. The cord ends are attached to a rider *F*, mounted on a sprocket chain actuated by a hand crank *G*, whereby they are carried through the

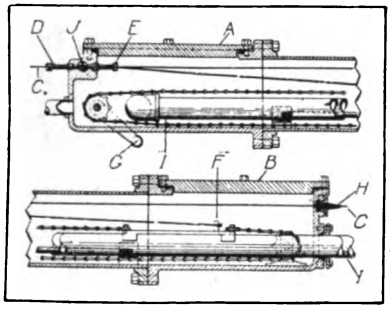

TEW CORD IMPREGNATOR

pipe to the opposite end and are threaded through the outlet nozzles *H*. After the covers are bolted down, steam is passed through the pipes *I* and the vacuum pump operated, meanwhile rubber solution has been forced into the chamber *J* under pressure. As the cords pass through this chamber they are impregnated and subsequently dried in transit through the apparatus.

TEW RUBBERIZED HOLLOW CORD MACHINE

According to this invention, the individual textile strands are first impregnated with rubber solution, then dried, twisted and passed

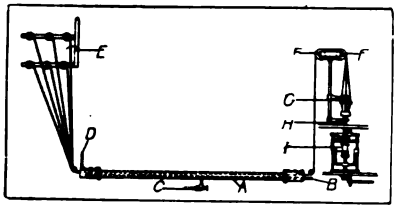

TEW RUBBERIZED CORD MACHINE

through a tubular die, forming a hollow tubular cord. The apparatus shown in side elevation comprises a 20-foot chamber *A* heated by steam pipes *B* and provided with suction pump connections *C*. Rubber

solution is pumped through pipe *D* into a chamber located between and communicating with six outer and six inner hollow nipples, through which the six strands from creel *E* are passed and impregnated with rubber. As the strands continue through the apparatus they are heated and dried and led over guide rollers *F* to the twisting apparatus *G*. Here, the strands are conveyed around a central core and passed through a tubular die *H* that forms the hollow cord, which is wound up by the spooling mechanism *I*.

Hoover Cord Impregnating Apparatus

The individual strands of a cord are momentarily untwisted, impregnated with rubber solution, and twisted again during the passage of the cord through this apparatus. The illustration is a vertical sec-

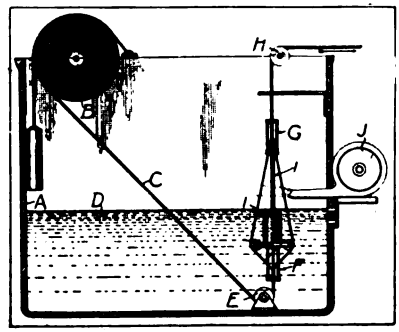

Hoover Cord Impregnator

tion of tank *A*, on which is mounted reel *B*, from which cord *C* passes through solution *D* around pulley *E* to the spreading device *F*, where the individual strands are separated and then passed through the retwisting device *G*, over pulley *H*, to the wind-up reel. A weight *I*. carried on a center rod, provides means for actuating the suspended spreading device by gravity.

When the cord is pulled in the direction of the arrow the spreading device is lifted and the action of the weight untwists the cord in cage *F* and retwists the cord in cage *G*, the individual strands being impregnated during their upward passage through the solution. The coated strands are dried in a current of warm air produced by a fan-blower before retwisting.

CHAPTER IX

PNEUMATIC TIRE FABRICS

Irish Linen the First

When Dunlop, of Belfast, first made pneumatic tires, he found that the strength of the rubber could not be relied upon to hold the air; so like a good Irishman, he lined his thin-walled tires with Irish linen. Imitation being the strongest instinct in man, his Scotch and English copyists also used linen fabrics, and so did the Americans, when they began to make pneumatic tires. Later, when unexplainable difficulties arose in connection with their tires, they delved into the inner workings to find out what was the matter. Some prominent tire makers of America seem to have been the first to fix the blame upon the kind of fiber instead of the kind of weave, and they soon discarded flax for cotton. They figured that flax threads chafed each other more than did cotton, and also suspected that the flax might be less resistant to the action of heat during vulcanization.

The American Cotton Fabric

Whatever the true explanation, cotton duck seemed to work better than linen, and Sea Island cotton best of all. Sea Island cotton originated upon a single island off our southern seaboard. The staple is a long, fine, silky one, and it contains more natural wax, and is whiter and better than the Egyptian staple. But there is not enough of the original island crop to anywhere near supply the demand, and much of it goes into the fabrication of expensive yarns used in making fine lace. Seeds of the original Sea Island cotton have for years been planted in suitable soil on the mainlands of Florida and Georgia, and thence comes the present limited supply of this superior cotton. But Sea Island cotton has ceased to be a factor in the weaving of tire fabrics. According to reliable statistics, it enters into only 9/10 of one per cent of this product, the balance being of Egyptian, Peeler and Arizona cotton. In 1919 some 450,000 bales of long-staple cotton were used for tire fabrics, divided as follows: Egyptian, 250,000: Peeler, 145,000; Arizona, 50,000; Sea Island, 5,000.

Substitutes for Cotton Fabrics

Even though cotton is far inferior to hemp or flax in strength, it seems to be more pliant. Whether as a reward for their ingenuity

or for some other reason, New York and New England mills speedily monopolized the manufacture of American tire fabrics, and also taught others how to follow their lead. Since that time cotton has been the standard material for tire fabrics, though ramie has been tried, silk has been used to some extent for bicycle racing tires, especially in England, and experiments have been made in the twisting of wire with the component threads of cotton or other fibrous material.

Cotton Covered Wire

For example, a breaker strip fabric was invented which, it is claimed, has all the advantages of the usual breaker strip and at the same time is capable of greater wearing qualities, adds resiliency to the tire, prevents expansion, distributes the bending action over a larger area than is the case with an ordinary fabric and has a greater "friction test."

It consists of longitudinal warp strands, composed of wire covered with a winding of cotton in the nature of insulated wire. These are interlaced with oblique filling strands, formed by looping the filling about the outer warp, thus forming a selvage edge. This forms two sets of filling strands, each made up of two separate strands, run in one direction and always on one side of the wire warp, and the strands running in the opposite direction are always on the other side of the warp, the pairs of filling strands being interwoven where they cross between the warp.

Different methods and numbers of strands may be used in braiding or weaving the fabric, according to the nature of the fabric desired, depending upon its weight, strength, etc., as concerns the size of the tire in which it is to be used. The fabric is made in strips of substantially the width required for the breaker strip.

Asbestos

Long-fibre asbestos spun into thread has been suggested and even used to a certain extent as a substitute for cotton in the manufacture of woven tire fabrics. While some experts hold to the opinion that it cannot have the tensile strength of cotton fabric, its possibilities in connection with an unusually broad breaker strip extending about its side walls and composed of fine wire, bound with asbestos, woven into fabric and rubberized are of much interest. Time will substantiate the sweeping claims of superiority based upon strength and non-conductivity of heat if they be well founded. Meanwhile it is certain that mineral asbestos is not rotted by moisture and grease percolating through cuts in the tire tread and carrying along some

of the sulphur of vulcanization. Herein, perhaps, lies its chief claim to notice as a possible substitute for cotton tire fabric.

The substitution of a stronger material for cotton necessitates the introduction of a fiber which has not the necessary properties of elasticity and flexibility. Any increase in strength without these qualities would not be considered an improvement, but rather a detriment. In twisting wire with cotton threads the difficulty encountered is to secure a wire of such a material as will possess the same elasticity as the cotton. Another feature of this construction is that the wire will tend to cut the cotton or other fibrous material.

Hemp and Flax

There is little positive proof that cotton is intrinsically better than linen in tire construction, and the natural supposition would be that hemp is the ideal material for this purpose, being the strongest and softest of all the true fibers. The longest Sea Island cotton measures perhaps two inches, while hemp fiber grows 10 to 15 feet long, and is stronger than cotton almost in the same proportion. Flax fiber is about 3 feet long, nearly as flexible as cotton, and is many times as strong. As for the tendency of hemp and flax to absorb and hold water, they can be rendered practically proof against decay by treating them with ordinary preservatives. As for chafing in the tire, due to the continuous bending, there is no sound reason for believing that cotton behaves any better than linen in this respect.

The most probable reason for the change was that linen manufacture is best understood in Ireland, while the English and Americans best understand cotton, and are best equipped for it in machinery and organization. The American mills, which first used cotton for tires were regular cotton mills, tire fabrics being only one branch of their business; and it is but natural that they would try to use cotton for the purpose. It was the same with the English, and as Continental tire makers generally get their tire fabrics from England, the whole world used cotton.

Fabric-less Tire Experiments

The use of tire building material composed of rubber and cotton or other fiber in which no fabric or other woven or spun foundation is employed has also been suggested. Under the Swain patent loose staple cotton, hair or threads are distributed in thin layers, the fibers of one or more layers being angularly disposed to the fibers of the adjacent layers. When a sufficient number of layers have been piled together they are submerged in a solution of rubber.

After the excess rubber has been pressed out the material is sheeted. The claim is made that tires made up of this material are non-skid and puncture proof, and that rubber heels of the material wear longer and will not slip on wet pavements.

Under the Dew patent, strips of tire building material are formed of unspun fibers laid parallel to one another in the direction of their length and approximately one fiber thick. These are impregnated with liquid adhesive and several of them superposed spirally or helically relatively to the tire forming member, after which an outer cover is applied and the complete tire vulcanized. The inventor has patented a machine for forming these strips.

Sources of Cotton Supply

So rapidly has the production of pneumatic tires increased in recent years that the manufacture of tire fabrics has become one of the most important of the cotton textile industries, and the chief American use of long-staple cotton. Not only that, but it has been instrumental in the great development of cotton growing by irrigation in the Southwest, which promises soon to become the principal American source of extra stapled cotton.

Effect of the War

During the early years of the automobile the supply of Sea Island cotton sufficed for the entire pneumatic tire output. Now that supply is utterly inadequate, and for several years tire fabric weavers have depended chiefly upon imported Egyptian long-staple cotton. Toward the close of the war, with decreasing imports from Egypt, considerable quantities of Peeler, Bender and similar extra staple cottons grown on the bottom lands of Alabama, Mississippi, Louisiana and Arkansas were also used for this purpose.

A Southwest Development

Although the United States provides considerably more than half of the world's cotton production, and exports annually more than half the year's ginnings, it does not grow an adequate supply of long-staple cotton to meet the American demand for tire fabrics, thread, knit goods, lace and other products requiring great strength. Of the 420,995 bales of foreign cotton imported into the United States during the fiscal year 1916, the year previous to the British embargo on Egyptian cotton and to American participation in the war, statistics show that 350,796 bales were long-staple Egyptian. At least half of this was used in the manufacture of tire fabrics.

for only 88,778 bales, or considerably less than 1 per cent. of the total 1915 American cotton crop of 11,191,820 bales, was of the Sea Island variety. With slight prospect of any considerable increase in this percentage it is not surprising that the phenomenal growth of the cotton planting industry in Arizona, southern California and northern Mexico since 1909 should have set tire manufacturers and fabric weavers to thinking. Several of them were even stirred to action, with the result that a few tire companies already maintain their own cotton plantations, while several others have given financial support to cotton planters in the Southwest by contracting to take the entire crop from large acreages for various periods of years.

Huge American Cotton Consumption for Tires

Pneumatic motor vehicle tires consist of 23 to 25 per cent. cotton and vary from about 2¼ to 8 pounds of fabric each according to size, 5 pounds each being a fair average for the entire American output. As the 1917 output of pneumatic automobile tires was reported by the War Service Committee of the Rubber Industry to have been 25,300,000 tires, about 126,500,000 pounds of fabrics, equivalent to 253,000 bales of long-staple cotton were required to meet this demand alone. Fully 300,000 bales were consumed for the 1918 output of about 30,000,000 pneumatic tires needed for new equipment and replacements on the 6,088,169 motor vehicles registered at the end of 1918. With the 1918 production of Sea Island cotton reported as 83,140 bales, of which only 66,000 were consumed in America, and the imports from Egypt for 1918 only 113,961 bales, and not all of the cotton from either source used for tire fabrics, it is obvious that 150,000 bales or more for this purpose consisted of Egyptian Pima or Durango varieties from the Southwest, and Peeler and Bender varieties from the Gulf states.

It is encouraging indeed to observe in these figures that American planters are apparently devoting more attention to extra stapled cotton varieties than hitherto. Just what the pneumatic tire output for future years will call for in long-staple cotton can be readily estimated. The 1919 program of automobile manufactures called for about 1,500,000 new cars, which, with the 6,088,169 cars previously in operation, required during the year some 37,500,000 tires for new equipment, replacements and spares, calling for some 375,000 bales of cotton. At this rate of automobile production, and making a generous allowance for used cars going out of service, 10,000,000 cars will be in operation by the year 1923 at the latest, this being the number of cars which automobile men assert can be maintained in this country with an annual

replacement of 2,000,000 cars, assuming an average life of five years per machine.

On this basis an annual output of 50,000,000 tires will be called for, requiring 500,000 bales of long-staple cotton. Thus 600,000 acres planted to Egyptian or Durango cotton in the Southwest and scientifically cultivated would render the American tire industry independent of cotton imports, and this is only about two-thirds of the unimproved land in the Imperial Valley of California alone that can be irrigated by the available water supply, and which can be even further increased by the building of reservoirs.

Various Types of Tire Fabric Weave

From the very outset American mills have been exceedingly faithful and thorough in their researches and efforts. They welcomed every idea regarding the use of cotton for tire fabrics which was presented to them, and it is said that they made 500 or 600 different kinds of tire fabrics for their customers, embodying every kind of thread or weave that they could hear of. When the automobile business arose, it was the great rubber companies which had made cycle tires that supplied the tires for the new industry. It was soon found, however, that an automobile tire is more than a big bicycle tire, and many new firms sprang up to meet these changed conditions.

The bicycle tire makers succeeded in covering the field of fabric making very thoroughly, developing pretty much every kind now used. Some bicycle tires had only one thickness of fabric, and when several

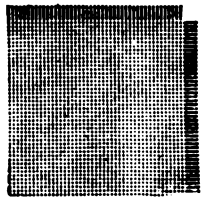

Ordinary Closely Woven Tire Fabric

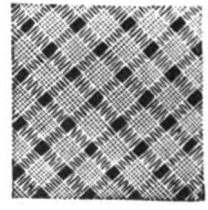

Goodyear Rivet Fabric

plies were used, they had not to contend with the fearful side strains to which motor tires are subjected, and which tend to tear the rubber tread from the canvas or separate the different layers. There was, therefore, no particular need of special fabrics, ordinary frictioning being sufficient to hold the layers together.

The reason why the duck in rubber tires is cut on the bias, with the threads diagonal to the tire, is now quite generally understood.

When the first high wheeled bicycles were made, the wire spokes ran radially to the rim. The power being applied through the hub, the wheel developed a twisting motion around the hub. The hubs were then made with the spokes running out at a tangent, and this trouble ceased. When pneumatic tires were first used, the canvas was naturally laid straight; but since the power had to be delivered through the tires, it was soon found necessary to have the threads of the tire fabric run at a tangent with the rim, so that they would be in the line of strain in

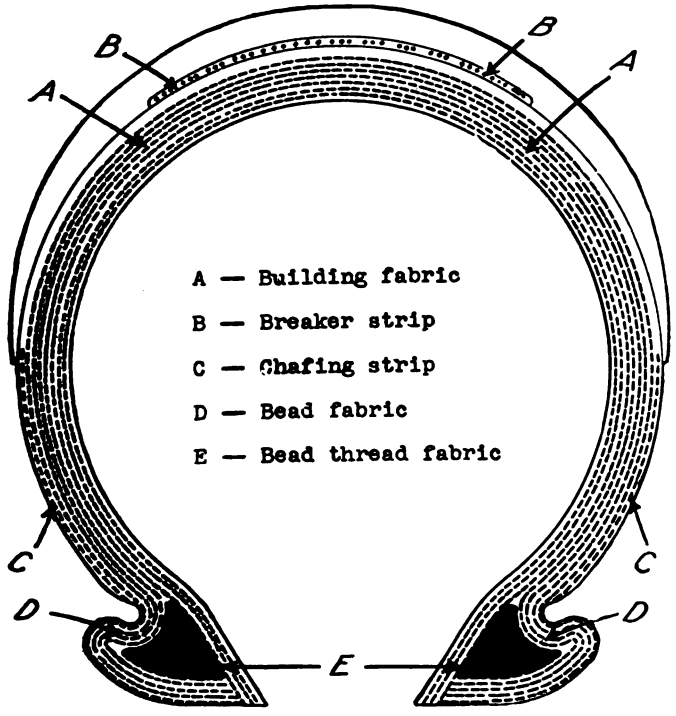

CROSS SECTION OF STANDARD AUTOMOBILE TIRE

driving or checking the wheel. Considerable in a bicycle tire, this driving strain became vastly more important in the motor tire.

The cross-section of any standard pneumatic automobile tire makes clear at a glance the general arrangement of the different plies of fabric, the duty of each varying with the position occupied in the finished product. The purpose of this fabric and rubber carcass is to protect and hold the inflated inner tube and, at the same time, transmit to the outermost part of the tire, called the tread, the driving impulse exerted

at the hub of the wheel. The carcass serves as a barrier between the inner tube and the blows incident to irregularities of the roadbed, and here resiliency is desired to obtain the cushioning effect which makes for the comfort of the occupants of the car.

Constrictive Fabrics

Double tube tires are held to the rim by some fastening; but the single tube tire depended, for its hold, upon its own tendency to grip the rim. This necessity led to the development of the constrictive fabric, which was laid on diagonally, with also a considerable lengthwise stretch. The result was, that when the tire was blown tight, the swelling of the sides tended to shorten the inner diameter of the tire, making it cling tight to the rim. Without this principle, it is probable that the single tube would not have been a success. In a horse drawn vehicle, whose wheels need only to support a weight, with neither driving strains nor a tendency to creep, it is not necessary to build the tires with the threads

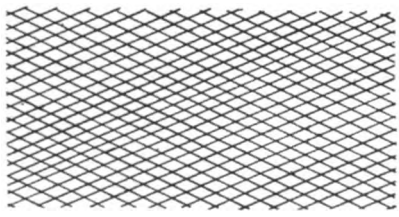

Tire Fabric—Constrictive Weave

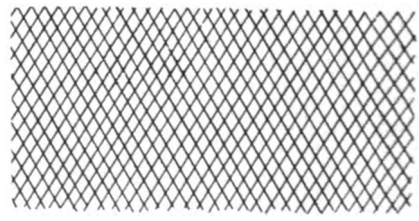

Tire Fabric—Non-Constrictive Weave

running diagonally, unless it be to prevent puckering under the bottom where the diameter is smaller. Where resilience and supporting strength alone are required, there is no need for any but the crosswise threads. This is the case on the front wheel tires of bicycles and automobiles, which only carry weight and resist side strains. The driving wheel tires, however, should have the fabric threads tangential to the rim, to stand the driving strain.

Square Woven Fabrics

The study of driving strains led to many developments in automobile tire fabrics. Originally, a heavy, square-woven canvas was employed, but even when made of the very best material it failed to give satisfaction. This was particularly so when speeds increased and the weight of the cars was augmented. The ordinary square weave, with single threads in the warp and the filler, did not answer, and this was noticeably so when the successive plies were laid straight, i. e., with the

warp running parallel with the circumference of the rim and the filler spanning the tire at right angles to the tread. When subjected to the varying stresses of service, one set of threads would be taut and the other slack, and, in consequence, there was a lack of co-operation.

This was in part overcome by cutting the material on the bias, and laying it on the tire core so that both warp and filler threads crossed it diagonally, the texture representing a series of multiple diagonals, criss-crossing so that they pointed in the direction in which the wheel revolved. As a result, all of the threads took the stresses more

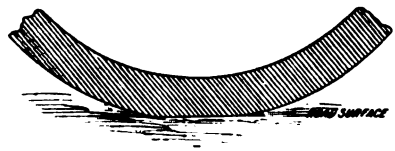

SNUG WOVEN TIRE FABRIC ON A FLAT SURFACE

CONSTRICTIVE FABRIC WITH TAUT OR STRETCHED TREAD RUNNING OVER A PEBBLE

NON-CONSTRICTIVE FABRIC

[The tread yields and stretches and absorbs the pebble without straining the fabric or jolting the vehicle]

nearly in line with their lengths, and offered a longer bearing surface. Also, they spanned a bigger arc, and were supported by a larger underlying volume of air within the inner tube. This meant a wider distribution of the blow or a bigger area of contact in surmounting a stone, or any other road inequality, and reduced to just that extent the chance of a bruise or rupture.

As a matter of fact, cotton thread is not inherently elastic, and it is quite apparent that a suitable tire fabric should possess this characteristic. Army duck or square-woven canvas is devoid of this desideratum; in truth, stiffness rather than elasticity is what is commonly found

in sailcloth. How, then, have the makers of tire fabrics secured strength, in the first place, out of a weak filament, and then so combined the threads that the carcass might better perform its part and approach closer to the ideal requirements for an envelope that should "bend or suffer distortion of its normal circular shape without friction or resistance other than the contained air-pressure?" The automobile tire does not perfectly meet this ideal standard, but it is a good approximate, thanks to the ingenuity of the fabric builders.

"Crimp"

The desired degree of elasticity is imparted by a process of weaving, the threads being subjected to tension that gives to the warp and filler threads a wavy form. This is technically called "crimp." In short, the thread is virtually thus converted into a spring. It is this crimping that does the trick and provides the necessary measure of elasticity. In weaving this type of tire fabric the warp threads are given about 6 per cent. more crimp than those in the filler, the purpose of this being to offset one of the consequences of calendering. As the fabric passes between the rolls, some of the crimp in the warp is always ironed out. To balance this, additional crimp is put in the warp threads at the time of weaving, and when the frictioned fabric issues from the calender the crimp of both the warp and the filler is alike.

It should be noted just here that the carcass is built, not of one type of fabric, but of several.

Speaking of the elastic limit of yarn, W. L. Lyall* says: "There is no elasticity in a cotton fiber. We made a specialty some years ago of a camel's hair press cloth for hydraulic presses, for cotton-seed and linseed oil mills. Sea Island cotton did not stand up because it had no elasticity. What we did find satisfactory was camel's hair yarn woven into the fabric. The hair fiber has an elasticity which cotton lacks entirely.

"The only way to get anything approaching a stretch in cotton fabric is by the crimps. There is a certain slip before the fibers part entirely, that is all. A cotton thread made of Sea Island consists of a number of fibers that will average one and five-eighths inches in length; ribbon-like flattened tubes that have convolutions in them to enable them to grip each other, and that is all that gives strength to the threads, the twist tending to increase the grip of the different fibers to one another. That is helped by the humidity. We could not card cotton on a March day unless we had artificial humidification in our card room. The fiber would fly off the card surface."

*S. A. E. Bulletin, November, 1914.

Kinds of Standard Tire Fabric

In his excellent essay on automobile tire fabrics in The India Rubber World, Alvin Kingsbacker wrote in part as follows: "The term 'automobile tire fabric' is generic. As used to-day it includes many kinds of fabric which are used in the construction of a tire, but the most important of these and the one that is used in greatest quantity is the 'building fabric.' It is estimated that of this style alone about sixty million square yards are used annually. In addition to this building fabric there are various other fabrics that go into the making of a tire. These sundry fabrics include special construction, known as 'chafing fabric,' 'breaker fabric' and others, such as 'Osnaburgs,' 'sheetings' and 'tapes.' The last two are used more especially in the process of tire manufacture and are not an inherent part of the tire itself. Then there is another fabric called 'thread' fabric that is frequently used in making certain types of beads."

Building Fabric

The "building fabric," as previously mentioned, is the body of the tire. It is the most important fabric and as such must possess above all, strength, flexibility and elasticity. The fabric is a plain

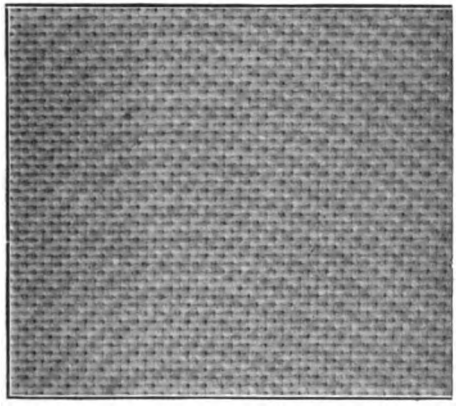

Building Fabric

weave, and weighs approximately 17.25 ounces to the square yard. The yarns from which this building fabric is made are 11/22.5 or 11/23. The twist in the single yarn is from 14 to 16 and the ply yarn is 4 to 5 turns per inch. The texture is 23 ends and 23 picks per inch. The gage of thickness of the fabric is .040 inch. The water content should not be over 5 per cent. The take-up is found to be about 14 per cent.

and the contraction of filling about 10 per cent., leaving normally a difference of 4 per cent. in the amount of warp and filling yarn stretch. This is an important point in the construction of tire fabric. It is obvious that if the difference is too great, the filling, when the fabric is subjected to a strain, will arrive at its straight length before the warp and consequently will weaken or break before the straight length of the warp is reached. When the percentage of crimp or bend in the warp and filling are about equal, or within 5 per cent. of each other, the warp and filling will tend to reinforce each other. So-called tire fabrics analyzed were found to have 32 per cent. take-up in the warp and 7 per cent. stretch in the filling. Although otherwise perfect, the difference of 25 per cent. made them totally unfit for use in tires.

Building fabric is used in various grades, but the construction remains the same. Sakellaridis, or cotton grown in Egypt from Sea Island seeds, is a material that has become very prominent. The staple is longer and stronger than Sea Island, but it is not quite so elastic. In color it is a yellowish white, a compromise between Sea Island and Egyptian. Long-staple Sea Island, Combed Egyptian and Carded Egyptian are also used in great quantity, together with some carded Peeler yarns, chief and most important of which is Sea Island.

Strength obviously is the paramount feature in a tire fabric and upon this factor there cannot be put too much emphasis. Every tire manufacturer, even though he has no fabric inspection department, has at least a tensile strength testing machine. There are various ways of testing, and each method results in a different standard of strength. For example, breaking a 3-inch strip in a 2-inch jaw is virtually testing two inches of fabric, but will yield a higher strength test than if just two inches are tested. This is because the two inches in the former case are reinforced by the threads adjacent, although not held in the jaws of the machine. The standard of strengths, as stated below, is based on a different method of testing and yields a lower but truer breaking strength. A piece of fabric is unraveled down to one inch, representing in number of threads the exact texture of that inch. This strip of fabric is placed in the jaws and tested for strength, and can indicate no greater strength than the exact number of threads that inch actually possesses. According to this method of testing the following standard for strength in building fabric is obtained:

	Warp	Filling
Sakellaridis .....pounds	340	360
Sea Island	319	320
Combed Egyptian	275	285
Carded Egyptian	260	270

A question may arise as to the cause of the difference in warp and filling strength. When it is remembered that the warp is woven under considerable tension, this difference in strength is readily understood.

Breaker Fabric

The breaker fabric is applied as a single layer on the tire just beneath the tread and its purpose is to protect the building fabric and to distribute the shock that the tire necessarily receives on the road over as great a surface as possible. It also serves to bind the carcass and the tread intimately together; or, to put it popularly, to rivet them. The

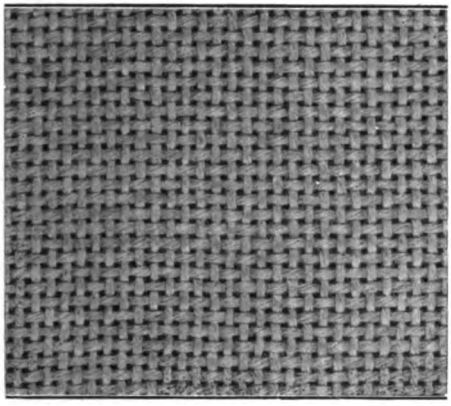

Breaker Fabric, Square Weave

fabric has to be strong and capable of standing up under the sidewise and lengthwise stresses, and must effectually support the tread.

There are many and varied constructions of breaker fabric, each manufacturer having his own particular weave and construction. The average breaker fabric, if such there be, is somewhat similar in construction to the building fabric in respect to the yarns. The texture is very much lower in order to permit large openings in the fabric to accommodate more rubber than the other fabrics. The weight varies with the construction from 11 to 13 ounces, but usually is somewhere around 10 ounces to the square yard. Twelve ends and thirteen picks per inch give the necessary openness to the fabric. The weave will vary anywhere from a plain weave to a mock leno. It is made of Sea Island, Combed Egyptian or Carded Egyptian cotton and heavily coated with high-grade rubber.

In the older style of breaker strip material, the square weave, with the open mesh, did not give the fabric stability or stiffness. It was

so yielding that it could not be run evenly through the calender, and it was hard to apply the rubber coating uniformly and satisfactorily. Because of this a modification was necessary, and the present improvement, called the "leno" weave, is now extensively employed. In this fabric the warp and the filler yarns are locked so that the material resists the spreading effect of the calender rolls without distortion. There is a single heavy warp yarn running in one direction with two smaller fillers that cross above and below the large warp yarn in a way to lock or steady it.

In using "leno" or other weaves which, by crossing the threads, yield a stronger fabric, the objection arises from the cutting action of the threads. The effect of tire service on a fabric is so peculiar that it would not be long before the threads would cut each other in

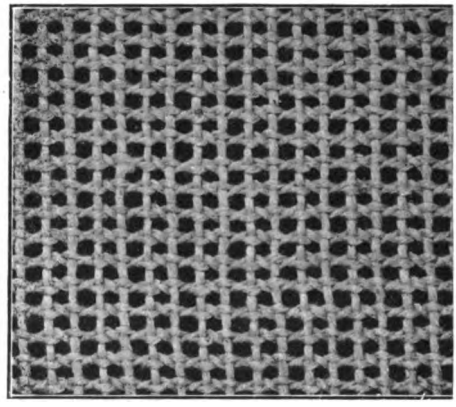

BREAKER FABRIC, LENO WEAVE

the places where they cross. It is difficult to set a strength standard for this fabric, as any change in texture, weave or yarns will greatly modify any standard which may be placed upon it. However, with a construction such as is outlined above the breaking strength would be as follows:

	Warp	Filling
Sea Island .....pounds	160	180
Combed Egyptian	140	155
Carded Egyptian	115	130

CHAFING FABRIC

The chafing fabric is used to cover the beads and the lower side walls of the tire where more flexibility is required, and is of

necessity a lighter fabric. The name is self-explanatory. The weave is square, the weight varying according to the size of the tire, and the threads are crimped. In some it is an 8½ ounce fabric, in others 9⅛ ounces, etc.

In a chafing fabric weighing 9 ounces to the square yard, the yarns are 4/22.5 or 4/23. The gage or thickness is .022. There are

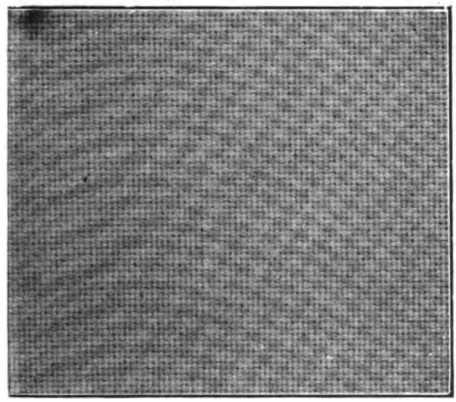

CHAFING FABPIC

34 ends and 34 picks to the inch. It is made of Sea Island or Combed Egyptian and the breaking strengths are as follows:

	Warp	Filling
Sea Island .....pounds	155	170
Combed Egyptian	125	140

Clincher beads are built up on a rubber core; or, in the case of a quick detachable clincher or straight side tire, on a wire, braided wire or cable core, and covered with fabric. The bead is then given its proper shape by molding. The fabrics used in the beads are not standardized. However, 8 to 14-ounce fabric is recommended by many builders of reliable tires.

THREAD FABRICS FOR BEADS

In addition to the regular bead fabric, what is known as thread fabric is used for tire beads. The base of this fabric is a single yarn that is twisted two-ply and reversed, and then twisted three-ply. Such fabrics used are loosely woven materials consisting primarily of single heavy warp cords held in place by widely spaced thin threads, the sole duty of which is to hold the warp in place. This fabric is

calendered without regard to the fact that the threads may ride one another. The elasticity of thread fabric is increased by cabling, which means twisting with other threads, and crimping.

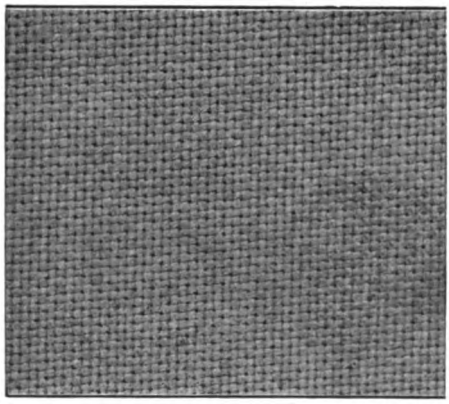

BEAD FABRIC

When thread fabrics are used for building up the carcass, which is rarely, they are proofed on a spreading machine and then cut on the bias and rolled up with liners ready for the building machine.

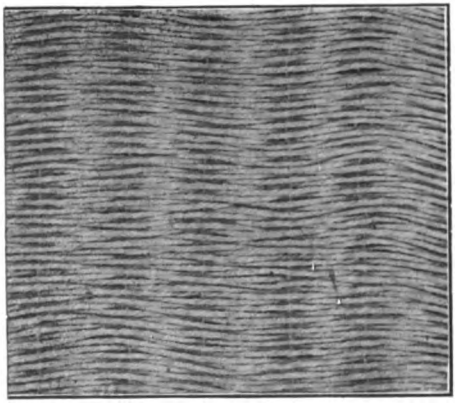

BEAD THREAD FABRIC

The other fabrics, Osnaburgs, sheetings and tapes, need no particular mention, as they are standardized fabrics and differ in no respect from the fabrics that are on the market today for use in the manufacture of a variety of rubber goods.

Spinning, Weaving and Finishing

The spinning of the yarns is, of course, an important step in the work, and it follows that unless the maximum strength of the cotton is secured here the succeeding process of manufacture cannot yield a suitable tire fabric. The twisting of the single yarn into ply yarn is not such a simple problem as it appears. When all single threads are twisted into one there is always a possibility of one or more threads breaking and the twisted yarn continuing in its whirly course with a fewer number of component threads than the requirements demand. This feature is known as "dropped ends" and is a serious weakness when found in the fabric. It is absolutely essential that every piece of yarn should have its required number of component threads through its entire length; and to twist it with this unfailing accuracy involves the human element more than the mechanical, as the result depends largely upon the skill and alertness of the operatives. Throughout the entire handling of the yarns, warp and fabric, there must be avoided any contact with oil, dirt or grease. Rubber will not adhere to an oily or greasy fabric and the tire manufacturer is very particular in regard to the cleanliness of the fabric which he buys. The mill runs its looms on all grades of yarn separately. A weaver may be running one loom on Sea Island and another on Egyptian and may inadvertently mix the bobbins, weaving into a Sea Island fabric one or more bobbins of Egyptian yarn. Such a fabric is said to have "mixed filling" and is generally rejected by the fastidious fabric buyer. It is important that there be no broken or knotted threads. When a filling thread breaks, the pick is pulled out entirely and the loom started with a new pick in its proper shed. In the case of a warp thread the yarn is spliced; that is, two or three component threads are knotted at a time in different places so that the binding of the broken yarn does not make a bulky knot. There must be no holes in the fabric and everything about it must be even and uniform. After the weaving comes the mending, burling, mill inspection, finishing and packing. The fabric is rolled and wrapped with paper and burlap for shipping.

H. V. R. Scheel[1] in a historical sketch of tire fabrics sums up excellently the fine points in their weaving:

It may be stated in a general way that the item "strength" includes all others, that is, strength in the tire, because if the properly uniform tensions of thread to thread in the plied yarn, or plied yarn to plied yarn in the warp, or in the filling, or of the warp threads as a whole to the filling threads as a whole (relative crimp), are not

[1] Tire Fabrics, by H. V. R. Scheel, S. A. E. Bulletin, November, 1914.

present, then full strength is lacking. Also, if the widths vary unduly, then at certain places there are more warp threads to the inch than at other places, which tends toward unevenness and lack of strength. The leading tire fabric manufacturers feel that the place to make the fabric is in the loom, by the actual weaving together of the warp threads and filling threads in proper relation. Tire manufacturers should not be misled by the equally good appearance of fabric made with the aid of the steam jet and the heated roll on the calender.

In any fabric there is one combination of the following elements which brings the best results, all things considered, viz.: Number of warp threads per inch, number of filling threads per inch, each of proper size and twist, these to make a fabric of the proper degree of openness for the frictioning rubber; and the relative crimps of warp and filling (the crimp being the amount of take-up or shortening due to the interlacing of the warp and filling threads with each other) such that the so-called "off-square" will be just enough to be entirely taken out by the operation of drying, frictioning, and rolling on the calenders in the rubber plant, this with the idea that the frictioned fabric when cut into bias strips ready to be built up into a tire will contain the warp and filling threads with equal crimps. A proper combination of elements in this specified manner will result in a fabric of a certain weight per square yard with normal humidity condition.

Building fabric is so designed that the rubber is pressed into the interstices between the warp and filling threads and forms a lock between the layers. Accordingly it may be considered that the porous fabric lies enmeshed in a sheet of rubber-and-fabric. To think of a layer of fabric with frictioned rubber spread on its top and bottom surfaces is inaccurate. Of course, fabric could be more closely woven, but it would not serve tire fabric purposes as well.

After being woven the fabric is very carefully examined in order that immediate correction can be made for any weaving or other faults which begin to make their appearance, and to trim up and make repair of such inequalities as exist in the roll. Then the roll is sent through a calender to be brushed and smoothly rolled into the shape in which it is shipped. It is felt that the cloth should not be ironed for the sake of appearance, or steamed and heated for the purpose of setting the crimps in the warp and filling, or for any other purpose.

In the meantime certain inventors are at work trying to produce a rubber compound that is resilient and yet without stretch that will do away with the fabric in tires. We strive to give the same effect by weaving the goods especially in such a way that there

is a certain "off-square" between the warp and filling. With the somewhat open weave used in tire fabric the crimp in the warp will vary from about 12 to 15 per cent. The crimp in the filling will vary from about 7 to 10 per cent.

We had been aware of this desirable quality of square goods for a number of years, having had it brought to our attention very forcefully by the troubles of two of our customers who had neglected to consider it. They were using thirteen ounce, the first of the heavier weaves for automobile tires. To take care of a sudden great influx of business, they were running the calenders every day twenty-four hours.

They could not get new calenders and naturally thought they would speed them up, which they did. This put greater tension on the fabric, so that goods going on to the drying cylinders, 42 inches in width in one calender room were reduced in width to 39. That increased the crimp in the filling something like 7 per cent. The superintendent of the mill told me as a joke that he was making money out of our goods; we only sent him hundred yard rolls and he was getting about 108 yards out of them. But the truth was he was taking nearly all the crimp out of the warp and putting more into the filling. Although the construction of the fabric was 22 by 22, we found that in the tire the filler threads had been reduced to 17 per inch and the warp threads increased to 24 per inch, notwithstanding which all the breaks were in the warp, the reason being that there was practically no stretch left in the warp (it was all in the filling).

TIRE FABRIC LOOMS

For weaving the various sorts of fabric employed in building tires several different looms have been devised, some for square woven duck in wide sheets, others for bias fabrics, and a few for making fabric strips, one a formed strip to fit the tire building core. Of these the best known are the following:

Crompton & Knowles Automatic Loom

The prominence that pneumatic tires have given to certain fabrics has resulted in many improvements in the looms on which building fabrics are woven. The question of increased production has been fully considered in the design and construction of the loom shown in the following illustration.

It is generally equipped with automatic shuttle changers so that changing by hand is eliminated. The magazine carries six or seven shuttles filled with weft, and when the yarn on a bobbin is exhausted

the shuttle is automatically thrown out and a new one substituted so that the loom continues to run without stopping as is necessary with the older types of looms.

There are various claims as to the percentage of production, but, broadly speaking, the average on each loom is from 80 to 90 per cent of a theoretical production of 100 per cent. Moreover, the automatic loom is said to give better production and the cloth is woven more perfectly. This loom, therefore, is a decided improvement over the older type, where the filling or weft is changed by hand. Ordinarily, with the automatic loom, the amount of waste is less, referring particularly to the amount of yarn left on the bobbins, because the automatic feeler can be set so that a very small amount is left. As the yarn

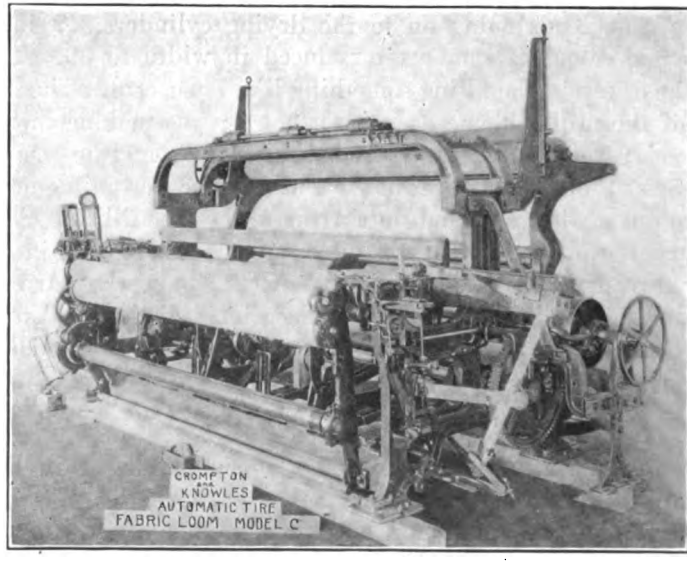

CROMPTON & KNOWLES TIRE FABRIC LOOM

used in tire fabrics is very expensive, the question of waste is a very essential matter to guard against.

The looms are made in various widths from 48 to 90 inches. As there has been some demand for long lengths of fabric, the looms are equipped with an attachment so that a roll of cloth 125,250 and even 500 yards can be rolled up in the loom as woven.

The looms are particularly heavy and in a way similar to the duck loom, the widest weighing approximately three tons. The speed is usually from 128 to 100 picks a minute, according to the width; the wider the loom the slower the speed.

PARKS & WOOLSON MACHINE FOR TRADE-MARKING FABRICS

The Kaumagraph machine used by manufacturers of tire fabrics takes the cloth from the roll or loose fold, trade-marks it, measures it and delivers the goods in the roll. Moreover, the fabric can be inspected at the same time.

The trade-marking attachment is mounted above at the right hand end of the machine and stamps on the upper surface of the cloth, so that the impressions may be inspected immediately after being struck and without stopping the cloth.

The machine is fitted with a hand wheel and screw to adjust the attachment for different widths of goods. The cloth will, therefore,

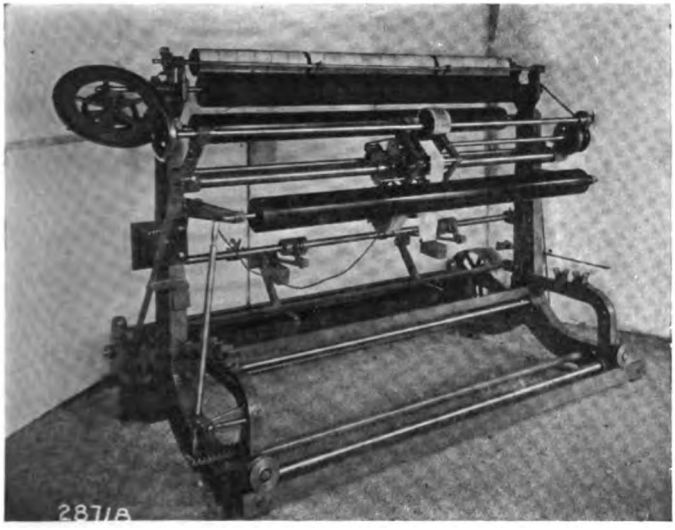

PARKS & WOOLSON TRADE-MARKING MACHINE

always run in the center of the machine. The adjustment is so quick that various widths of pieces may follow each other without inconvenience. The trade-marks may be spaced at any distance apart and convenient means are provided to place a trade-mark close up to the ends of each piece.

The double drum rolling mechanism at the back of the machine has guide stands with quick adjustments to take any gudgeoned roller within the machine's capacity. The cloth may be threaded direct from the stamping table to the roll, or may first pass under both drums, around and outside of the outer drum to the roller. The latter threading gives the stronger drive and a harder roll. Those who

market their fabrics wound in the open width on any kind of a roll or tube, can adapt this as a final packaging machine.

Doughty Fabric Strip Loom

In this machinery assemblage the loom and the calender are made parts of a virtually continuous process of tire building. The fabric is woven in bands the exact width required for the tire carcass so that no cutting is required. While the fabric is practically of plain weave with the warp threads running longitudinally, and the woof,

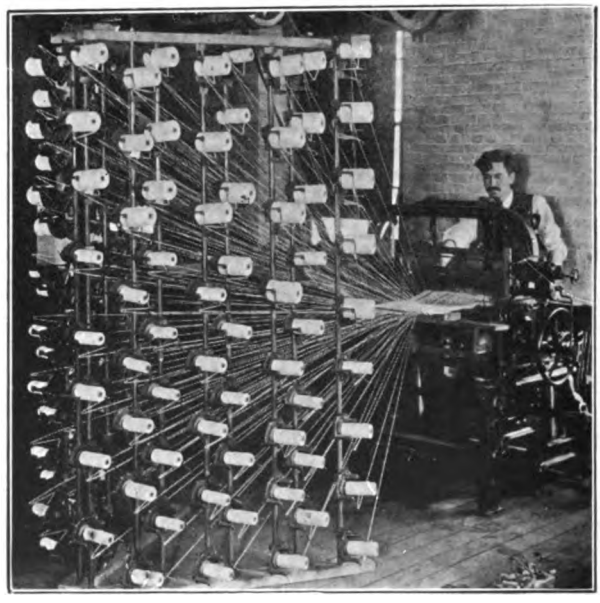

Doughty Fabric Strip Loom

or filling threads crosswise, it is so arranged that the strip comes from the loom shaped as it will be when made up into a tire. The special weave of this fabric, while being equally resilient, is claimed to do away almost entirely with the grinding wear of the bias-woven fabric. From the loom the strip of fabric is passed through a calender, the rolls of which are shaped to it, where it is frictioned. Directly from the calender it is wound hot upon the tire core.

Lake Fabric Band Machine

Fabric bands for the outer covers of pneumatic tires, of the kind which are woven curved both transversely and longitudinally to fit the

tire mandrel, are woven in such a manner that, while the fabric is in the loom, the transverse curvature is much slighter than usual, and the longitudinal curvature is proportionately increased, the ratio of the radii of curvature being the reciprocal of the ratio of the corresponding radii of curvature of the tire mandrel, so that when the fabric is removed from the loom, it fits the tire mandrel without distortion. The warps are let off from equally braked spools, and the fabric is drawn over a roller which is only slightly curved in the direction of its axis and is of small diameter. The side strips for making the tire beadings, are so woven that the warp threads are of equal length, or the length of the warps may be caused to increase

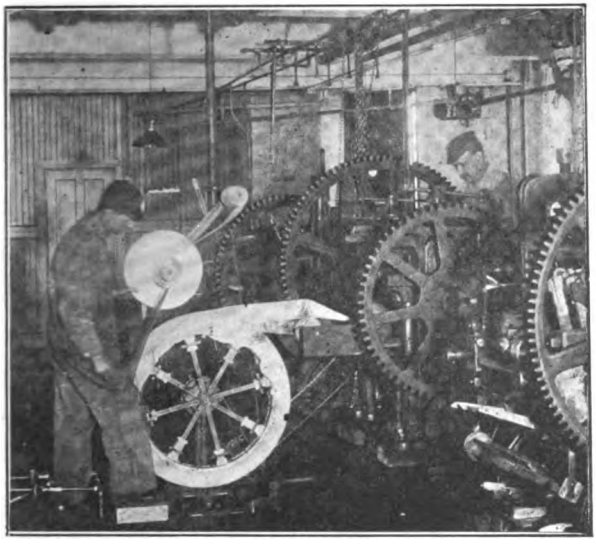

TIRE BUILDING WITH THE DOUGHTY FABRIC STRIP

towards the edges by using a delivery roller with projections. Two or more widths may be woven together and wound without separating them. The fabric is guided, and drawing in of the selvage is prevented, by causing the wefts to pass round wires which are provided with tension springs and of which the free ends rest on the roller.

TUBULAR FABRIC MACHINES

DE LASKI CIRCULAR LOOM

The De Laski circular loom is adapted for weaving pneumatic tire fabrics in tubular form with any desired degree of curvature. The base plate *A* of the machine is 4 feet 7 inches in diameter, the

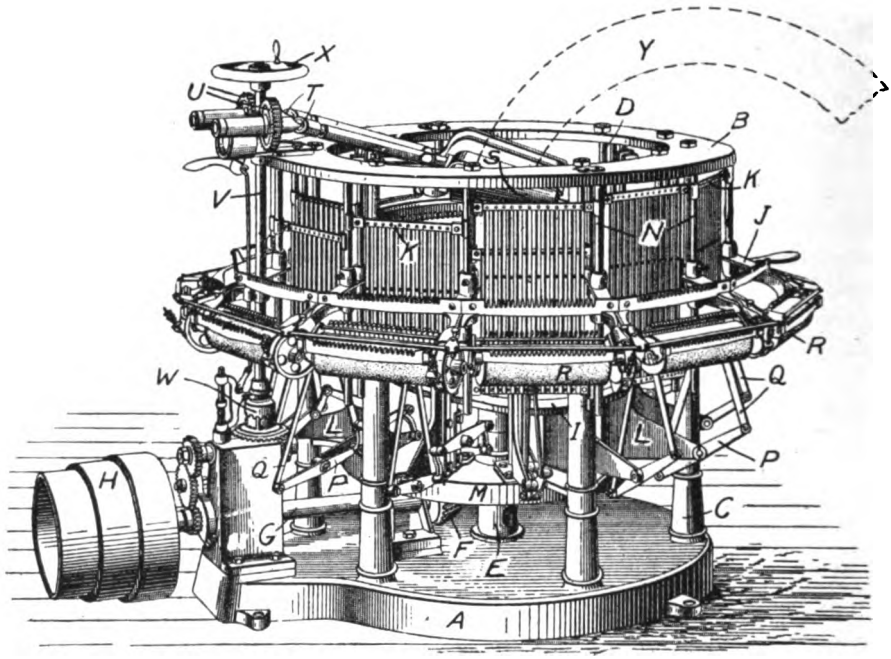

DE LASKI CIRCULAR LOOM

top ring plate *B* being a little more than 3 feet from the floor. The six pillars *C* secured to the bed plate support a skeleton table, the periphery of which is in the shape of a twelve sided polygon. Attached to this table are twelve posts *D* which support the top ring *B*. In the center of the base is a stationary, vertical tube *E*, which extends upward through the center of the machine into the hub of the skeleton table. This tube is open at both ends for passing the core to be covered from the room below the floor on which the machine stands, up through the machine for weaving the fabric around it. Surrounding this tube is a sleeve which is rotated through a bevel gear *F* from the driving shaft *G* rotated by the belt pulley *H*. The sleeve carries the cam wheel *I* for operating the heddles and also a large gear for operating the shuttles. The weaving takes place either around the article to be covered or around a core at a point above the tube *E*. The machine illustrated is arranged for weaving curved, tubular tire fabrics. In order to form the woven tube with the curvature of the tire, a special form of core is employed. It is provided with a means for adjustment transverse to the axis of the central thimble, thereby increasing the space between the core and the thimble on one side and

correspondingly decreasing the space on the opposite side. This causes the weaving to be more compact on one side of the tube than on the other, thus giving the tire the natural curve required. The shuttles, two in number, travel in circular paths along a race-way between guides. A special form of spreader is employed for opening the threads of the shed near the point where the threads are last crossed, to produce sufficient strain on the threads to cause them to tightly embrace the previously laid weft-thread while a subsequent weft-thread is being laid into the angle between the parts of the shed. By varying the angle of the spreader where the weaving is taking place an equal strain may be placed on both parts of the shed or a greater strain on the upper part, or vice versa, thereby making the fabric of the same hardness or looser on its outer and inner surface as required.

The loom shown is arranged for forming twelve sheds of warp, the heddles for each shed being operated consecutively. Secured to the posts *D* are twelve brackets *J* which support vertical guide rods *N* on which the heddle bars *K* slide. The heddle bars are simultaneously reciprocated in opposite directions by means of the cam wheel *I*. The rim of the cam wheel engages a sliding block which moves vertically in brackets *L* secured to the plate *M*. Each of the sliding blocks is connected with a system of levers in such a manner that when the block is lowered by means of the cam wheel, the outer ends of the levers *P* are raised while the inner ends are lowered. This movement, and by means of the connecting rod *Q* attached to the outer and inner heddle bars, causes the heddles to be reciprocated simultaneously in opposite directions, thus opening up the upper and lower threads for the shuttle to pass between. The warp thread is passed to the machine from any outside source, such as through openings in the floor from the room below, and is passed around rollers *R* covered with sandpaper to provide friction and to keep the thread from slipping. As the tube of woven fabric emerges from the machine it is passed between a pair of conical rollers *S* driven through universal joints *T* and gears *U* from a worm on the vertical shaft *V*. At the lower end of this shaft is a clutch *W* which may be disengaged for the purpose of turning the rollers *S* by the hand wheel *X*. This feature is important in weaving tire covers where it is desirable to leave a length of unwoven warp threads at certain intervals for cutting the tires apart and leaving sufficient warp for fastening the ends of the tire together. This is accomplished by stopping the weaving at the proper point, disengaging the clutch and turning the rollers by the hand wheel. Weaving may be continued until any number of tires are woven, after which they

may be cut apart and the unwoven warp fastened together. The dotted lines at *Y* indicate the shape which the tubular fabric assumes when weaving an automobile tire.

Subers Tire Casing Machine

With this machine annular and tubular tire fabrics previously impregnated with rubber solution are made on an endless mandrel, which corresponds in cross-section with the finished casing. Later patents provide for a ribbon of metal inserted in a tubular band, saturated with rubber solution, and made, on a special machine, into a tubular or sheet fabric of single thickness with raw edges, or one of double thickness with selvage edges, for tires, hose or belting.

The illustration refers to one of the former patents covering a machine for making annular tubular fabric on a curved mandrel. The three standards *A* support the frame of the machine and an endless

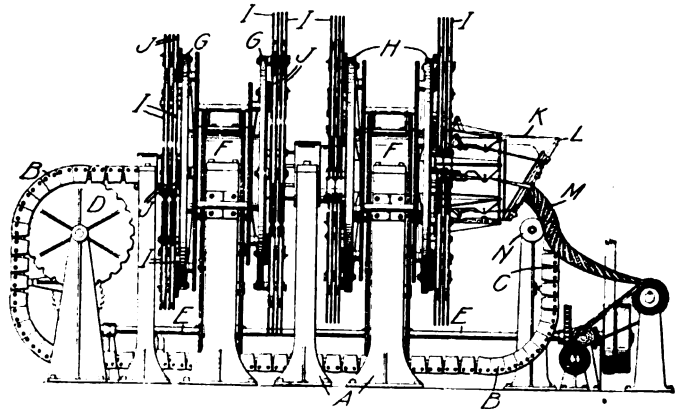

Subers Tire Casing Machine

mandrel *B* that travels on a T-rail *C* driven by sprocket wheel *D* from the main shaft *E*. The bearings *F* support the four reels *G* and *H* and the spools *I*, on which the adhesive fabric bands are wound alternately, with non-adhesive strips from the spools *J*. The fabric bands *K* mounted on the revolving reels are guided to the right hand side of the machine, where rollers *L* guide the strips over the slowly moving mandrel forming the tube *M*, which is slit on its inner surface by the circular knife *N*.

De Leeuw Circular Braider

This machine makes tire casings in tubular form with closer mesh at one side than at the other, and is particularly adapted for spring wire braiding.

Dickinson Tubular Fabric Loom

A tubular endless fabric, composed of single or multiple interwoven plies, is woven on this loom without stretching, pulling, packing or otherwise distorting the weave.

Subers Fabric Strip Machine

Cotton yarn is interwound and laminated upon a mandrel by this machine, forming a tube that is afterward impregnated with rubber, collapsed in band form, and then dried and wound up on a reel. These strips are used for building tire fabric, making rubber hose, belting and other rubber products.

The drawing is a side elevation of the machine. The four reels, *A*, *B*, *C* and *D*, rotate one within the other, the alternate reels revolving in opposite directions, and are supported by the standard *E*. Upon

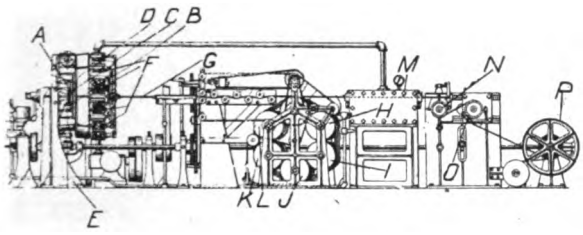

Subers Fabric Strip Machine

each reel is mounted a number of spools *F*, containing the yarn elements which are inter-wound around a centrally located hollow mandrel by the rotation of the reels.

The band passes over the mandrel through the solution chamber, and is shown at *G*, being fed to the drying roller *H*, and drums *I*, *J*, *K* and *L*. After passing over the drying rolls the band is carried through the chamber *M*, in which the solvents are recovered, and then led through stretching rollers *N*, *O*, and finally wound up on the reel *P*.

In a more recent patent Subers provides a machine that impregnates the strands of yarn separately, prior to forming them on a mandrel, into a hollow band, and at a relatively larger angle than heretofore employed.

Subers Fabric Band Covering Machine

A tubular flattened fabric band is made by inter-winding the individual strands previously impregnated with rubber on a mandrel at the same time that bands of unvulcanized rubber are interposed

between the series. The fabric band is finally removed from the mandrel and flattened to form a band with selvage edges.

Dunkerley-Arnold Braiding Machine

This vertical braiding machine lays tire carcasses in annular form, a braiding mechanism of ordinary construction revolving horizontally around the tire core, the latter being revolved vertically between guide rollers. When a layer of the fabric is braided entirely around the core, it is covered with a thin layer of rubber compound and a second layer of fabric is braided onto it. This is repeated until the carcass is of the desired thickness, when it is slit along the inner circumference and the edges bound to prevent unraveling or turned back to form the bead. This serves as the body of the tire upon which the tread may be built in the usual way.

ANNULAR CORD FABRIC TIRE CARCASS MACHINES

Fisher Fabric Braiding Machine

Tire building fabric is made by braiding the fabric upon a series of annular cores of the size and shape of the tire casing. The bands thus formed are cut circumferentially and used for building the casings of pneumatic tires.

The illustration shows a series of collapsible cores placed one upon the other and around which the fabric is formed by any preferred form

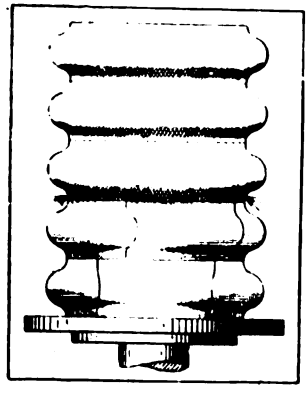

Fisher Fabric Braider

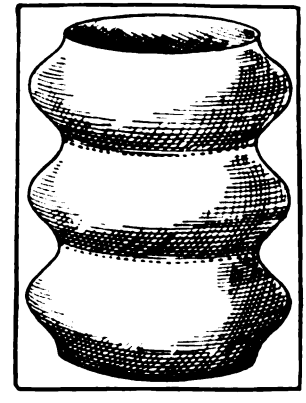

Langer Tire Fabric

of braiding mechanism. The forms may be either moved upward or downward during the braiding operation. When they are moved upward those on which the fabric has been braided are removed from the

top and others added at the bottom, thereby permitting a continuous operation of the machine. The yarn may be impregnated with or laid in rubber during the braiding process.

Langer Tire Fabric Loom

Inventive effort to eliminate friction between the plies of fabric used in ordinary pneumatic tire construction is being directed toward reducing the number of fabric plies in the carcass; moreover, it has been found impractical to wind heavy fabric on a core.

A specially woven fabric that may be used in one or two ply fabric construction, and the loom on which it is made, are shown in the accompanying illustrations. The fabric is woven in continuous

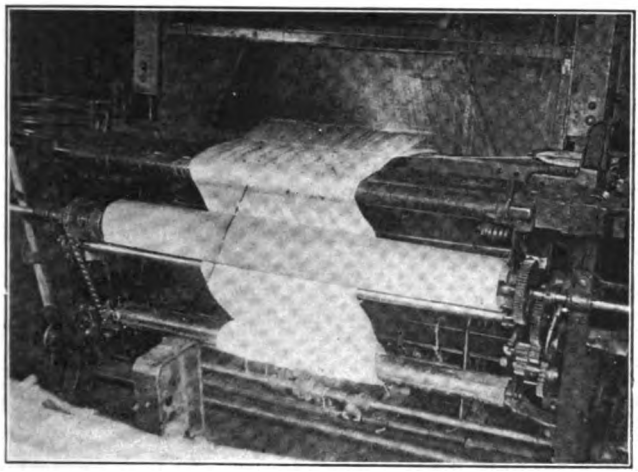

Langer Tire Fabric Loom

tubular forms, each possessing the correct shape and diametrical measurement of the intended tire carcass. These sections are cut off, impregnated or frictioned with the rubber and made up on a collapsible core in the usual way.

The loom is of regular construction with the exception of the fan-shaped reed which is automatically raised and lowered during the weaving operation. When the wide part of the reed beats in the weft the fabric is correspondingly wide and when the narrow part is in position to beat in the weft the product is narrow, thus forming the corrugated contour of the tubular fabric.

CHAPTER X

PNEUMATIC TIRE FABRICS—(Continued)

Testing Tire Fabrics

THE fabric, being a plain weave and of heavy construction, appears to most persons to be a very simple one, but this idea is abandoned when the number and diversity of tests which the fabric must undergo is known.

Guarding Against Irregularities

Briefly, the tests applied in one of the largest American tire factories are as follows: First, the threads per inch are counted, the width is measured, the column bow measured (which shows how near the warp and filling threads are at right angles to each other), the selvage noted to see if it is slack enough, broken threads, weak threads, holes and oil spots are watched for, and the uniformity of weaving is criticized. Then the total length and weight of the fabric is checked up with the invoice, and the ounces per square yard are figured from the company's own measurements. Before the rolls are passed on into the factory, the strength, gage, twist, crimp and per cent. of moisture are ascertained.

Pieces of fabric are returned from the bias cutters and are tested all over again to see how they have been affected in the calenders. The resulting records form a library upon which specifications are based.

Two Classes of Fabric Tests

Tire fabric tests may be divided into two classes; the physical and the visual inspections.

The physical tests include tests for strength, weight, thickness, or gage, texture, take-up, contraction of filling, and water content. When these physical tests are made and found satisfactory the fabric is run over an electrically lighted inspection perch. This is the visual inspection and by its means every defect or irregularity in the construction of the fabric becomes apparent. The irregularities that are looked for are as follows:

Loop knots	Slack warp ends	Hard twist yarn
Warp knots	Pulled-in selvage	Soft twist yarn
Beat ups	Reed marks	Mixed warp or filling
Bad start ups	Drop end yarn	Mispicks or double picks
Uneven fabric	Split end yarn	Smashes
Slack filling	Oil stains	Floats

While the presence of any one of these may not of itself constitute sufficient grounds for rejection, a combination of several of them or the frequent recurrence of one of them, would place the fabric in the imperfect class and render it unfit for use in tires.

These strict specifications and requirements for tire fabric give an idea of its importance in the building of tires. However, with increased knowledge of rubber compounds and tire construction, the importance of tire fabric may be in a measure reduced. These two need not necessarily conflict, as in its present form the pneumatic tire requires all the strength, flexibility and elasticity that can possibly be brought forth in a fabric.

Standard Testing Methods

The "Tentative General Methods for Testing Cotton Fabrics" published in the year book of the American Society for Testing Materials in outline relate to the following matters: (1) Sampling a 10-inch swatch from either end. (2) Test specimens to be cut 8 inches long by 12 inches wide, raveled each side to required width,

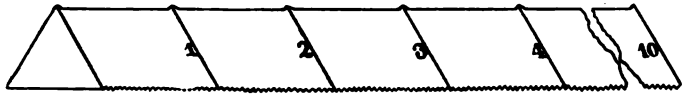

Count Scale for Testing Fabrics

using a count scale. (3) Test samples to be oven dried (221 to 230 degrees F.) to constant weight; the breaking stress to be obtained within 30 seconds from removal from oven; the length of specimen between jaws to be 3 inches, moving jaw to travel uniform rate of 12 inches per minute. (4) Elongation measured, on reference marks 3 inches apart, at instant of breakage. (5) Weight per square yard shall be based upon the dimensions of a complete roll expressed as dry weight, or standard weight. The latter is the dry weight increased by a standard moisture allowance of 8.5 per cent. (6) Moisture test samples are taken from both ends of roll while dimensions and net weight of rolls are determined quickly and accurately. (7) Samples for moisture, weighing at least 3.5 ounces, are received and weighed in air tight container (see (3) for conditions). (8) The dry weight of the roll equals the net weight of roll minus that weight multiplied by the percentage of moisture, by test, divided by 100. (9) The width of roll shall be determined as the average at five places uniformly distributed along length of roll. (10) Length of roll shall be deter-

mined by registered yardage over a measuring drum of known circumference. Uniform tension, suggested for this measurement, to be 2.5 times the weight of five running yards of the fabric.

These methods have been further amended as follows:

Definition of Moisture

Dry Condition. The dry condition of cotton material shall be understood to be absolute dryness obtained by material placed in a ventilated drying oven maintained at a temperature of 221 to 230 degrees F., and dried to constant weight as determined by two consecutive weighings not less than ten minutes apart, and showing a further loss of not more than 0.1 per cent. of the previous weighing.

Standard Condition. The standard condition of cotton material shall be understood to be the condition in which it contains 8.5 per cent. of its dry weight of moisture.

Thickness of Fabric

The thickness shall be measured by an automatic spring micrometer which presses upon at least 0.5 square inch of the fabric

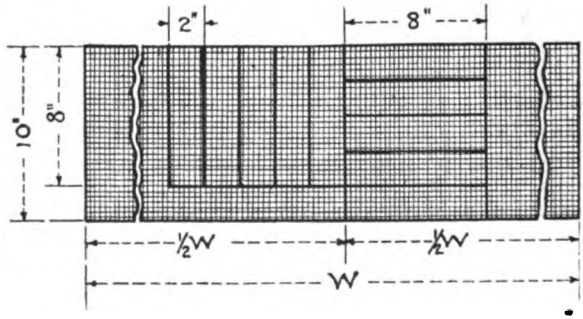

Location of Test Specimens

with a uniform constant pressure, and which is so mounted as to make measurements 6 inches from the selvage.

At least 10 measurements at different portions of the roll or piece shall be made, and the average shall be the thickness of the fabric.

Tensile Strength Tests

Strip Method of Test. The test pieces of fabric are taken as shown in the accompanying diagram and are raveled to the specified threads per inch.

Grip Method of Test. The test specimens shall be taken as follows: Starting at a line in the center, warpwise, lay off adjacent

to this line five specimens on one side, parallel to the line (warp) and five specimens on the other side perpendicular to the line (filling). The test specimens shall be cut five inches long by two inches wide. The specimens are not reduced in width by raveling, but are broken in a clamp that grips one-inch width.

Automobile Tire Fabrics

The count per inch is determined by aid of the count scale and the strength determined by the "Strip Method" in the "Dry Condition" mentioned above.

United States Bureau of Standards Methods

The methods for examining and testing fibers and textile fabrics as conducted at the Bureau of Standards, are given under the above

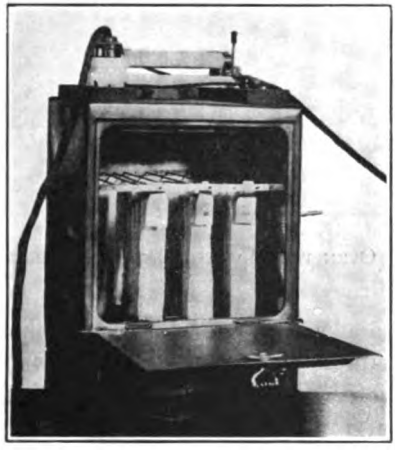

Oven for Drying Test Specimens

title in Circular of the Bureau of Standards No. 41 (third edition). from which the following abstracts are taken:

Tensile Strength and Load-Stretch Relations

Three determinations are made by tests upon single strands or upon skeins. The instruments employed in these tests are of the dead-weight type, and stress is uniformly applied by motor or by water pressure. All tests are performed under standard atmospheric conditions, the yarn or tissue being wound at least three times around a ¾-inch drum securely held at each end. The testing length between

center of drums is six inches and the pulling jaws travel at the rate of 12 inches per minute.

Dry Weight

Bone-dry weighings are made in the oven illustrated. A motor-driven fan circulates the atmosphere in the oven to insure uniformity of heat. The sample to be weighed is placed in one of the small

Oven for Making Dry Weighings

baskets carried by a chain. This chain may be turned by a wheel outside the oven, bringing each basket successively into such position that it may be transferred to a hook suspended from one end of the balance by means of another hook operated from the outside of the drying-oven.

Fabric Determinations

Some of the determinations made upon fabrics are: weight, tensile strength and load relations, percentage of fiber composition, thread count, yarn number or size, folding endurance, etc.

Folding Endurance

Some materials are subjected in actual use to considerable folding. In such cases, folding endurance tests will show to what extent they may be expected to resist deterioration from this cause.

The folding test is made upon a specially constructed machine which registers the number of alternate folds the specimen endures before breakage under a given constant tension. The determination is made in the standard atmosphere upon a test strip 15 mm.

(19/32-inch) wide and 95 mm. (3¾ inches) long. The number of double folds made before rupture occurs is reported. By a double fold is meant that the sample is folded flat upon itself, then opened and folded at the same point upon itself in the reverse direction.

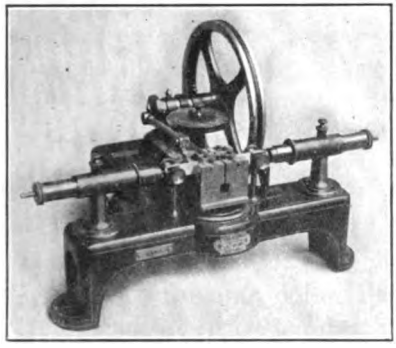

FOLDING ENDURANCE TESTER

A constant tension of 1,000 grams (35 ounces avoirdupois) is applied during the folding operation and the double folds are made at a rate of 200 per minute.

MOISTURE INCREASES TENSILE STRENGTH

The influence of the moisture content upon the tensile strength and weight of automobile tire fabrics is succinctly shown by Walter S. Lewis and C. J. Cleary in Technologic Paper No. 68 of the Bureau of Standards, which reads in part as follows:

Under changing atmospheric conditions, tire fabric may sometimes vary in moisture content from 3.5 to 8.5 per cent. Automobile tire fabric is usually sold in rolls of 100 to 500 yards each. In some instances moisture is intentionally added to the cloth when it is rolled for shipment. This moisture is sometimes added to increase the weight and strength of the fabric and sometimes to improve its appearance. Cotton tire fabric under such conditions may contain from 3.5 to 10.5 per cent. of moisture per 100 parts of dry material.

The quantity of uncombined water present in the fiber has a marked influence upon the weight and strength of the fabric; to a less degree, the width and elongation and the crimp of the yarn.

From preliminary tests upon combed Sea Island tire fabric the results have shown that for each one per cent. moisture content, upon the basis of 100 parts dry material, there is an increase in tensile

strength of approximately seven per cent. This ratio of strength to moisture content was based upon results obtained from tests upon fabrics which contained from 0 to 10 per cent. of moisture.

If dry fabric, therefore, has a tensile strength of 200 pounds per inch of width, it would test 249 pounds with 3.5 per cent. moisture, 319 pounds with 8.5 per cent., and more than 325 pounds with 10.5 per cent. moisture content. There is thus a difference of 70 pounds in tensile strength of the same fabric caused by a 5 per cent. difference in its moisture content, i. e., between 3.5 per cent. and 8.5 per cent.

A consideration of the variation in weight of fabric is also important, especially when it is bought upon the pound basis. What is known as a 17¼-ounce tire fabric, under so-called normal atmospheric conditions, will weigh approximately 16½ ounces under bone-dry conditions. Therefore, with 3.5 per cent. moisture it would weigh 17.08 ounces and with 8.5 per cent. moisture 17.90 ounces per square yard, a difference of about 5 per cent. in weight. On a roll of 500 yards a difference of 5 per cent. in weight would mean 25 pounds.

Tests of some 400 samples from 200 rolls of tire fabric from four cotton mills in both the North and the South, the fabric being produced in the ordinary way without artificial addition of moisture and shipped in box cars as usual, showed an extreme variation of moisture from 3.5 to 6.5 per cent., with an average of 4.85 per cent.

Testing Instruments and Devices

Numerous machines and devices have been invented for testing the stretch and tensile strength of woven fabrics and of yarns and individual threads or strands, also for determining the amount of twist and crimp in warp and filler threads. There are hand and motor operated machines, while others are automatic, generating their own power on the deadweight principle. Several have interchangeable clamps adapting them for both cloth and rubber. Some have indicators and pointers, while others are autographic, writing the result automatically on a standard letterhead or specially ruled paper.

Types of Testing Machines

A survey of the types of testing machines used in various countries for testing textile materials divides them into two distinct classes: (1) constant increment of load; (2) constant increment of stretch.

The constant-increment-of-load machines apply the load by uniformly increasing the tension in very small increments. There are a

few isolated cases in which the load is increased by appreciable amounts at stated intervals of time.

The constant-increment-of-stretch machines apply the load by stretching the material at a uniform rate, and because of their simplicity and rapidity of operation have found much favor with textile men both in this country and abroad.

Avery Fabric Tester

The Avery machine is not new in principle, but the mechanical design is quite an improvement upon the Goodhand and Smith machines of this type. It consists briefly of a compound lever, having at one

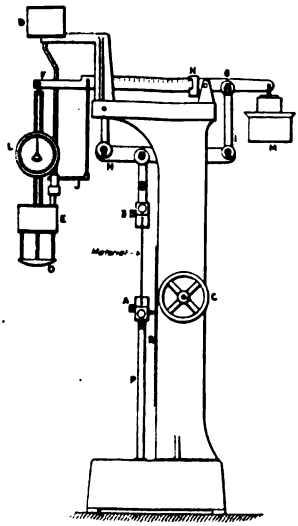

Avery Fabric-Testing Machine

end of the system a shot container so arranged as to allow of a uniform rate of inflow and at the other end a fabric clamp. The shot container is allowed to be uniformly increased in weight and the balance beam kept at zero by taking up the stretch of the sample. Provision is made to cut off the supply of shot at the time of breaking of sample. A spring balance interposed between the shot container and balance arm allows the increase of weight of the container to be quickly observed.

It has been observed that within certain limits a change in the rate of loading produces practically no change in the physical properties of the material. The Avery machine is operated in accordance with

specifications within these limits and as a result the rate of loading varies with the kind of material being tested.

The development and use of this machine show a very careful study and consideration of the tensile properties of the material to be tested. The machine is theoretically very good, but the personal equation and time of operation is so large that its practical utility is questioned.

If the constant-increment-of-stretch machine had no machine characteristics, the results of tests on this type of machine would correspond with those obtained from a constant-increment-of-load machine, provided both were operated between the limits that define the relations of stretch, load and time, within which a change in the rate of load application produces only a slight change in properties.

The constant-increment-of-stretch machines may be classified according to the method of recording the load transmitted by the fabric: (1) inclination balance; (2) elastic system (such as a spring).

Schopper Fabric Tester

The rigidity of construction, ease of operation and so-called "dead weight" feature of the inclination balance type of head—together with the fact that springs were not, in the past, constructed to give constancy of operation—has caused the first type to be used universally in this country and in Germany. The Schopper machine is of this type.

The theory and calibration of an inclination balance machine assumes a null method of weighing, that is, the balance or poise arm is at rest. This condition is entirely changed during the test by the inertia of a moving balance arm. The calibration is, therefore, not applicable to the machine as used. The error may be expressed as a function of the mass of the moving body multiplied by the acceleration. Obviously the acceleration changes with each different kind of material, shape and size of specimen, and speed of operation, and the total inertia component changes with the design and capacity of the machine. This is particularly emphasized in testing the same fabric on machines of different capacities; it is an established fact that results are different. From this it is readily seen that the results of tests of different fabrics on machines of the same capacity are influenced materially by the machine characteristics. All tests made on such machines include machine characteristics which vary with the variables of the test specimen, including nature of material, dimensions of test specimen, and rate of testing.

The use of this machine to check up deliveries is quite reasonable, for it is assumed that the machine characteristics are included in the

specifications automatically and are constant for any one fabric and any one size and type of testing machine. Specifications based on tests made on this type of machine should specify the size, type and make of machine and rate of operation, as well as the specimen dimensions.

For investigational work, however, such as the comparison of the properties of different fabrics and the determination of the effect of varying the size of sample, it is clear that the results are very misleading if they include machine characteristics. The errors introduced become infinitesimally small as the speed of the moving arm approaches zero as a limit.

The use of an elastic system for recording the load transmitted eliminates the variables introduced by the inclination balance, provided

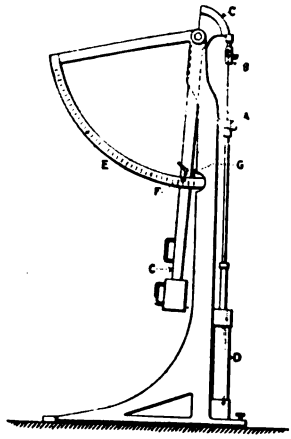

SCHOPPER FABRIC-TESTING MACHINE, INCLINATION BALANCE TYPE

the mechanical design is good, and it has the advantage of rapid and positive operation. Unfortunately, very little attention has been paid to the design of such machines and the variance introduced has caused them to be much in disfavor.

STANDARDIZATION OF TESTING MACHINES

As the situation presents itself, there are two courses open for improvement and standardization of machines for testing textile materials:

First, the standardization of existing machines, which practically means only one make, one capacity and the same dimensions of the same moving parts; otherwise there will still exist confusion of results

caused by the testing of materials on machines having different machine characteristics.

Second, the redesign of the principle of the recording head of the testing machine, so that the results obtained are independent of the machine. The second consideration is practically as easy to effect as the first, and has the advantage of being based on sound mechanics.

The requirements of a testing machine are: (1) rigidity; (2) as nearly automatic operation as is possible; (3) recording head free from objectionable characteristics caused by (a) principle, (b) mechanical design.

Bureau of Standards Testing Machine Head

The Bureau of Standards has been experimenting with a testing machine which as a whole has no value as a commercial machine, but which has shown itself to be reasonably constant and free from ma-

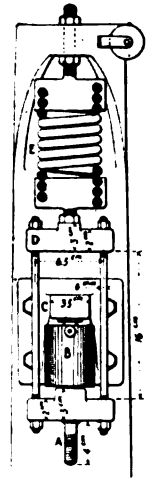

Head of Fabric-Testing Machine
Bureau of Standards

chine characteristics. It is constructed on the constant-increment-of-stretch principle and has a recording head of a suspended spiral spring and oil dash pot to take care of recoil.

From the results obtained with this machine the Bureau is redesigning the present testing machines along these lines, with the addition of a temperature correcting device and an individual test result totalizer. The construction is rigid and simple, and the operation a little quicker and as automatic as that of any existing machines.

Scott Horizontal Fabric Tester

This tester is for heavy work and has two heavy cast-iron frames holding four solid steel bars 1½ inches in diameter. Resistance to the pull on the sample is obtained by dead weight and there is a one-piece casting rigidly fastened to the frame. The main shaft rotates in two frictionless ball bearings protected by dust caps. On this shaft is affixed a large metal drum having a finished surface 4 inches in diameter to receive a chain connecting with the head clamp. Attached rigidly to each side of this drum are two finished steel bars heavily riveted at their lower ends to form one solid unit. These double cars carry the resistance weights, which are iron and made in sections for convenience in handling.

The capacity of this fabric testing machine is determined by the number of weights placed upon the levers. Two rows of graduations can be placed upon the dial, the outer row reading from 0 to any capacity desired up to 2,000 pounds. The inner row may be made to read

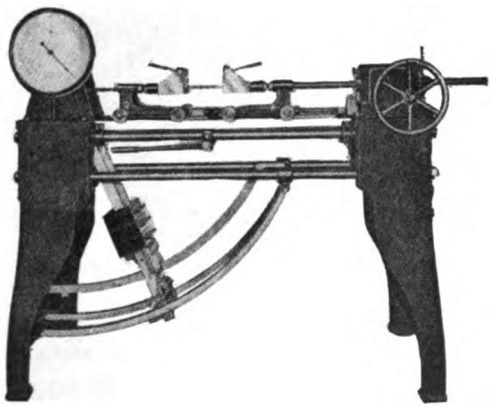

Scott Horizontal Fabric Tester

from 0 to any capacity desired so that by removing certain weights a more delicate machine is obtained for lighter materials. Thus a machine for tire fabrics may be constructed with a total capacity of 800 pounds, and by removing part of the weights a machine of 400 pounds capacity may be had for tapes, braids, etc.

Attached to the frame of the machine are two steel quadrants, the upper sides of which are provided with machine-cut teeth. On the outer sides of the weight levers are six steel pawls of varying length which engage the rack teeth and hold the weight levers and dial pointer at the exact position of the break. A third quadrant without

teeth is suspended from the frame and passes between the weight levers connecting with a long hand lever on the head end of the machine. To reset the weight lever and dial hand, it is only necessary for the operator to pull this lever.

The driving mechanism is enclosed in a heavy iron box supported on a frame. The main driving shaft extends through this box in a

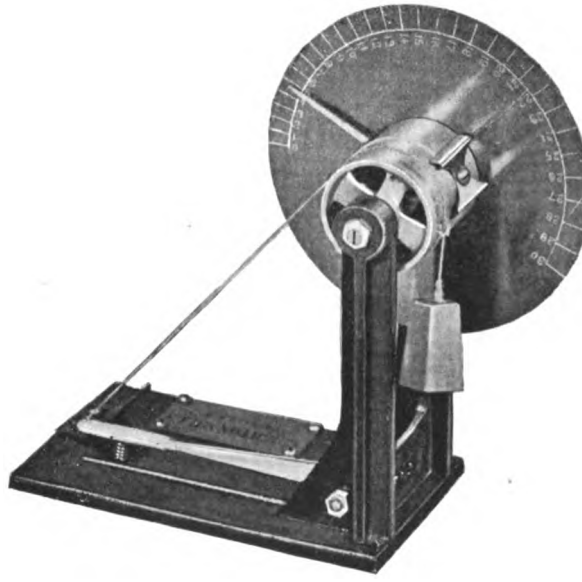

CRIMP TESTER FOR WARP AND FILLER THREADS

horizontal position and is provided at the back with a pair of 10-inch tight and loose pulleys and shipping mechanism to receive a 1½-inch flat belt. A hand-wheel, which may be removed when not in use, is fitted to the front end of this shaft for experimental and research work.

When it is desirable to drive by motor, a small gear attachment is used to replace the tight and loose pulleys, increasing the speed in a ratio of 3 to 1, thus enabling the drive to be made by a single belt direct from a one-quarter h. p. motor placed on the floor under the machine.

CRIMP TESTER FOR WARP AND FILLER THREADS

Crimping the warp and filler threads being such a necessity, in order to give a certain spring to the fabric that will to a great extent equalize the strains placed upon it, a machine has been devised

to determine the amount of crimp in the fabric threads. These can be tested before the fabric is frictioned and then again after the fabric has been frictioned and skim-coated on the calender.

The method of using the crimp tester is as follows: Mark on the fabric two parallel lines eight inches apart and cut the fabric so that the threads with the marks on them can be raveled out. Test the warp and filler threads separately. One end of the thread with the mark on it is placed exactly under the clamp on the cylinder. The cylinder is then released and the dead weight winds the thread around the cylinder until the other mark on the thread comes even with the straight edge at the bottom of the machine. The warp now presents the appearance of a straight thread and the percentage of crimp is read directly from the dial.

GADSBY-WALEN CRIMP TESTER

The determination of crimp involves making two measurements, first, in the fabric, and then after removing and straightening. The only difficulty met in making this determination is that of producing straightness without also producing elongation due to the use of tension.

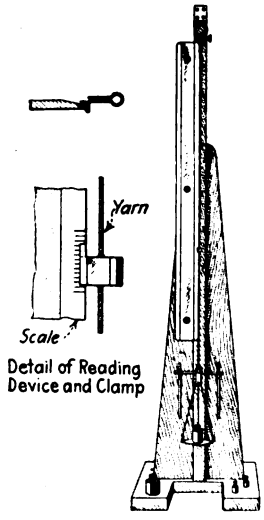

GADSBY-WALEN CRIMP TESTER

Since it seemed likely that a yarn would stretch under any tension, it was decided to make a study of its behavior under various tensions and to deduct from this the length of the yarn when straight

and under no tension. Accordingly the ingenious and unusual instrument shown on the preceding page was constructed for the purpose in view.

In using this instrument the yarn is securely clamped in a jaw at one end and a weight pan is suspended from the other end. A crossbar attached to the scale pan and resting against guides prevents the untwisting of the yarn. The small amount of friction between crossbar and guides may be reduced to a negligible quantity by causing the latter to vibrate.

The insert shows the method used for making readings. A spring brass clamp carrying an index mark is fastened to the yarn. The movement of the index mark over the scale may be observed directly as the weight on the scale pan is increased. The scale is graduated in half-millimeter divisions and readings may be made to quarter-millimeters easily and to smaller sub-divisions with a little practice. The weight of the lower clamp, crossarm, weight pan, and yarn below the clamp are included in each statement of the tension applied.

To make a determination of straight length, the yarn is fastened to the upper clamp of the instrument, a load of 2.5 grams is applied, and the spring brass clamp is fastened at a point 400 millimeters below the upper clamp. After allowing one-half hour for the yarn to adjust itself to this condition, the reading is taken opposite the index mark on the scale. Additional loads are then applied up to 340 grams, one-half hour being allowed before each reading. It has been found by experiment that, after this time has elapsed, the unit elongation per unit of time is very small.

The stress strain curve is obtained by plotting loads and length readings, and from it may be easily computed the straight length of the yarn under no tension and the percentage of crimp.

Scott Hand-Operated Cloth and Rubber Tester

This very simple and extremely accurate device is 5 feet long, and is mounted on a strong oak back-board, fitted with three malleable brackets for fastening to the wall. Built on the dead weight or swinging pendulum principle, it has no springs to affect the test and therefore remains accurate, but can be easily calibrated without the use of special apparatus. The clamps are designed to make various styles of tests and the open space back of the flat gripping surfaces allows any number of tests to be made on large samples without cutting or stripping.

Special clamps can be applied for the purpose of making rubber tests which would make this machine very useful in checking results.

The test is made by turning the large hand-wheel which moves the stretching screw through powerful, machine-cut spiral gears. The pendulum or weight lever is suspended from two finely-made, self-alining, hardened steel ball-bearings which insure against friction and

SCOTT CLOTH AND RUBBER TESTER

unnatural resistance. The dial registers in pounds and the test is shown by the pointer which remains at the position of the break until reset by the handle suspended from the curved quadrants.

SCOTT SINGLE STRAND TESTING MACHINES

It is very important to know the strength of individual strands that make up the fabric used in tire building. To meet this requirement the single strand testing machines shown here have been designed. They are constructed on the dead weight principle, without springs or delicate parts requiring attention. The one on the left is operated by hand, and is built with 10-pound capacity by ounces, and 20-pound capacity by 1/8 pounds. The intermediate one operates by weights, and has a 10-pound capacity by ounces. A motor-driven tester of 10, 20 or 50-pound capacity is shown on the right.

In each machine the drive is made by a non-revolving screw, operated by two spiral-cut gears held in a solid cast-iron housing and packed in grease. The recording head is built as a balance wheel, rotating upon two large, self-alining ball bearings, and is extremely sensitive. There are no gears or other moving parts to interpose friction, and the pointer is attached directly to the balance wheel, indicating the breaking strain on a metal dial-segment. The pointer is held in the exact position of the break by a roll clutch, which prevents backlash, and is released and reset by a small hand lever.

The clamps automatically hold the end of the finest yarns. The yarn is then passed over the eccentric, thereby obtaining additional

HAND POWER

PLUNGER RELEASE

MOTOR DRIVE

clamping power and giving the tests all the advantage of the spool form without tying. Standard machines are arranged with a distance of 12 inches between spool centers. Loop tests are easily made with this equipment. A novel and easily read compensating stretch device is included on each machine, giving the net stretch at a glance.

SCOTT AUTOGRAPHIC TESTING MACHINE

This machine will automatically test rubber, tire fabric or other materials and write the result upon a standard letter-head. It will make tensile, elasticity, friction and other types of tests in general use.

It is mounted upon two heavy iron rail frames and is designed to be fastened to the wall in a vertical position. It can be driven by an electric motor insuring constant speed and uniform results. The draw bar, or stretching screw, is of special high-carbon steel 1 1/8-inch diameter and has a movement of 48 inches. It is operated by a heavy bronze nut and passes through the gear box without revolving. The downward or stretching stroke is made by direct gearing, allow-

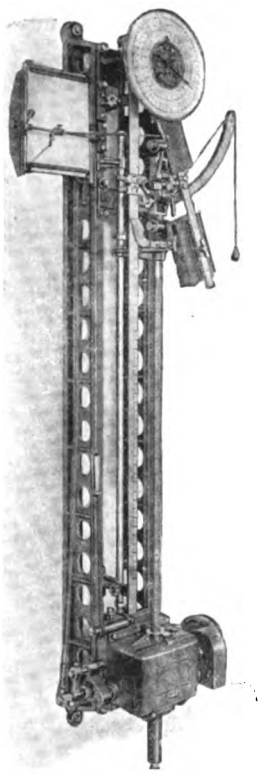

SCOTT AUTOGRAPHIC TESTER

ing no chance for slip or speed variation. An automatic reverse brings the moving clamp back at high speed.

The speed of stretch may be varied by a back gear arrangement to reduce from 20 to 2 inches per minute. This provides for "friction" tests on hose, belting packing, boot tops, etc.

The autographic charting device works automatically and may be used to chart both stretch and strength tests, and by pressing a but-

ton on the side of the recorder it will produce a magnified or enlarged chart of "friction" tests. All charts are developed on standard letter paper or a specially ruled sheet held flat by two rubber rollers. The line is drawn by red ink from a pen operating across the sheet as the platen moves downward in ratio with the movement of the stretching screw.

Several tests of both warp and filling may be recorded on the same sheet in ink of different colors and comparisons made of various samples. The sheet can then be placed in a typewriter for further data or filed in the usual way.

Rubber and fabric clamps, as well as spools with cleats for holding cords, etc., are furnished and are quickly interchangeable. An elasticity measuring device is attached to the frame of the machine and the length of stroke and distance between clamps may be varied by adjustment collars on the vertical control rod. When once set the machine will automatically stop and reverse at the same position with every test.

The recording head is simply but strongly built and has no delicate parts to get out of order. Its accuracy may be proved at any time without the use of special mechanism. The dial is of white celluloid with black figures and can be easily kept clean. The pointer indicates the maximum pull required to break the sample and remains in this position until reset by the operator.

A special machine of this type is adapted for testing all yarns, from the most delicate to the heaviest, as well as cloth and fabrics of every weight and weave up to 300 pounds capacity, the change being made without the use of tools in less than two minutes.

The recording head is designed on the true dead-weight principle and provides two weights with two rows of graduations on the dial, thus making a delicate machine for tests up to 150 pounds and heavier machine of 300 pounds capacity.

The cloth-testing jaws are of cast steel in deep channel section, provided with interchangeable anvils allowing tests to be made one inch and two inches in width or any combination of these widths in any length desired, gripping the sample at every point without cutting.

The driving mechanism is enclosed in a cast-iron box at the bottom of the machine and is operated by a one-inch flat belt requiring less than one-sixth horse-power.

Scott Combination Fabric, Cord and Rubber Tester

A recent pendulum type of instrument for both rubber and fabric testing with a special testing head for light-gage rubber tests is described in Chapter XXVII on "Tire Tests and Testing Machines."

Suter Automatic Strength and Elasticity Tester

This instrument is constructed so that it generates its own power by the use of a weighted carriage, the speed being controlled by an oil filled cylinder. Thus the material to be tested is stretched in a uniform

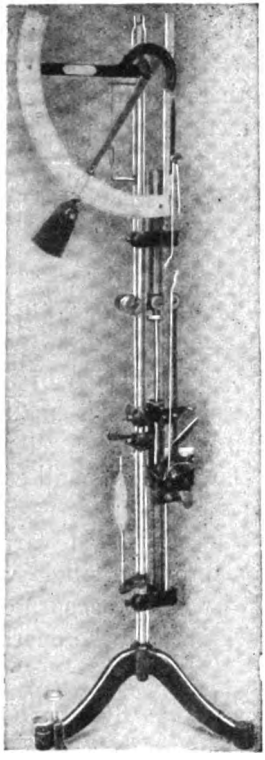

Suter Tester

manner during the testing period. It is used for testing yarns, threads and both vulcanized and unvulcanized rubber.

This instrument is made for breaking strengths of 5 to 3,000 grams or 1/5 of an ounce to 6½ pounds.

To improve the sensitiveness of this instrument, its strength scale is made in two parts, one for the fine yarns having a breaking strength of only a few ounces, and the other for the coarser ones. For the latter an additional weight is added to the upper weight lever.

In this apparatus the piston rod is connected with a carriage which holds the lower set screw. To prevent vibrations this carriage glides on rollers along the standard and a special guide bar. This carriage is

held in its upper position by a lever and it is in this position that the oil has to be poured into the cylinder, when setting up the instrument. The tests may be made in two ways, viz:

By either fixing a single length of thread, or threads, between the upper and lower screws, or by placing the threads upon a little wheel placed on the same pin as the upper screw and tightening the two ends with the lower clamp screw. In the latter case a double length is tested and accordingly the strength result has to be divided in two, since two lengths are tested at one time.

The elasticity in both cases is shown for the single span and this is either in millimeters or inches and fractions and also in per cent. directly. The strength dials are made either in English or metric system of weight.

Suter Yarn Twist-Tester

Tests can be made on samples from one inch to 20 inches in length with this yarn twist-tester. The tension of thread between clamps is always the same, being regulated with small weights. As the yarn is unwound, one turn of the handle loosens ten turns of twist, the left-hand clamp is drawn to the left by small weights holding the yarn taut, and at the same time the take-up is registered on a special scale. The take-up, especially on hard-twisted yarns, is a very important factor in determining the size of the single yarn used in making the ply yarn. The spinning twist can be accurately determined by means of a magnifying glass through which the operator can watch the fibers unwind.

Lowinson Yarn and Cloth Quadrant

This is an instrument for accurately and conveniently determining the number of cotton yarn and the weight of cotton cloth. Numbers of yarns from one to ten are determined by placing on hook *B* of the quadrant 40 lengths of either warp or filling yarn, drawn from a sample cut to the size of a template accompanying the instrument; the pointer will immediately indicate the number of the yarn, on the lower "4-yard scale." For numbers from 10 to 100, hook *A* is used.

The weight of cloth in yards to the pound and the percentage of size in cloth can also be readily ascertained.

Jury Autographic Fabric Testing Machine

This device consists of a horizontal fabric testing machine and a chart-holding mechanism. The latter is appropriately connected by means of lever and cord and pulley attachments with the grips *A, B*

holding the fabric test sample *C*. The frame carrying the chart is thus made to move horizontally in fixed relation to the strain upon the fabric, and vertically in accordance with the elongation of the fabric.

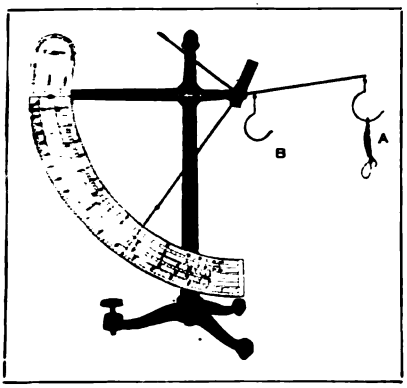

LOWINSON QUADRANT

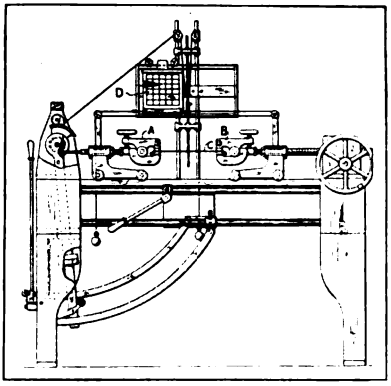

JURY FABRIC TESTER

Thus, a curve may be traced on the chart *D* by a suitable marker which will record the relations of tensile strength and elongation of the specimen under test.

LOWINSON THREAD COUNTING MICROMETER

The instrument includes a triangular scale, which can be instantly adjusted to provide an inch measure (four quarters), a linen measure,

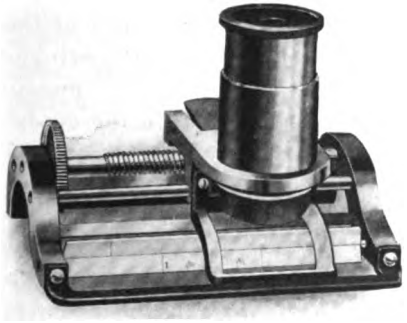

LOWINSON THREAD COUNTING MICROMETER

a millimeter measure, and the decimal parts of an inch. Being made of polished steel, each scale reflects the light upon the fabric beneath

the lens. Greater stability is afforded by placing the knob, which, upon being moved by the finger, moves the index within, instead of outside, the frame of the instrument. By a disengaging device the index can now be quickly moved to any place on the scale. To facilitate the counting of even the finest fabrics a lens of unusually high power is provided.

Preparing and Handling Fabrics

The preparation of pneumatic tire fabrics prior to impregnating, frictioning or spreading them with a coat of rubber is a very necessary preliminary. As strength is of prime importance, inspection for knots and faults is the first step, none but perfect duck being suitable for tire building. Then comes drying, for moisture causes rotting of the fabric and reduces the strength of the tire casing. Next, any nap must be brushed off and wrinkles removed, these operations often being simultaneous with drying or with calendering, spreading or impregnating. The stretch must be removed from tire fabrics before they are cut into bias strips, and in passing through calenders and from one calender to another it is important that the fabric be kept smooth and fed at uniform tension. For the several purposes specified, special machines and devices of various sorts are employed.

Curtis & Marble Cloth Inspector

This typical cloth inspecting machine has a cloth cradle with wooden rollers to hold a roll of fabric up to 18 inches in diameter. Where the cloth comes in larger rolls it is placed on stands. The cloth passes up the inclined table in full view of the operator and any defects are easily observed. A rolling head at the rear, which winds up the fabric, has spreader bars to remove wrinkles and turned edges. The fabric is stopped and started by the pressure of a foot lever. There is also a reverse motion by which the goods are run backwards. These machines are built in widths from 30 to 108 inches wide.

Parks & Woolson Fabric Inspection Machine

The roll of fabric comes to this machine on a truck and the end is threaded from the back of the machine between the weight roller and top draft roller above the desk, down to the winding roller in the wind-up attachment. The operator sits in front with foot on the treadle which automatically assumes a neutral position by means of springs. The pressure of the foot forward starts the cloth down the table, and removal of pressure stops the cloth, while pressure on the heel of the treadle reverses the cloth, feeding it up the table.

The horizontal lever shown at the left of the table shifts the belt on the tight and loose pulleys. The power drive shown on the left side of the machine may be mounted on the right hand side so

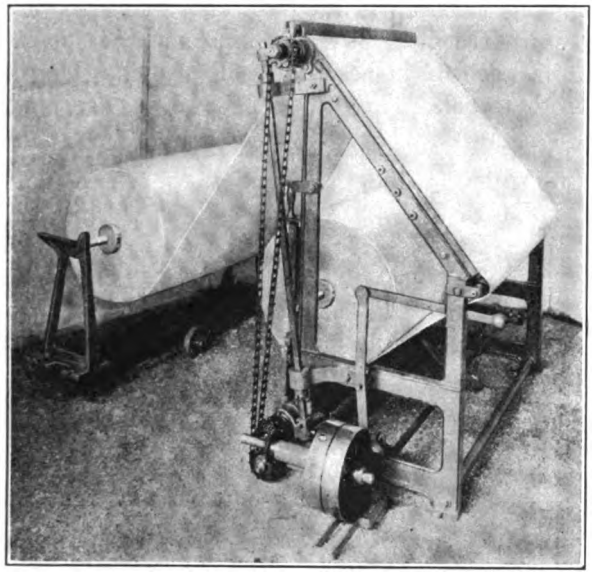

P. & W. Fabric Inspection Machine

that the machine can be put on either the right or left side of the room and the drive come next to the wall.

The rolling attachment back of the table holds the winding rollers in position with latched levers that can readily be thrown back and the roll of fabric quickly removed.

Farrell Six-Roll Dryer

This machine for drying tire fabrics consists of six hollow rollers fitted with steam connections. Each roller is 12 inches in diameter and any length up to 60 inches. For high pressure, say 40 to 80 pounds per square inch, the rollers are made of cast iron and turned smooth. For low pressure of about 12 to 15 pounds per square inch, the rollers are made of copper. The machine is geared to run in either direction, that the fabric may be run through as many times as necessary. At each end of the frame there is a combination wind-up and brake so that the fabric may be wound up either at the front or back. The driving pulleys are 36 inches in diameter with a 6½ inch face

and are run at 50 revolutions per minute. The machine is 7½ feet high and where the rolls are five feet long a floor space of 7 x 10 feet is necessary.

Cell Drying Machine

A cell drying machine is used by many tire manufacturers for removing moisture from the fabric. The machine shown consists of ten cells or units, each 62 inches wide and 52 inches long in the direction of the cloth travel. These driers, however, are made with any

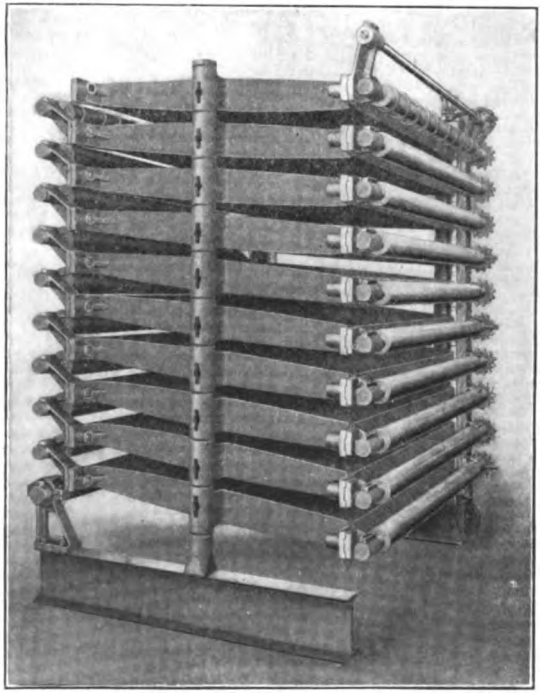

Ten Cell Machine for Drying Fabric

desired number of units. Each cell is a hollow cast-iron box heated by steam, circulation being effected by baffle plates inside the cell. The fabric is drawn by brass rollers over the heated surfaces of the cells, running first over the top cell and then being drawn over its under surface, then over the top of the second cell and so on until it leaves the bottom cell in a perfectly dry condition. The machine takes but a fraction of the floor space necessary for the old types of cylinder and steam coil driers. The brass rolls are driven by an endless roller

chain with a very small amount of friction. One feature of this drier which may be appreciated by new factories is the unit construction which permits of a machine of small capacity being installed at the start, and then, as necessity requires, the machine is given an increased capacity by merely adding other cells at the top of the existing machine.

Heath Vertical Brusher

The Heath brusher is typical of the machines employed for removing lint and dirt from tire fabrics. It is made with three bristle brushes for each side of the fabric, although other cleaning appliances, such as emery rolls, sand rolls, card rolls or steel bladed beaters may be used in place of part of the brushes. The fabric passes vertically upward from the bottom to the top of the machine, guide bars being employed to hold it in contact with the brushes and to prevent vibration. On the interior are dust chutes, through which the dust and lint pass to the bottom of the machine. At the bottom is a hopper with a pipe connected to an exhaust fan to carry away the dust. The brushes run in adjustable boxes and may be set to bear heavily or lightly against the fabric. Hinged doors at the front and rear give access to the interior. The machine is made with tension and spreader bars and with draft roll for drawing the cloth through. The illustration shows the machine running in connection with a calender roller at the rear for smoothing out the fabric and putting it up in firm, hard rolls.

Curtis & Marble Rolls for Removing Wrinkles From Fabrics

These twin-screw rollers are designed as an attachment for calenders, spreaders, bias cutters, brushing, rolling and measuring ma-

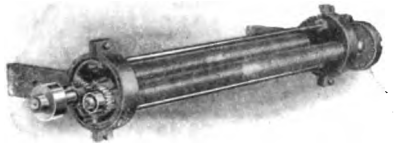

C. & M. Smoothing Rollers

chines, for the purpose of removing wrinkles, puckers and turned edges from tire fabrics.

The rollers are cut with right and left-hand threads running from the center towards each end, and are mounted in stands so that they may be turned in any desired position and give as much contact of the cloth as desired on each of the screw rollers. The screw rollers

may be adjusted to act on goods running horizontally, vertically, or at any angle. One screw roller acts on one side of the goods and the other screw roller on the opposite side to straighten out the selvages, no matter whether they are inclined to turn over toward the face or the back of the goods. Only one belt is necessary for driving both rollers.

Parks & Woolson Standard Cloth Measurer

The machine shown in the illustration is well adapted for inventory taking or where small yardage is measured daily or large yardage occasionally.

The cloth is simply pulled through by hand and, as the measuring wheel is turned, the measurement of the cloth is registered on the dial. The entire measuring mechanism is mounted on a hinged plate so the

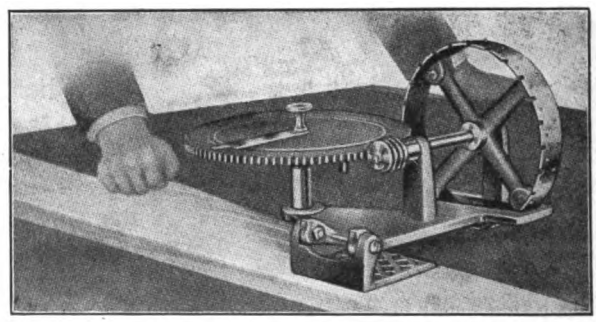

Parks & Woolson Standard Cloth Measurer

cloth can be easily introduced. An automatic lock is provided to stop the measuring dial when the cloth leaves the wheel. The pointer is set to zero by operating the thumb screw in the center of the dial.

The measuring wheel is three-quarters of a yard in circumference and rests directly upon the cloth, while it is prevented from slipping by minute pins in the rim. Should these pins result in injury to the cloth, the measuring wheel can be covered with felt, leather or plush.

United Electric Tire Fabric Cleaning Machine

With this application of the Tuec vacuum cleaning system tire fabrics are cleaned and liners renovated. The top of the fabric is cleaned in passing over the bottom tube, and the bottom of the fabric is cleaned in passing over the top tube. The tubes are of brass and properly slotted, with adjustable cover to fit any size of fabric, up to

and including 92 inches. These tubes pass from 160 to 320 cubic feet of air per minute, thus the fabric is given an air bath, removing soapstone, lampblack and other substances adhering to the fabric.

Birch Cloth Stretcher

This is a device for stretching and removing wrinkles from tire-building and breaker fabrics, without damage to finish, during the process of spreading.

The principle of stretching cloth from the center toward the selvage with this device is said to differ from that of any other employed for a similar purpose. The bristled rolls are made up of

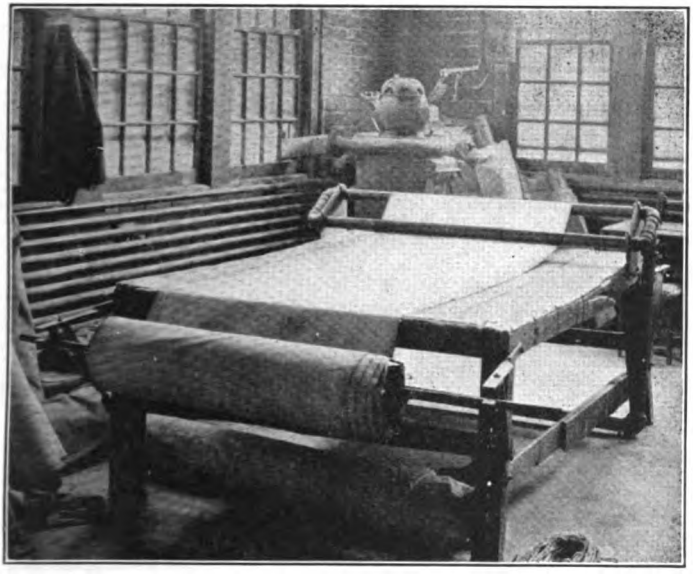

United Electric Tire Fabric Cleaning Machine

disk units, into which the bristles are set at an angle. These disks are assembled and firmly locked upon a shaft, so that the bristles point outward from the center of the shaft. The mounted shafts are hung upon a frame designed to allow the application of the bristled rolls to the drying cylinders or calender rolls or other surface, at any desired pressure, which is regulated according to the nature of the fabric to be stretched and the amount of stretch desired. An important feature of this stretcher is that it does not require to be threaded up. The cloth is run on the calender roll or drum in the

usual way, and the stretcher rolls are brought in contact with the goods. They may be quickly removed by a simple adjustment device. The stretcher rolls are not mechanically driven, but revolve when brought in contact with the moving surface of the goods. Each bristle catches a different thread of the fabric at the same time, which has

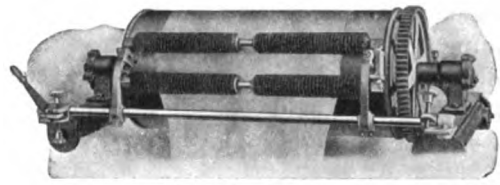

BIRCH CLOTH STRETCHER

the effect of pushing the cloth outward from the center toward the selvage without any undue strain, as the action of the multitude of bristles working in unison is absolutely uniform, and the perfect flexibility of the bristles eliminates all possibility of disturbing the finish of the goods in any way.

CHAPTER XI

CORD TIRE FABRICS AND CORD TIRES

CORD tires are an issue of growing importance in the tire industry. Through sheer merit they have won their way into favor with motorists. Although selling at higher prices than fabric tires, they are being used in ever increasing numbers and are furnished as standard equipment on many of the better makes of cars. Most leading tire manufacturers are now producing and recommending them in preference to fabric tires in the larger sizes because of their greater strength and resiliency, less internal friction and heat, longer life and increased mileage, lower required inflation, remarkable degree of immunity to punctures, stone bruises and blow-outs, better balance between tread and carcass wear, and generally increased dependability. Several of the younger tire companies make cord tires only.

Peeler Cotton for Small Cord Tires

At present cord tires are used chiefly on large cars, the high cost of long-staple Sea Island and Egyptian cotton limiting their field. It is said, however, that satisfactory cord tires made from Peeler cotton are a possibility which would give the small car owner an opportunity to use them. An indication of the importance of the cord tire in the American trade is the estimate that 2,000,000 were made during the year 1916, while 1920 produced 14,000,000.

Cabled and Thread or Cord Fabric Tires

There are in general use at the present time two well-known types of cord pneumatic tires constructed by different methods and commonly known as cabled tires and thread or cord fabric tires.

The carcass in the first type is usually built up from separate multi-strand cords, or so-called cables, previously impregnated with rubber. By a cord laying machine these cords are wound back and forth across the surface of the core, being looped at each end of the core over hooks or pins. The winding is diagonal and the second ply is applied at approximately right angles to the first.

In the second type of cord tire, a complete fabric is first formed with a number of parallel cords, held in place by very light filler threads. This is rubberized and cut into bias strips and the building done as in the regular fabric tire.

Cord Tires Reduce Average Tire Bills 50 Per Cent.

While it is generally admitted that the cord tire is a distinct advantage in the larger sizes, the fabric tire still has its advantages. It is a cheaper tire to make, and it is generally conceded that in the smaller size, where the flexing action is not so pronounced, it will yield approximately as good service as the cord tire. The greatest present field for the cord tire is in the larger sizes, where the great weight of the car and the big air cushion in the tire cause a pronounced flexing motion and movement of the fabric.

Tire manufacturers see no prospect that cord tire prices will drop to the level of fabric tire prices unless some revolutionary method of manufacture, not yet in sight, is developed. Despite the sweeping economy claims of many manufacturers, it was for a time an open question whether or not the cord tire is cheaper for the user on a per mile basis. It was quickly found to be no more expensive, however, and it was as quickly learned that it would stand a maximum amount of neglect and a lower inflation while insuring a remarkable degree of immunity from punctures and blow-outs on the road, which is in itself a great advantage. Experience has since shown that cord construction reduces tire bills per mile from 25 to 75 per cent., the average being 50 per cent. The former general estimate of five tires yearly to a passenger car is now reduced to four tires yearly due to the increased use and mileage of cord tires. A cord carcass that has not been abused in driving will outwear most rubber tread stocks and may be retreaded, thereby effecting a considerable saving.

Disadvantages of Fabric Tires

Certain characteristic disadvantages of fabric tires which are obviated by cord tire construction have encouraged development of the latter.

Poor Resilience

Despite its poor resilience in a tire carcass the ordinary, square woven canvas with the same number of threads of equal size and strength in each direction was generally adopted for tire building because of its great durability and the fact that its manufacture was well understood and mills were already equipped to produce it. Gradually, however, as extremely resilient tires were wanted for bicycle racing and electric automobiles, fabric weaves were modified to meet the changing requirements. Right here it may be well to state that the term "resilience," so commonly used with reference to tires, is defined as the amount of work given back by a body after being distorted, in recover-

ing its original shape. Obviously, then, if the material offers little resistance to change of shape, the resilience is proportionately greater.

Flexing Breaks the Fabric

The effective strength of the fabric entering into the construction of a tire does not depend entirely on its tensile strength, but in a large degree upon the method used in the construction which determines whether or not the entire strength of the fabric has been used to the best possible advantage. The desideratum is to so place the fabric that there may be no deterioration in it when it has left its virgin state and become a part of a completed tire; and to accomplish this, uniform tension throughout is essential.

The so-called fabric tire is built up of layer upon layer of closely woven cotton duck, with the threads running one way interlaced with threads which run at right angles to them. The threads are stout and tough, but the compactness of the weave essential to the strength of this sort of fabric is the real reason why fabric tires are inferior to cord tires. In the weaving process the threads in one direction are closely bent alternately under and over the threads in the other direction, and this bending of the threads is the beginning of a process of breaking which becomes complete when the friction, caused by the use of the tire, is developed to a sufficient point.

When the tire is in action it is constantly being flexed or bent out of shape. This is the province of the tire. For by being distorted it absorbs the shocks of the road instead of communicating them to the car and the passengers. This flexing or bending motion naturally causes a motion in the cross woven threads composing the fabric. The larger the tire the greater the distortion and the greater the movement of the threads. In the fabric tire, where the threads are interlaced, the strains are greater than in the cord tire. The cross threads begin to saw back and forth across each other, causing friction and heat to develop and eventually breakage and blow-outs.

Separation of Plies

Separation of the fabric plies also increases the deterioration of the fabric by sawing of the threads, and this separation of plies is hastened by flexure of the side walls. In bending the side wall, one part is put under compression, while the other is in tension, tending to cause a split along the neutral axis. A cord tire is capable of withstanding a greater amount of flexure in the side wall. Being more of a single unit, and more thoroughly rubberized than the fabric carcass, it resists to the maximum any tendency toward ply separation.

In frictioning the fabric previous to use, rubber is pressed into the meshes of the cloth, forming, as it were, a multiplicity of small individual rubber rivets and the greater part of the adhesion is due to their strength. With the tire changing its shape by flexing as it does in service, the shape of the mesh itself changes, having a tendency to destroy the adhesion of the rubber to the fabric; at the same time, the fabric changing position has a tendency to destroy the rubber rivet. The action is really an opening and closing one, which not only cuts on the rivet, but injures the fabric at the same time, and when once these rivets begin to let loose, the adhesive power is lessened, and the plies of fabric begin to separate, or the tread loosens from the carcass.

Moisture Permeates the Carcass

Another matter of importance is the fact that a tire made of square woven fabric is subject to rotting caused by any moisture which can get to the duck by reason of a cut in the tread, as every thread in each ply of fabric comes in contact with the adjoining threads, the whole of that ply may be affected, as capillary attraction will allow the moisture to travel the entire length of the cloth, while in a cord fabric tire the moisture would only affect the few individual cords in direct contact with the cut.

Advantages of Cord Tires

Thus, cord construction facilitates the production of the balanced tire, for the tire carcass is the limiting factor.

The Balanced Tire

By the balanced tire is meant one which maintains an even balance of service between carcass and tread. For example, if the carcass has perished through normal wear and there still remains a considerable amount of tread rubber not worn away, the tire is not balanced. The two should be exhausted at the same time or nearly so. The balancing of the tread for road wear and the side walls for internal wear is of economic importance to both manufacturer and user. It means savings in materials and production costs, affecting prices, reputation and guarantee adjustments, and determines the degree of satisfaction or otherwise of the user. When the tire is constructed strongest around the center line of the carcass, which receives no working stress, and the walls are not too thick, with enough tread to wear evenly with the side walls, it will give the greatest service for production costs, and this happy medium will balance the wear to the success of the maker and the satisfaction of the user.

Greater Flexibility and Resilience

In the cord tire all of the threads or cables of one layer run parallel to each other, hence there is no bending of one over another. The threads or cables of adjacent layers, of course, run at right angles to each other, but these layers are separated by a coating of rubber. Less resistance is therefore offered to flexing, making the tire more resilient, and less heat is generated by friction. The cords have full play in every direction and are capable of instantaneous adjustment or displacement when road obstructions are encountered, making the tire more flexible. Bouncing tests show that cord tires will bounce from 33 to 40 per cent. more than fabric tires and will continue to bounce for a longer time.

Even Tension and Little Frictional Heat

Because of the greater resilience of the cord tire and the even tension in all parts of the carcass, there is no excess work to be done in overcoming internal friction, and greater automobile motor efficiency is afforded, up to 15 per cent. increased horse power developed. The fact that cord tires do not heat proves that the saving is directly in the tire. This greater efficiency increases gasoline mileage from 20 to 30 per cent.; it permits greater load carrying capacity, greater speed, quicker starting, easier steering and longer coasting on hills. It has been found that with equal size tires a car will carry 800 pounds more load at higher speed up hill with cord than with fabric tires.

Better Resistance to Punctures and Stone Bruises

Careful tests and practical use both show that cord tires, because of their greater flexibility — the carcass bending but not breaking — are better able to withstand road shocks than fabric tires. Strength tests show that they have greater resistance against punctures and are practically immune to stone bruises. This tremendous reserve strength, amounting to 50 per cent. by actual test, combines with their extreme resilience to render blow-outs a remote contingency. Four-inch Silvertown cord tires, for example, have frequently been subjected to 800 pounds hydraulic pressure without failure after 6,000 miles' service.

Whenever the order of curvature of the fabric is changed from convex to concave under inflation, due to a severe blow, the inner plies are apt to break. The fabric structure is such that the warp and woof have no chance for elongation when severe blows are received. The result is that the shock cannot be distributed by the inner plies over any great distance. It is concentrated over an area about equal to the size of the object struck, where the material is overworked and

consequently breaks, forming what is known as a stone bruise. There may be no outward sign of injury, yet careful inspection on the inside would disclose broken strands in one, two or three plies. The tire has sufficient remaining strength to hold up for some time, but meanwhile the wearing of the material of the remaining strands in all plies is increased until finally a blow-out occurs. Blow-outs in the tread are almost invariably due to this cause.

Greater Buoyancy

Cord tires are more buoyant than fabric tires, requiring less air pressure up to 20 pounds to the inch. Should the inflation become less, the increased bending or flexing of the side walls would aggravate the friction or sawing action between the cross woven threads of a fabric tire and wear them out sooner. With cord tires 15 pounds pressure to the inch is sufficient and that reduction of five pounds is a big factor in increased riding comfort and decreased automobile depreciation due to vibration.

Larger Cross Section and Lower Inflation

As one of the chief objects of cord construction is to provide greater resiliency for the comfort of those who ride, and to prolong the life of the car through reduction of vibration, some cord tires are built larger in cross section than fabric tires, and have from 10 to 30 per cent. more air capacity than tires of the same rated size. This big increase enables an equal volume of air to support the car at a lower pressure, and it is therefore recommended that cord tires be inflated to 10 per cent. lower pressure than the usual table for fabric tires.

This oversize feature permits the car to be supported without undue side wall flexing, and to absorb shocks better than a smaller tire inflated to a lower pressure. As cord tire carcasses contain no cross threads they flex more easily than those built with square weave bias fabrics, and even if inflated to the same pressure give easier riding.

HISTORY OF CORD TIRES

Palmer and G. & J. Thread Fabrics

Modern cord tires owe their origin to the parallel thread fabric invented by John F. Palmer, and first used in racing tires on bicycles in 1893. That Thomas B. Jeffery was first in the field with a thread fabric tire as claimed by some, cannot be verified, but it is true that fabric bicycle tires were made at Indianapolis by the G. & J. Tire Co. in the early nineties.

Palmer Cord Tire

The name "cord tire" originated in England, where the principle was modified and first applied to the manufacture of automobile tires in 1900. In its later form its was known as the Palmer cord to distinguish it from the lighter bicycle tire. It consisted of two layers of cords lying parallel and crossing each other at such an angle that they were tangent to the rim and nearly in the line of strain, which fell

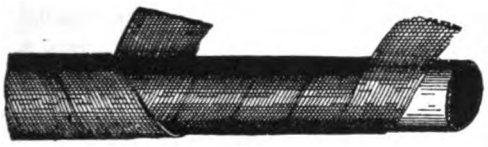

Palmer Thread Fabric

upon all equally. Each cord consisted of several threads carefully rubbered and flattened.

More recently, as the disadvantages in using round cord were recognized, a new type of ribbon or flat cord approximately one-half inch wide was developed and patented in both England and America in 1909. These inextensible flat strips can be placed on the tire core at a true tangent to the rim, that is, at right angles to the spokes of

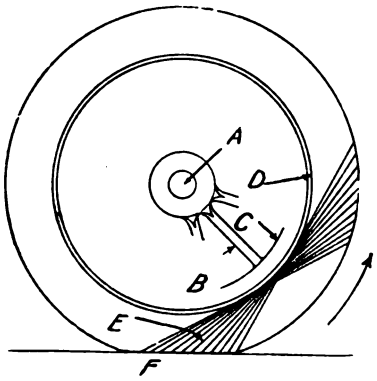

Palmer Ideal Tire

the wheel. This position gives the most efficient power transmission from the rim to the tread for the reason that force is best transmitted in straight lines.

Palmer tires have been and are still being made in England by the Palmer Cord Tire Co. In America they were at first sold by

the Palmer Pneumatic Tire Co., although from the outset The B. F. Goodrich Co. was the sole manufacturer. In 1898 the Palmer tire patents for the United States and the sole right to manufacture the Palmer tire in this country were bought by the Goodrich company and the Palmer selling company ceased to be a factor in the trade. In 1908, following the filing of applications for Palmer's later patents. the Palmer web tire for electrical vehicles was brought out by the Goodrich company, and in 1910 an airplane tire was brought out as a regular product which in construction was a modification of the Palmer bicycle tire. The latter was smaller than a bicycle tire in diameter but larger in cross section, the two sizes made being 20 by 2 and 20 by 2¼ inches. The Palmer was probably the first tire of cord construction to be used for aviation purposes in England, and it has ever since held a prominent place among airplane tires being used on the Handley-Page bombing planes in the World War.

Silvertown Cord Tire

The Silvertown cord tire was invented by two Englishmen, Christian H. Gray and Thomas Sloper and patented by them in England in 1903. A patent was applied for in the United States that

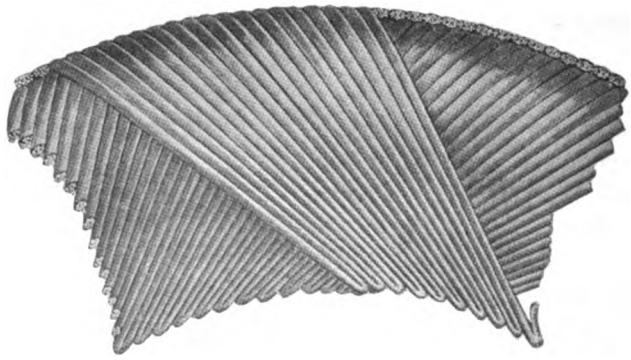

Silvertown Cord Construction

same year and granted in 1905. The tire was manufactured at Silvertown, England, by the Palmer Cord Tyre Co. and in the United States under license by The B. F. Goodrich Co.

Its make-up is as follows: first, a ply of rubber gum which becomes the inside or lining of the tire; then a ply of rubber impregnated cable cords, laid on diagonally, and on these another ply of gum; then a second ply of cords, laid on diagonally opposite to the first,

and two plies of gum cushion stock, and finally the breaker strip, outside tread and side walls.

Carlisle Cord Tire

Somewhat similar to the Silvertown is the Carlisle cord tire. Its carcass consists of two plies of single, continuous, large diameter, round cotton cord, rubberized and having a tensile strength of 235 pounds. The cord is laid diagonally completely around the tire, one ply at right angles to the other and is neither hooked to any fixture nor cut in any place. It is at even tension at all points; on the side walls, at the bead and on the tread the cord is under the same stress, yet at no point in the entire casing is the cord stretched. With every cord impregnated and surrounded with rubber and a thick layer of gum between the upper and lower plies, no cord in the casing touches or chafes against another and carcass friction and internal heat, the great enemies of all fabric tires, are almost completely eliminated. In the process of curing the rubber tread and cord carcass become a homogeneous mass so that separation of cord from cord, ply from ply or rubber tread from cord carcass are almost unknown, even though the tire be driven under-inflated. Moreover, road shocks are distributed around the circumference of the tire.

Miller Cord Tire

Under the Denman patent covering the Miller cord tire several layers of rubber impregnated cords are wound spirally around an annular core. The carcass is then slit on the inner circumference and removed to a second core on which the tire is completed. The process consists in first applying a coating of cement to the core upon which the cords of the first ply *A*, are wound at a definite angle. They are spaced apart at the tread portion and nearly in contact along the inner circumference of the core.

A coating of rubber is then applied to the first ply and a second cord ply *B*, is laid on the first at a reverse angle. This procedure is repeated until a structure is built up having four alternately superposed plies, *A*, *B*, *C*, *D*, of cords embedded in rubber and arranged at reverse angles in respect to one another. The carcass is then slit around the inner circumference and the beads interposed between the open plies. The core is then removed from the winding machine and a section ring attached to the inner periphery of the core, supporting the beads. The casing and tread are then built up, the two side rings for molding the beads applied, the whole wrapped and vulcanized by the open cure, or placed in a mold and vulcanized under pressure.

Under the Griffith patent also owned by the Miller Rubber Co., the cords are made by twisting rubber impregnated strands around a core of soft rubber. These are cut into equal lengths and laid parallel to one another on the annular core at an angle of 60 degrees. The bead cores are then applied and a second ply of cords is laid over the first at a reverse angle.

Archer Cord Tire

The Archer cord tire is also made of round cords having a tensile strength of over 180 pounds, but it has three cord layers at right angles to each other. It consists of an endless longitudinal ply of cord

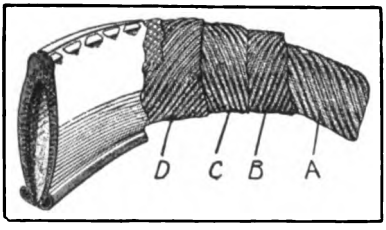

Miller Cord Tire

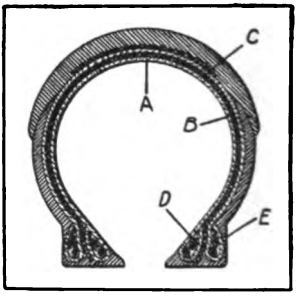

Archer Cord Tire

between two transverse plies with a layer of cushion gum between each cord ply. The longitudinal ply of cord forms a continuous bead or retaining means like the hoops of a barrel which, it is claimed, absorbs the traction or drawing strain from the motor.

The straight side casing is made up of inner transverse cords *A*, that fit within the intermediate longitudinal cords *B*, on which are superposed transverse cords *C*. The ends of the inner cords are looped over cable strips *D*, formed by strips of frictioned fabric doubled around annular wire cables. The longitudinal cords *B* are interposed between the inner and outer cord layers. The outer transverse cords *C* are looped over cable strips *E*. In the clincher casing the inner cords are bulged inwardly and looped over an inner cable strip and then passed over the ends of the outer cords and looped over the outer cable strip.

Among the more promising of the numerous novel ideas which have been advanced for the improvement of cord tires of laid as distinguished from woven cord construction may be mentioned those which follow.

Dickinson Cord Tire

The specifications for the Dickinson cord tire provide for individual twisted and cabled cords tensioned to absolute uniformity and thoroughly impregnated with rubber compound in order to preclude frictional movement within the body of the cords.

The cords are laid on the core in a series of strips made up of a number of parallel cords formed in cross section to compensate for the variable circumference between the bead and crown, and uniformly covering the full superficial area. The strip-cords are equally distributed on helicoidal lines representing the shortest path between the opposite beads in accord with the angle at which the cords are laid, so that each cord occupies the same relative angular position and bears its full proportion of the stresses and strains of service.

To form the cord strips that give the progressive increased width from bead to crown, the contour of the cord varies from cylindrical to elliptical, but the displacement is accomplished without rupture of the fibers and the original strength is not impaired. All cords are insulated to prevent frictional contact between them in the separate plies and between the cord plies themselves. To eliminate multiple frictional surfaces, two plies only are used, as more plies increase the cross-sectional circumference between the first and succeeding plies, amplify frictional action and impose strains on the cords in attempting to meet the constantly changing conditions of flexing in service.

Dees Cord Tire

The Dees cord tire is built up on another new type of cord laying machine. The tire core is revolved and the rubberized threads are wound around it by a rotary winder in the form of a reel that carries the four thread bobbins and also the rubber solutioning cylinders. The

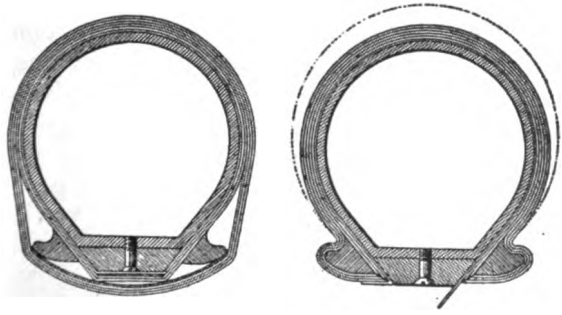

Dees Cord Tire Construction

threads are first impregnated with rubber solution and then passed through rubber dough under pressure. They are then wound under tension around the core from one set of bobbins diagonally in one direction while the other ply from the other set of bobbins is wrapped diagonally in the other direction; thus the threads of the two plies cross. When the core has turned one complete revolution it is covered with a double ply of oppositely placed diagonal threads. Separator rings are applied to certain parts of the carcass and the thread winding operation continued. The separators prevent the different plies from sticking to each other so that the bead rings can be inserted and the carcass structure severed on the inner circumference in forming the beads and completing the casing.

Ives Cord Construction

The Ives patents of 1916 cover a fabric tube built with two layers of rubberized cord, the inner layer laid at right angles to the

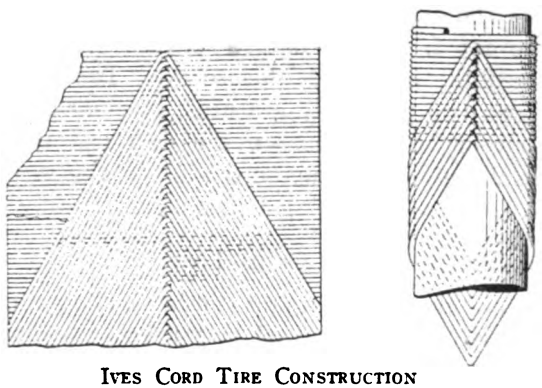

Ives Cord Tire Construction

axis of the tube, and the superposed layer comprising cords extending from the tread line diagonally half way around the tube. and then diagonally back to the tread line; also a two-ply fabric strip composed of rubberized cords, the inner layer extending at right angles to the edges, and the superposed layer extending diagonally from the center to the opposite edges of the strip.

Fisher Cord Tire

Endless loops of rubber impregnated strands are twisted, forming cords with loops at each end which are laid over the core and held by the bead wires which pass through the loops of the cords.

Kline Cord Tire

The carcass of this tire is built up with tapes or ribbons, consisting of interwoven strands embedded in rubber or similar material with a relatively thick middle portion and edges connected by comparatively thin webs. The tapes are applied to the inner sheathing of the casing by cementing them together in two diagonally opposed overlapping layers, the edge of one tape overlapping the edge of the adjacent tape and forming a layer of substantially uniform thickness, inasmuch as the webs are about half the thickness of the central portion of the tapes. The inner layer is anchored by folding it outward upon the base of the bead, while the outer layer is anchored by folding it inward upon the fold of the first layer.

Interlocking Cord Tire

This tire also depends upon a carcass consisting not of round cords, but of wide, flat braided tapes or ribbons of twisted cord strands, these tapes being applied in diagonally opposed layers, the surface of the tape having sufficient roughness to give the rubber an unusual grip or interlocking strength.

Cord Fabrics

It can be safely said that with few exceptions, all cord tires now in use are made from a modification of the well-known thread fabric used in making hose pipe bicycle tires. Cord fabric is really not a fabric at all. It is a layer of very strong, hard-cabled, parallel warp separate cords, rubber impregnated and embedded in rubber, all running in one direction, laid close together, side by side yet not touching, and without the usual filler other than small threads of soft, light yarn, widely spaced about three-eighths of an inch or more apart, that act as fillers but are only a temporary support to hold the web in position during the building of the carcass.

In fact, the usual practice is to inflate an air bag within the unvulcanized casing that results in each cross thread being broken before the casing is finally cured.

Standard Cord Fabric

Thirteen and one-half-ounce cord fabric was formerly used for the average cord tire, but the standard is at present 15.2 ounces. It is sometimes calendered directly from the fabric roll. The fabric is usually coated on a spreader which applies several coatings of rubber, the thickness of the solution and the number of coatings depending on the type of tire. The spreading process not only impregnates the individual cords

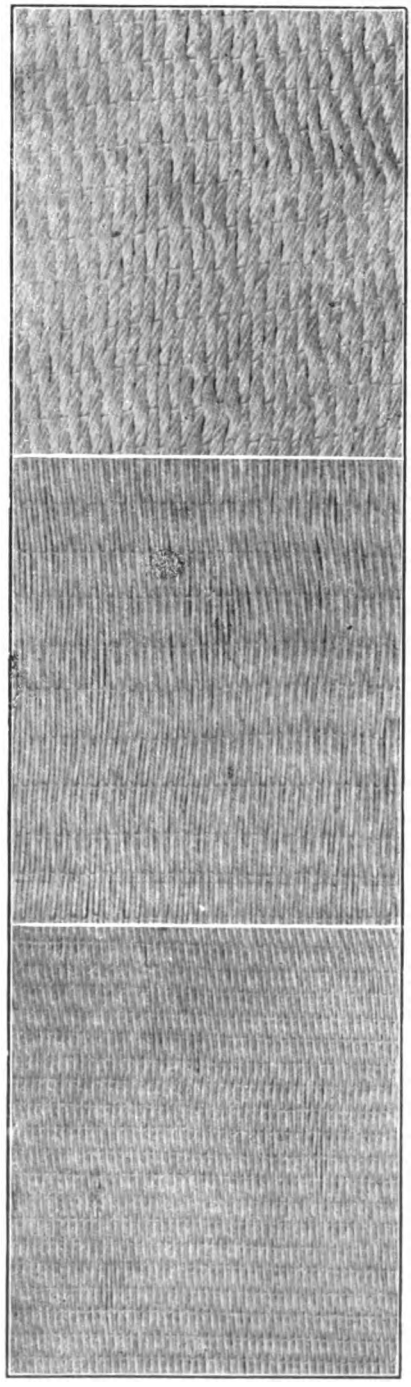

Three Types of Cord Fabrics

but fills the spaces between them with rubber and preserves their alinment, which is difficult in calendering. The fabric is frictioned and skim-coated on the calender, then cut on the bias into strips of the required width and length, and finally used to build up the tire carcass on a core by the usual hand method, or with the aid of a tire building machine.

Advantages of Cord Fabrics

Thus it will be seen that all air is expelled from the cord, the individual warp cords are imbedded in rubber, forming a complete insulation, and as there is a ply of rubber between the different plies of cords, the cords are prevented from coming in contact in crossing each other. By this method of construction each cord, while acting under the same conditions and in conjunction with the other cords, operates separately, reducing to a great extent the friction and consequent heating when the tire is subjected to air pressure and unusual strain due to fast driving. As a result of the virtual elimination of filler threads in a woven cord fabric, the tire will literally wear out in road service rather than have its usefulness prematurely ended by self-destruction. The absence of these threads permits the tire to flex or change position in service with minimum resistance, making it very pliable, resilient, fast and free from internal heating.

With a woven cord fabric tire, instead of very small rubber rivets there are continuous strips of rubber between the cords running the entire length of each cord, uniting the rubber of the whole tire so thoroughly and holding together the entire carcass of the tire so solidly and securely that the tire can be vulcanized into virtually one solid, homogeneous mass, with merely the threads laid in the rubber, it being practically impossible for the rubber tread of the tire to leave the fabric and form lumps, even under the worst abuse.

There is apparently a limit to the size of the cord that can be successfully rubberized in cord fabric form. When the attempt was made to use a heavy warp cord in order to make up for the several plies made necessary by the use of lighter cord, the result was a failure, as the rubber could not be satisfactorily driven into the heavy 28½-ounce cord fabric.

United States Royal Cord Tire

The cord fabric used in this tire is woven with very strong warp and light, soft filler threads, the latter spaced about half an inch apart and serving only to hold the web in position during the preparation of the carcass. The rubber that is applied to the fabric and be-

tween each ply, forms a covering about each thread in such a way that when the tire is completed no thread touches nor chafes against another, and each thread bears its full amount of the inflation and strain.

In the manufacture of this tire the fabric is first impregnated. so that all of the individual threads are thoroughly covered with rubber. By a special frictioning process, the spaces between the threads are then rubber filled, after which the surface is skim coated with rubber. The tires are then built up on a core in the usual manner. their structure comprising four double layers of cord fabric, a rubber carcass cushion, breaker strip, two plies of cushion rubber and the tread.

Goodyear Cord Tire

In Goodyear cord tires a series of hard cabled parallel cords, without any cross weave other than the web supporting threads, are imbedded in rubber in the usual way. The resultant fabric is then

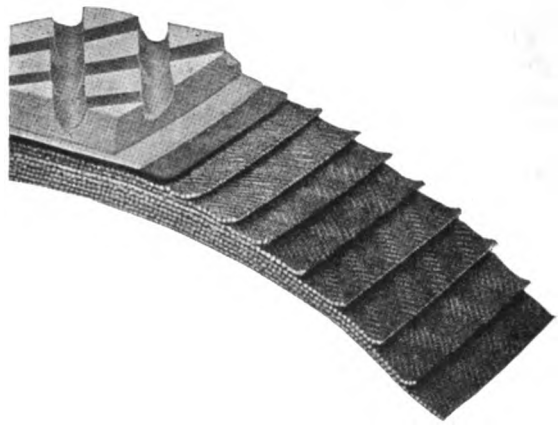

Goodyear Cord Fabric

cut into bias strips and laid up on the tire core by the Seiberling-Stevens-State tire building machine.

Various novel ideas have been advanced for the improvement of cord fabrics, and looms and other machines for producing them. Among the more promising of these are the following:

Subers Cord Fabric

The inventions of Lawrence A. Subers follow closely along the lines of the cord principle in the development of a new laminated fabric that depends on a flat tubular fabric building strip. Moreover, the

mechanical method of constructing the fabric is novel in principle. The fabric is made up of tubular bands, impregnated with rubber, that have alternating wide and narrow portions so that when it is made up in the form of a casing the wide portions will correspond to the tread and the narrow portions to the sides of the tire adjacent to the beads. The fabric is laid, not braided nor woven, around an endless tubular mandrel corresponding in cross section to the general shape of a tire, by a machine that lays the strip around the moving mandrel at an angle of 45 degrees, while another layer of strip is simultaneously laid at opposite angles, forming a laminated tubular fabric. This fabric is slit on the inner circumference and removed from the mandrel

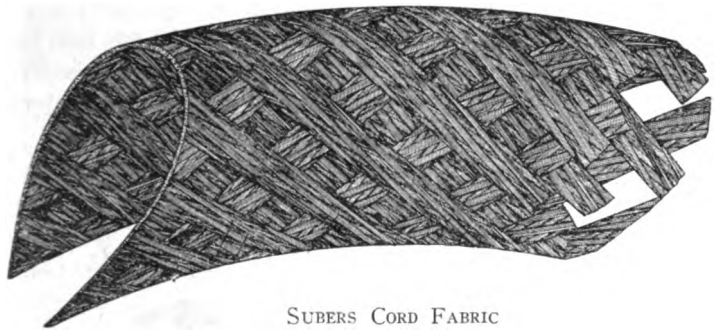

SUBERS CORD FABRIC

in continuous lengths. These strips are of the correct width and shape to form the various plies of the tire carcass, which is built up on a separate machine.

LISTER CORD FABRIC

Lister's tire fabric strip is made up of two layers of spirally wound rubberized cords, with the cords of one layer laid at an angle to the cords of the other layer and an intermediate layer of rubber formed by a spirally wound strip of rubber. The fabric strip is formed on a machine having a traveling core composed of an endless chain of segments of the same cross section as the finished tire. The tubular strip thus formed is cut on its inner periphery, forming an open tube which is ready to be applied to the core of a tire building machine.

MUSSELMAN CORD FABRIC

This fabric, manufactured under the Pye patent of 1917, is obtained in lengths greater than are possible by cutting standard cord fabrics on the bias. It is made by winding one or several layers of cord in close contact on a huge cylindrical drum, each layer being

coated with rubber solution to hold the threads together. The drum is then revolved at high speed and the fabric cut into spiral bands of the required width. After cutting, the completed bands, in which the strands lie at an angle of 45 degrees, are removed from the drum and employed in building cord tire casings in the usual way.

Miller Metal Cord Tire

Instead of cotton cords, wires are twisted and wound with friction tape, forming metallic cables. The tire is built up in the following manner: A strip of friction fabric is first placed on the core. Over this is placed a strip of rubber stock and then a layer of metallic cables is laid diagonally across the core. On this layer is placed another strip of rubber stock and then another layer of metallic cables is laid diagonally and at an opposite angle to the first; then another strip of rubber stock and a strip of frictioned fabric that extends from bead to bead: and finally the breaker strip and tread are applied.

Fabri-Cord Tire

A cord tire for which the makers claim special features is the "Fabri-Cord" tire, which is absolutely guaranteed against stone-bruise

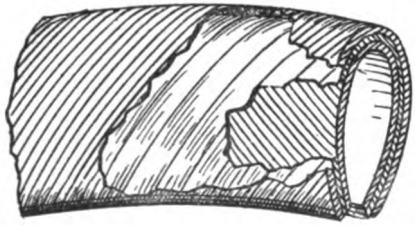

Lister Cord Fabric

Fabri-Cord Tire

blow outs. "Fabri-Cord" tires combine fabric plies and cord plies in their construction, having two inner plies of heavy fabric next a cushion of rubber from bead to bead, then two plies of cord for resiliency, two more plies of fabric, two more of cord, one of fabric to prevent loosening, and outside of these a rubber cushion ply, a breaker and a heavy tread.

CHAPTER XII

CORD TIRE FABRICS AND CORD TIRES—(Continued)

Development of the Motor Truck

In many respects the introduction of the motor truck has been not unlike that of the steam locomotive, some 90 years ago. When the locomotive was ushered into a wondering and incredulous world its sponsors entertained fanciful visions of its future importance while the "iron horse" was still little more than a giant toy. Road conditions prohibited its use. Then followed a period during which the steel track was perfected. First, the rails were of hardwood strips, then ribbons of iron were replaced on these wooden rails, next all-iron rails were substituted, and eventually the heavy steel rail of to-day.

The adaptation of the motor truck to present-day traffic uses has been accomplished by conquering just such trying conditions as those which confronted the locomotive promoters of nearly a century ago. Gasoline makes the giant truck go, but without a suitable "track"; namely, suitable tires, its commercial or industrial advantages remain quite limited.

First Equipped with Solid Tires

The first motor trucks were fitted with solid rubber tires, since at that time no other tires were available. But they were far from satisfactory for every purpose. Overloading was the common cause of failure, while their inability to negotiate bad roads set decided limits to their utility. Manufacturers began at once to develop tires that would permit the motor truck to branch out into broader fields of service. The advantages of pneumatics had long been demonstrated on the passenger car and the plausibility of this equipment for the commercial truck was the first thing to be investigated.

Spectacular Introduction of Giant Pneumatics

In the early spring of 1917, just before the entrance of the United States into the war, a motor truck service was inaugurated over the 1,400-mile, round-trip route between Boston and Akron on a regular schedule with pneumatic equipment, the object being to secure data for defining the distinctive fields of solid and pneumatic trucking.

It thus occurred that the inhabitants along the Lincoln Highway through Pennsylvania looked up in surprise one day to see a large five-ton truck rolling along at touring-car speed, on eight and ten-inch

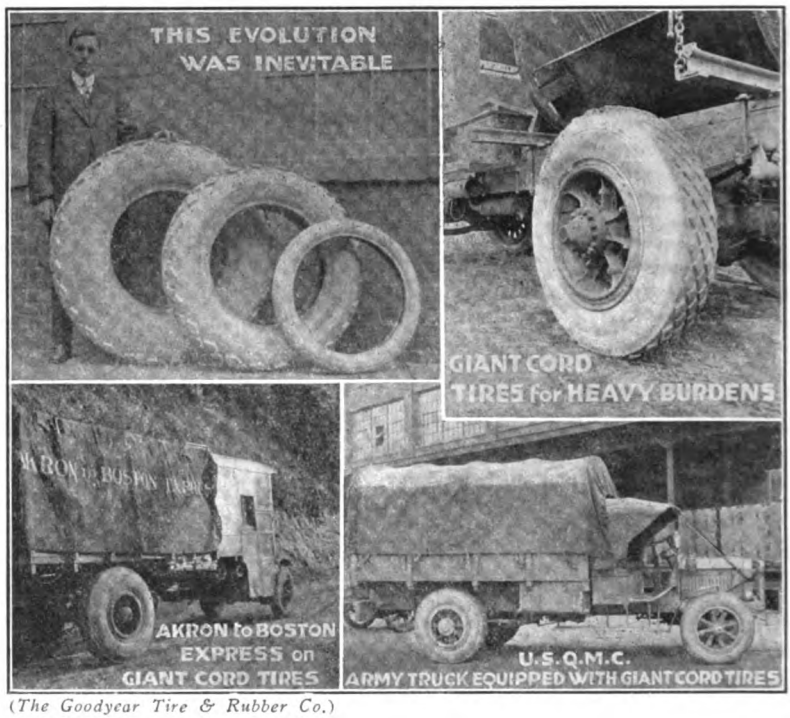

(*The Goodyear Tire & Rubber Co.*)

A New Era for Pneumatic Cord Truck Tires

pneumatic tires, actually beating the one-way express schedule, yet with such smoothness of motion that a spare operator could sleep as comfortably aboard as in an ordinary Pullman berth, if not more so. After several trips back and forth, three more long-distance trucks joined the pioneer to form an express fleet, running on regular schedule from Ohio to New England points, and people began to wonder whether this might portend a new era in modern freight transportation.

The Akron-Boston Express

The Akron-Boston experiment was fairly providential in relation to the war, when railroads were badly overburdened and when motor trucks had been called upon to save the nation from the peril of totally inadequate transportation facilities and to perform many feats to which they were wholly unaccustomed. Equipped with solid tires they had been pressed into service for hauling loads over long distances between cities, and even from the Middle West to the Atlantic seaboard.

Two important facts had been revealed to the Government through these experiences. First, that motor trucks on solid tires were largely

limited in usefulness to hard surfaced roads, since these tires would slip and spin, or stall, in mud and ice and snow. Second, it was clear that the pounding of the solid-tired truck was damaging to all roads.

A prime end of the Akron-Boston experiment was to demonstrate to the United States Government that the giant pneumatic tire offered the opportunity for motor trucks to become vastly more useful than they ever could be on solid tires. It was shown over a period of two years on every type of road and through the snowy passes of the Alleghenies that pneumatic tires not only enabled trucks to negotiate snow and mud where solid-tired government trucks had stalled, but also that the pneumatic equipment meant a marked saving to the roads themselves. How well, has been attested by the rapidity with which the pneumatic tire was adopted by the government truck service and

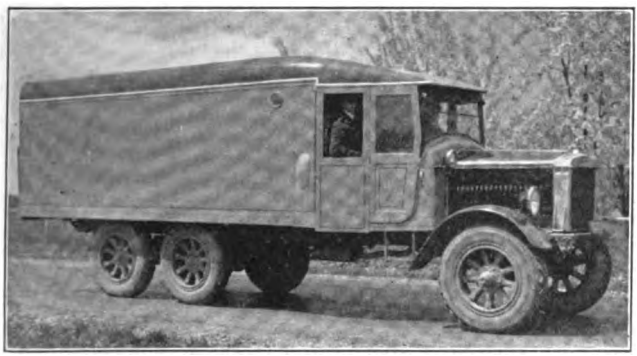

SIX-WHEEL TRUCK WITH TANDEM REAR AXLE

also by the public following upon that epoch-making trial. Thousands of private truckers hastened to adopt the new equipment, the economy and efficiency of which is confirmed by the continuous operation of the Akron-Boston service to the present day, two big trucks still handling rush shipments from Boston to Akron long after the railroad war-time shipping crises has passed.

EXPERIMENTS WITH SIX AND EIGHT-WHEEL TRUCKS

Realizing that larger trucks must be used to solve present and future transportation problems, the Akron-Boston express proved an excellent tire-testing experiment. The arrangement of tires on trucks presents three possibilities: the ordinary truck with giant tires on four wheels, dual pneumatics on the rear, and trucks with six or more wheels.

It was learned that while it is not difficult to make 12, possibly 15 and perhaps 20-inch tires, it is questionable whether they are the tires for this service. When considering 10 and 12-ton trucks it was found that the truck body and center of gravity were too high. The remedy was to use multiple wheels, that is, more than four, say six. Four wheels have proved inefficient on European railroad cars as compared with American freight cars, and that holds good for motor trucks also. On tandem wheels the riding quality and carrying conditions are better than on dual tires on the same wheel. By putting the extra wheels under the rear end of the truck body the damage to tires is avoided, which follows with large single tires, because tires are distorted with a big body overhang, and more traction is obtained with a four-wheel drive. An eight-wheel truck is now being tested with promising results.

Tandem Axle Construction

On account of the large size and weight of the 48 by 12-inch pneumatic tire, four smaller tires were applied to the rear of the

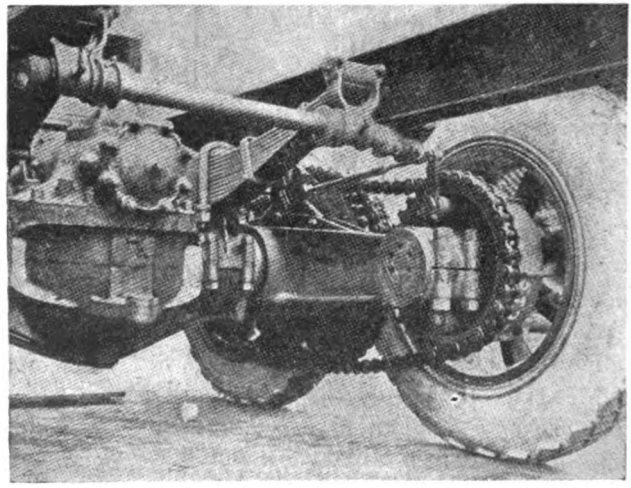

First Application of Four Small Tires to Rear Wheels

truck, instead of two of the excessively large ones. The first arrangement tried consisted of a more-or-less standard rear axle with a walking beam adapted to each end and the wheels mounted upon trunnions from this walking beam, the springs being mounted upon the axle and attached to the frame on the inside. Chain drive was made use of in this case, which is about the only feasible drive with this arrangement.

This construction ran successfully for about 10,000 miles before serious failure occurred. But it was enormously heavy, the chains were often jumping off and the brake mechanism did not work satisfactorily. However, it served to show that satisfactory tire mileage could be

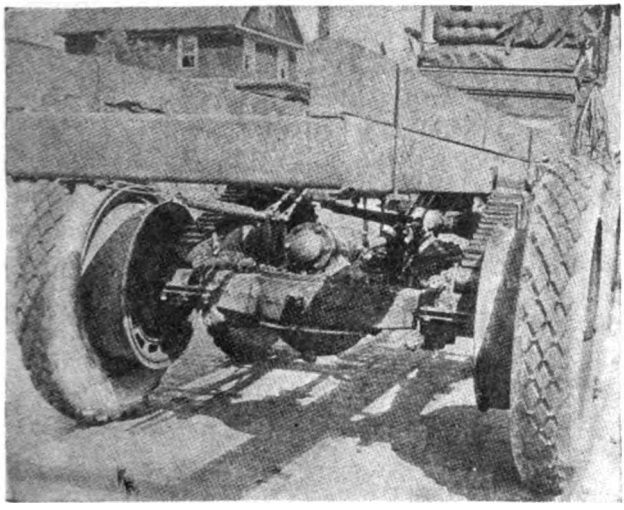

FURTHER DEVELOPMENT OF THE TANDEM AXLE CONSTRUCTION

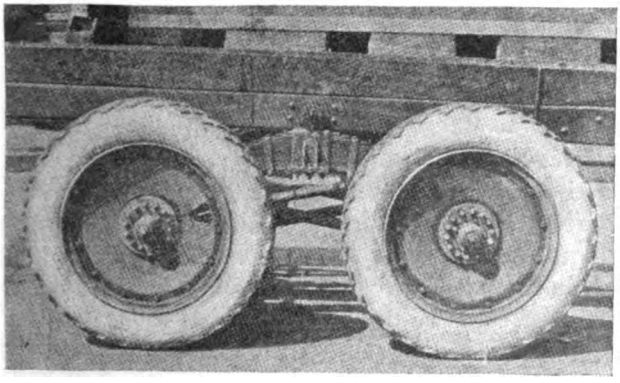

ANOTHER VIEW OF THE TANDEM AXLE CONSTRUCTION

secured from such an arrangement and that there was a good possibility of adapting four small tires to the rear wheels. To further develop this point, the tandem axle construction shown in the two illustrations above was built. This construction appears to have good possibilities. The following diagram indicates another very feasible design to adapt the tandem axles.

Some of the advantages of the six-wheel truck over the regular type of the same capacity, on 48 by 12-inch pneumatic tires and on the regular equipment of solid tires, are that compared with the pneumatic-tired four-wheeled truck the saving by using four smaller tires is sufficient to purchase three or four complete spares, or approximately $500 per truck. Regarding ease of handling, each 40 by 8-inch tire weighs only 119 pounds, whereas each 48 by 12-inch tire weighs 398 pounds. Carrying a spare tire in each case, the reduction in axle cost, the use of two rear axles in tandem results in the advantage that small axles are normally in large production, with consequent lower costs, whereas large sizes are made only in small quantities, with extremely high costs. The actual saving amounts to about $120 per truck. As regards weight saving, four 8-inch wheels with brake drums,

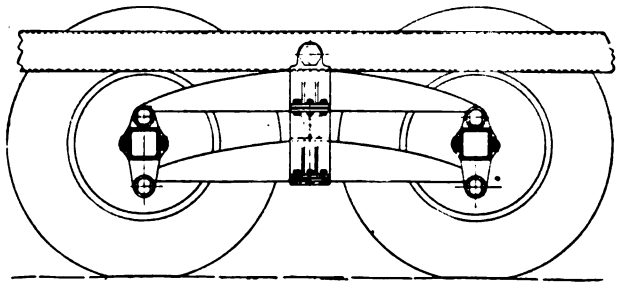

A Feasible Design for Tandem Axles

etc., weigh 77 pounds more than the same equipment for a 12-inch tire. The total saving in weight is 814 pounds.

Considering traction qualities, the area of contact of four 8-inch pneumatic tires upon the road is about 27 per cent. greater than that of two 12-inch pneumatics. This additional surface, keeping the tires from sinking in soft places, gives better traction when most needed and, in ordinary service, the additional area gives them a better chance to take hold. As compared to solid tires in winter service, off of paved roads, the four pneumatic tires have all of the advantage.

The four-wheel combination has about the same advantageous effects over single-axle construction that the pneumatic would have over solid tires, in regard to economy. With the four-wheel combination, when passing over an obstruction in the road the chassis is raised only one-half the distance it would be raised in the regular type of construction. This reduces the acceleration of bodies upon the chassis to one-fourth that with ordinary construction. Thus, by

reducing shocks and vibration, the number and cost of repairs, due to crystallization, fatigue of metal and the like, are reduced by a large percentage. The tandem construction makes for such exceptional riding qualities that a glass, filled to within an inch of the top with water and attached to the rear of the six-wheel truck, lost none of the water even when running over a decidedly rough road.

The most destructive factors of the operation of vehicles upon pavements are the wheel load and the wheel thrust. The accompanying illustration shows that a heavy wheel load causes the road to fail by breaking through the pavement. If, as in the case with the tandem

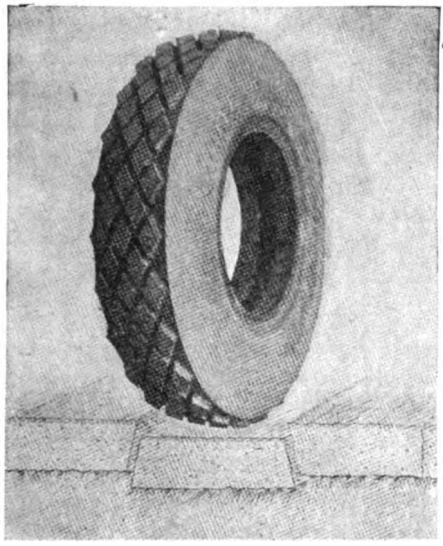

A Heavy Wheel Load Breaks Through the Pavement

construction, the wheel loads are cut in two, the chances are that the wheels will seldom find spots in the pavement weak enough to break through, even if a 5 to 7-ton load be carried on the truck.

The twin-axle combination has a decided advantage over both regular pneumatic-tired and solid-tired types in that four brakes of 21-inch diameter are used in place of two brakes of 21-inch diameter. The six-wheel truck has a greater operating radius. Pneumatic tires permit of an increase of average speed to double that of solid tires, and the combination of four small tires on the tandem rear-drive wheels will permit of increased minimum speeds on bad roads.

Dual Pneumatic Tires

Dual pneumatics, that is, two tires on the same wheel, are not favorably regarded by experts. Dual tires do not share the load equally because the inflation is seldom kept alike in both tires. Because of crowned roads, and more particularly rough roads, one tire takes more than its share of the load temporarily and this will injure the tire. An exaggeration of this condition is when one tire goes flat and the other takes all the load without the knowledge of the driver. The tire which still holds air is so badly overloaded that it is sure to be injured, if not ruined. Changing an inside tire, in the case of dual tires, necessitates removing both. Dual tires are too easily abused and prove more expensive than either of the other possibilities.

Truck Design for Pneumatic Tires

The general introduction of the pneumatic tire for motor trucks would have a material bearing upon the design of the truck itself, to get the most good from the use of such a tire.

Road Speeds

Present Solid Tire Gear Ratios	Average Governed Speed, m. p. h.	Capacity, Tons	Pneumatic Tire Speed m. p. h.
7 to 8	17	1 to 1½	30
9 to 10	15	2 to 2½	30
11 to 12	13	3½	25
12 to 13	10 to 12	5	25
14 to 16	9	7	20

Tire Size, In.	Rear Wheel r. p. m.	Drive r. p. m.	Pneumatic Tire Rear Axle Gear Reductions
36 to 38	280.0 to 265.4	1,450	5.18 to 4.47
40 to 42	252.1 to 240.1	1,325	5.26 to 5.52
38 to 44	221.1 to 191.0	1,200	5.43 to 6.28
40 to 48	210.1 to 175.0	1,200	5.72 to 6.86
42 to 44	160.1 to 152.8	1,200	7.50 to 7.85

The main factors bearing upon the problem of truck design for pneumatic tires are as follows: (1) speed, including road and engine speeds, rear axle gear reduction and air brakes; (2) traction, including engine torque and transmission gear reductions; (3) shock effects, including stresses introduced and the necessary factor of safety of sprung and unsprung parts; (4) emergency equipment, including tire pumps and spare tires.

The accompanying table shows the road speeds considered satisfactory, together with the usual rear tire specifications for various sizes of trucks. The engine speeds are figured on the basis of 1,200 feet per

minute piston speed, which can be considered a good average. Higher speeds set up considerable vibration and add discomfort to driving.

Fixing the allowable stress requires an investigation of the cushioning effect of pneumatic as compared with solid tires.

The accompanying diagram shows the rate of deflection of pneumatic tires and corresponding solid tires, together with a curve indicating how the solid tire depreciates in resilience with age and wear. It will be seen that for a given load the pneumatic tire deflects four times as much as a solid tire.

It is believed possible to build a 5-ton motor-truck chassis equipped with pneumatic tires for only $200 to $300 more than a corresponding solid-tire truck, and that the net weight reduction may be easily 1,000

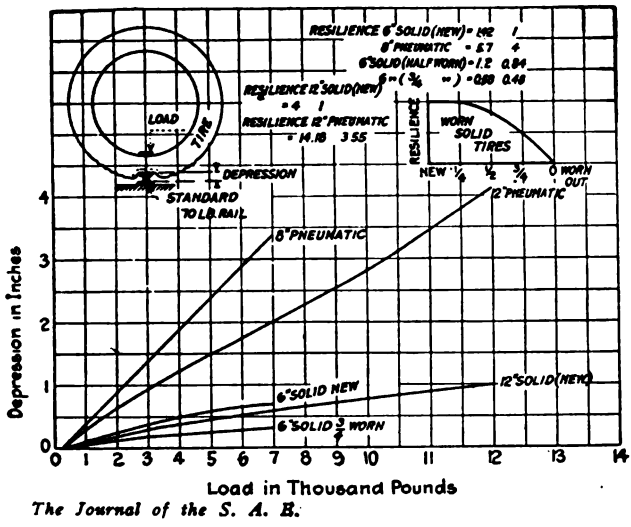

The Journal of the S. A. E.

FOR A GIVEN LOAD THE PNEUMATIC TIRE DEFLECTS FOUR TIMES AS MUCH AS A SOLID TIRE

pounds without resorting to aluminum where it is not yet considered commercially practical.

SUMMARY OF PNEUMATIC TIRED TRUCK ACCOMPLISHMENT

The experiments of the Goodyear Tire & Rubber Co. with its fleet of pneumatic tired freight-carrying motor trucks has resulted in developing truck efficiency from a truck weighing 15,800 pounds and carrying a pay load of 3,850 pounds to a truck weighing 8,000 pounds and carrying a pay load of 7,000 pounds. This has all been brought about through the use of pneumatic tires, thereby being able to carry

a much heavier load on a much lighter truck, and on a smaller sized tire, automatically increasing the earning power of the truck.

These experiments prove that commercial trucks are uniformly built unnecessarily heavy for use with pneumatic tires and that, when pneumatic tires are used, weight can be materially reduced and the pay-load capacity increased. They also show that the lessening of the weight in turn allows the use of a smaller and less expensive tire for the increased pay load; that more can be carried on a light truck when it is hauled on air, and that pneumatic tires permit a light truck to haul a larger load. This all helps to sustain the contention that pneumatic-tired trucks will use less gas, have smaller repair bills and generally give better satisfaction.

Operating Costs

The following tabulation shows the performance of a fleet of pneumatic-tired trucks covering a period of six months:

Wingfoot Highway Express

Year 1919	Trucks Actively Operated	Fleet Mileage	Through Total Ton-Mileage	Loading Capacity Per Cent	Operating Cost	Overhead Cost Cleveland Terminal	Total Operating Cost
April	6	12,066	32,483	78	$5,089.03	$654.28	$5,743.31
May	8	14,904	37,868	78	5,905.22	689.10	6,594.32
June	9	12,984	32,242	80	5,529.95	601.40	6,131.35
July	8	12,613	33,365	85	5,259.04	676.53	5,935.57
August	8	13,660	36,140	81	5,545.71	629.84	6,175.55
September	7	15,479	40,185	78	5,201.38	601.16	5,802.54
Totals	..	81,706	212,283	..	$32,530.33	$3,852.31	$36,382.64
Average	77	13,617	35,381	80	$5,421.72	$642.05	$6,063.77

Year 1919	Cost Per Mile	Cost Per Ton-Mile	Pay Loads Hauled, lb.	Revenue	Profit	Truck Efficiency Miles per Gal. Gasoline	Oil
April	$0.42170	$0.15670	1,450,704	$6,522.32	$ 779.01	...	...
May	0.39620	0.15590	1,864,235	7,962.70	1,368.38	...	...
June	0.42590	0.17150	1,674,669	7,099.30	967.95	...	...
July	0.41690	0.15760	1,733,570	7,620.46	1,684.89	...	...
August	0.40600	0.15345	1,684,181	7,331.67	1,156.12	...	...
September	0.33603	0.12940	2,083,383	9,371.69	3,569.15	...	...
Totals	.....	.....	10,490,742	$45,908.14*	$9,525.50	...	...
Average	$0.40045	$0.15409	1,748,457	7,651.35	$1,587.58	5.93	143.3

* Gross earnings, 51.9 per cent. on the investment, 26.2 per cent. on the operating cost.

Operating costs and efficiency of solid and pneumatic tire equipment are compared in the following tabulation:

COST AND EFFICIENCY OF SOLID VERSUS PNEUMATIC TIRE EQUIPMENT

Details	Pneumatic Truck Tires A-30	Solid Truck Tires A-33
Type, tons	3½	3½
Total travel, miles	7,054	6,548
Number of round trips	89	83
Average mileage per trip	79.3	78.5
Hauling, ton-miles	19,188	17,632
Loading capacity throughout, per cent.	77.7	76.9
Costs		
Gasoline	$268.99	$293.43
Oil	15.66	40.76
Drivers	357.20	357.20
Administration	81.66	81.66
Depreciation	252.53	439.37
Maintenance, material	63.48	171.53
Consumer's tire cost	830.96	394.19
Miscellaneous	7.50	17.00
Interest	64.94	59.56
Insurance	7.30	7.30
Rent	25.00	25.00
Total operating cost	$2,024.60	$1,980.13
Efficiency*		
Cost per mile	$0.2868	$0.3024
Cost per ton-mile	0.1055	0.1123
Oil, miles per gallon	332.0	140.7
Time per round trip, hours	4.3	5.6
Gasoline, miles per gallon	5.9	5.1
Truck speed, m. p. h.	18.6	14.3
Time saved, hours	115.7	.....
Driver's earnings—		
Straight time, 57.8 hours at $0.60	$34.68	.....
Overtime, 57.8 hours at $0.90	$52.02	.....
Saving on ton-mile cost	$130.48	.....
Net saving effected	$217.18	.....
Net gain by cost reduction, per cent.	10.7	.....

*Credit not allowed pneumatic-tired equipment for additional available hours over solid tires; increased satisfaction and better personnel of drivers, with less labor turnover, value to production in effecting quicker deliveries, additional safety and fewer claims for breakage in pay loads.

ADVANTAGES OF PNEUMATIC TRUCK TIRES

The numerous advantages of pneumatic tires for motor truck service are well summed up by W. E. Shively in The Journal of the Society of Automotive Engineers, October, 1920, from which the following is abstracted:

Discussion of the relative merits of pneumatic and solid tires must of necessity reduce itself to a comparison of the elasticity of

compressed air with that of rubber. We think of rubber as a very elastic substance, but it cannot be compared to compressed air in this respect. The reasons that motor trucks can be operated with any degree of success on solid tires are that they are operated at relatively low speeds and are built so heavy that they will endure the shocks and vibration to which they are subjected.

Two fundamental advantages result from the use of pneumatic tires on trucks, increased cushioning and increased traction. Increased cushioning is the most important factor, because it has a greater effect on the performance of the truck. The cushioning ability of a pneumatic tire is four times that of a solid tire of the same carrying capacity. As a result of this, six distinct advantages are gained from the use of pneumatic truck tires: (1) faster transportation, (2) economy of operation, (3) less depreciation of fragile load, (4) easier riding, (5) less depreciation of roads, (6) lighter weight trucks.

Transportation and Operation Economies

Faster transportation or quicker deliveries result from the increased cushioning of pneumatic truck tires because it is possible to obtain greater maximum and minimum speeds. Manufacturers of solid-tired trucks remove their guarantee if a speed of 11 or 12 m. p. h. is exceeded, while pneumatic-tired trucks are being operated at 20 to 35 m. p. h.

The following table shows the increased mileage economies obtained with pneumatic tires by four truck operators:

Details	Operators*			
	A	B	C	D
Truck capacity .....tons	2	3½	2	2
Period Months	6	1	5	4
Mileage on pneumatic tires	6,414	1,995	5,510	7,014
Mileage on solid tires	4,476	675	2,223	4,677
Miles per gallon of gasoline on pneumatic tires	5.77	5.75	7.21	7.70
Miles per gallon of gasoline on solid tires..	3.98	4.77	5.43	7.10
Miles per gallon of oil on pneumatic tires...	104.00	32.00	55.00	152.00
Miles per gallon of oil on solid tires	59.00	30.70	54.00	78.00
Cost per mile on pneumatic tires .....cents	45.00	31.30	21.50	27.70
Cost per mile on solid tires .....cents	56.30	55.00	24.00	31.00

*With a 2-ton truck for a 9-month period, a fifth operator obtained 9.1 miles per gallon of gasoline on pneumatic, and 6.1 miles per gallon on solid tires.

The economy of operating trucks on pneumatic tires has been shown by the experience of many users. There is a considerable saving in gasoline, oil and upkeep, the saving in oil consumption probably being due to the decreased vibration in all of the moving parts.

The upkeep or repair cost of a truck operated on pneumatics is much less than when operated on solid tires. It can be attributed to the decreased amount of vibration and the absence of severe shocks and jolts. The estimated saving is from 25 to 50 per cent. Regarding depreciation charges, as a result of experience, Goodyear solid-tired trucks are depreciated on the basis of 60,000 miles of service, while the pneumatic-tired trucks are depreciated on a basis of 80,000 miles. The 80,000-mile basis is probably too low, because there have been Goodyear trucks on pneumatic tires which at the end of 250,000 miles were still in good running condition. It is believed that in the near future trucks will be depreciated on the basis of 100,000 miles.

Depreciation of Loads and Roads

This is now considered by many to be one of the most important advantages. In hauling fragile materials such as bottled goods and eggs, there is very little, if any, breakage. Then there is the easier riding made possible by the use of pneumatic tires. In the case of delivery trucks, the elimination of the vibration makes it possible for the truck driver and his helper to ride almost continually without fatigue. This is of vital importance where it is necessary to drive for hours at a time. Easy riding is absolutely essential in passenger buses, from the standpoint of both comfort and speed.

Increased traction is made possible by the greater width of the pneumatic tires, their non-skid treads and their greater flexibility, which allow the surface of the tire to conform more nearly to the unevenness of the road, thereby getting a better grip. As a result of this increased traction, reliability and safety are obtained. By reliability is meant that it is possible for the truck to operate successfully over almost any kind or condition of road, and during all seasons of the year. By safety is meant that, because of the increased traction of the tires, the truck will hold the road better and the brakes will be more effective. This point has been thoroughly proved by the experience of many users of pneumatic truck tires. In traveling over the mountains along the Lincoln highway during the winter, this increased traction has saved both drivers and trucks from serious accidents on numerous occasions.

Cost of Pneumatic Tire Equipment

While it is true that the initial cost of truck pneumatic tire equipment is greater than that of solid tire equipment, it has been proved by experience that this difference is more than offset by the greater earning power and the lower costs of operation. It has usually been found

that in from four to six months the increased cost of the pneumatic-tire equipment is completely wiped out. When specially designed pneumatic-tire trucks make their appearance, this increased cost of pneumatic-tire equipment will be offset.

As to possible loss due to injury or abuse of the tires, it has been found that this is not a serious objection. There are many instances where pneumatic truck tires have run from 12,000 to 20,000 miles on the original air. Repair molds and retreading equipment are now in use in many parts of the country, and are being placed in other localities as rapidly as possible; so, it will be no more difficult to have a pneumatic truck tire repaired than any other part of the truck.

Practicability of Pneumatic Truck Tires

The practicability of pneumatic truck tires has been questioned probably more than anything else. The first thing to be discussed under this subject is that of delays due to changing tires. In the case of detachable rims, where it is necessary to remove the tire from the rim, replace it and then inflate it, it does not require more than 30 minutes to perform the entire operation. In the case of a demountable rim, a change can easily be made in 15 minutes. The average truck driver is not required to make a tire change more than once in three months.

Most garages and service stations carry sufficient air pressure to inflate tires up to 42 by 9-inch size, and many can take care of the larger sizes. By the time the largest tires are in general use, there will be sufficient air pressure to keep the tires properly inflated. Trucks equipped with detachable rims, or operating in long-distance or intercity service, are usually equipped with small air compressors. These trucks experience no difficulty in securing sufficient pressure. One objection, which is not mentioned so much now as when pneumatic truck tires first made their appearance, is the danger of the high inflation pressures. Pneumatic truck tires are made to withstand three to four times the pressure carried in them, so that this objection must be passed to the rims. These are made to withstand many times the pressure carried in the tires. If the rims are properly assembled, there is small chance of accident.

Regarding the rise in pressure caused by heating of the tire, these large tires have been operated under the most severe conditions possible and in no case has an increase in pressure of more than 35 pounds per square inch occurred. If the tires are made to withstand three to four times the pressure at which they are operated, it is hardly possible that this additional 35-pound pressure will cause them to blow out.

The large outside diameters of the tires are often objected to because they affect the truck ability and because they raise the center of gravity of the truck. In changing over a solid-tired truck to pneumatic tires, there is the possibility of reducing the ability of the truck. Experience has shown that unless the truck is operated over a very hilly route, its ability is not noticeably affected. Looking into the future, this question of truck ability and gear ratios will be taken care of by changes in design; so, the question of change-overs is only temporary. Raising the center of gravity of the truck is not as serious as it might seem.

Development of the Pneumatic Truck Tire

While the establishment of the pioneer Akron to Boston express perhaps was the turning point in the general adoption of pneumatic equipment on motor trucks, it was by no means new in 1917. In fact, the year 1908, nearly ten years earlier, marks the first efforts to develop a pneumatic tire suitable for truck service. The first tire produced was 38 by 6 size of fabric construction. In 1908, 1909 and 1910, quite a few of these tires were applied to fire apparatus where the need for pneumatic cushion seemed most necessary. These early tires were quite satisfactory on fire trucks where the runs were short and the service was not continuous.

Starting with the six-inch tire in 1908, tires of seven, eight, nine, ten and twelve-inch sections were developed within the next few years. All of these tires were of fabric construction. As in the case of the early six-inch fire-truck tires these other sizes did fairly well in the fabric construction for short hauls and intermittent service. But when they were used for long hauls and under severe conditions, it was found that the intense heat generated caused the tires of fabric construction to disintegrate too quickly.

Large Cord Construction

Now came an improvement of scarcely less significance than the adoption itself of the pneumatic tire. The principle of cord construction developed steadily through the years, was made practical for the more powerful gasoline passenger cars, and pointed to the possible solution of the problem of pneumatic tires for trucks.

Finally the development of the cord tire was merged with the pneumatic truck tire in 1916 and the cord pneumatic truck tire was produced. This tire stripped away the limitations of the fabric type and made possible the use of pneumatics in the most severe service, as proved in the 1,500-mile round trip between Akron and Boston.

Sizes and Capacity

Since the introduction of the pneumatic cord truck tire in 1916, and its thorough demonstration in 1917, the use of pneumatics has expanded rapidly. All tire manufacturers have adopted as standard the final S. A. E. sizes developed in 1914, including the 36 by 6, 38 by 7, 40 by 8, 42 by 9 and 44 by 10, accommodating all trucks up to 3½

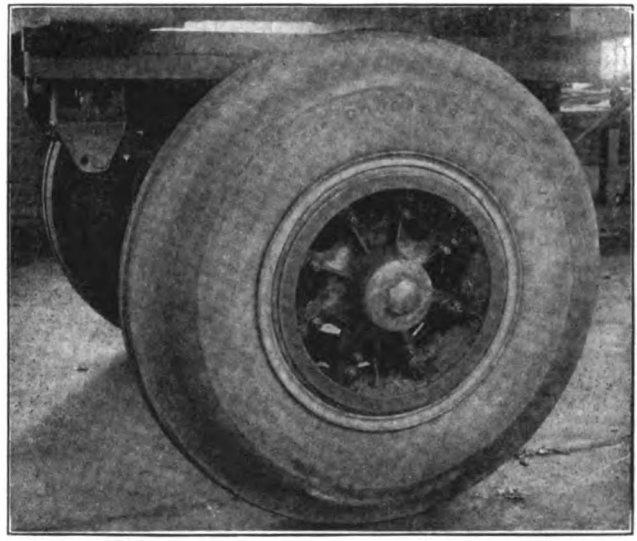

From "The Journal of the S. A. E."

12-Inch Cord Truck Tire on Rear of Trailer

tons capacity. A 48 by 12 Goodyear cord tire is also made for five-ton trucks. The following table indicates the inflation and capacity of the various standard sizes:

Loads and Inflation

Rim Sizes, In.	Normal Tire, In.*	Oversize Tire, In.†	Extreme Maximum Allowable Load per Tire (Cord), Lb.	Inflation Pressure Lb. Per Sq. In.
34x5	34x5	36x6	1,700	80
36x6	36x6	38x7	2,200	90
38x7	38x7	40x8	3,000	100
40x8	40x8	42x9	4,000	110
40x8	42x9	....	5,000	120
44x10	44x10	....	6,000	130
48x12‡	48x12	....	8,500	140

*Original equipment on new trucks.
†Not for original equipment; only for consumer's convenience.
‡Not yet standard with S. A. E. practice.

There is no oversize possibility for 9, 10 and 12-inch sizes, because the oversizing plan falls down above the 9-inch size, on account of the size and stiffness of the beads as designed at present.

Loads and Inflation

Flexing breaks down a tire, when run under conditions which produce a deflection in the tire of 12 to 15 per cent. of the section diameter, or the height above the rim. The deflection can be controlled by regulating the load or the pressure, or both. The standard maximum loads and inflation pressures in the table above are practical to maintain. the tires are built accordingly and satisfactory results in first cost and mileage delivered are obtained if they are used.

These tires are built the same as cord tires for pleasure cars except for greater thickness and strength, there being from 10 to 16 plies of woven cord fabric according to the size of the tire. They have the same non-skid treads, a steady tire on the road being an important factor in successful motor transportation. These tires carry a five to seven-ton load with no more damage to the road than that caused by an ordinary touring car, and as they also do it quietly they have greatly lessened the public antagonism that has been directed against the use of heavy solid-tired trucks on state roads.

Thus, through some twelve years of development work, there has been provided for the truck industry and the public an improvement which bids fair to revolutionize motor truck transportation throughout the world. The cord tire has demonstrated that its great cushion and traction will enable the motor truck to do things heretofore impossible on solid tires. It is opening up new fields of usefulness for the motor truck, and well informed men now look for a more rapid development in the truck industry than we have had in passenger cars, now that trucks can enjoy the same tire advantages that passenger automobiles have had.

For vehicles up to 1,500 pounds capacity, inclusive, pneumatic tires should be used except under very rare conditions. Vehicles of 2,000 to 3,000 pounds capacity are being rapidly changed to pneumatic equipment in the large majority of cases, due to the development of the cord tire. A considerable percentage of the new 2 to 2½-ton vehicles will probably be placed on pneumatic equipment when the subject has been more clearly demonstrated and design changes which may be found necessary have been made.

In fact, trucks of the lighter models from ¾ to 2½ tons, and also heavier models used for special purposes, are already being extensively equipped with pneumatic cord tires. They are being used by

wholesale grocers, dry goods and general merchandise stores, department stores, commission houses, candy manufacturers, etc., and especially for carrying produce, foodstuffs, eggs, furniture, pianos, glassware and all fragile materials; for trucks operating at a high rate of speed over rough city pavements or country roads; and for passenger carrying buses, sight-seeing cars, fire apparatus and other public service vehicles.

A limiting factor of the preceding statement is to be found in the character of roads on which pneumatic equipment is operated, and the freedom of the roads from litter of scrap metal, glass, etc.

The modern cord tire, however, is excellent for operation on almost every kind of road. The structural strength of these tires renders them less susceptible to injury from stone bruises, etc., when operated on rough roads, if the proper inflation pressures are used, than the fabric type. The traction is so much greater than that of solids, and the types of tread which have been developed are of such great assistance that trucks can be operated in sand, snow, mud and on wet surfaces where solid tired trucks would be stalled. In consequence, with these advantages, it is safe to say that the pneumatic tire will compare favorably with the solid tire under almost every condition of road.

Factors Governing Change-Overs from Solid to Pneumatic Tires

A word of caution may well be included here, however, regarding indiscriminate change-overs from solid to pneumatic tires without the advice of a recognized tire expert, for there is reason to doubt whether many truck owners understand that such a change-over is not always satisfactory and may even be harmful to their trucks. Most people regard tires as accessories which have little influence on the structural design of the vehicle, but automotive engineers know that the tires determine the general characteristics of the vehicle they are to carry.

A truck designed for pneumatics differs radically from one built for solid tires, and it is because most trucks are designed for operation on solids that truck users may find pneumatics unsuited to their requirements. All except a few of the motor trucks in operation to-day were built from engine to rear axle along lines which would make them adaptable for use on solid tires. In designing these trucks, the sole object of the engineers was to secure the highest efficiency of operation possible under the limitations imposed by the natural characteristics of solid tires.

The first trucks designed for solid tires were lighter than those in use to-day, but the vibration caused so much breaking of parts that they have been strengthened and reinforced repeatedly. This can all

be saved by using pneumatics, permitting lighter chassis and bodies to carry heavier loads.

A small number of firms build trucks especially for pneumatics, but the number of makes of this sort is very limited. The number will undoubtedly grow rapidly, for the advantages of having a truck ride swiftly and on air so apparent that the demand for trucks designed for pneumatics cannot help but become very great in the immediate future.

Truck and tire engineers are now working together to solve the problem of faster highway transportation and the solution is found in a truck specially designed to operate on pneumatic tires, having a chassis corresponding to that of a passenger automobile, an engine which will drive the vehicle at high speeds and still show the necessary economy in gasoline and oil, a rear axle and differential gears which will compensate for the larger outside diameter of the tires, and a braking system that is powerful enough to give the driver complete control of the heaviest truck under all conditions.

Tire Equipment Depends on Truck Service Capability

If a truck designed for solids is changed over to pneumatic tires, the increased cost of this equipment can be most easily offset by increasing the radius of action; that is, increasing the speed. While the tires are designed for this, the engine, transmission, differential gears and brakes are not. The truth of the matter is that there are certain circumstances under which it is wise for a truck owner to change over from solids to pneumatics, even though the truck construction contemplates the use of solids. There may be certain disadvantages as a consequence of the change, but these may be more than offset by certain advantages to be gained through use of the pneumatics.

The change should not be made, however, until the truck owner has satisfied himself that pneumatic tires are more suitable for his particular needs.

The proper tire equipment for a commercial vehicle depends entirely on the service in which it is used. No one tire can best meet all conditions. In many cases pneumatic tires afford distinct advantages —even on the heaviest trucks. In transporting fragile material, vibration may damage the load, but such materials properly packed are not harmed in transportation by trucks equipped with pneumatic tires. On large sight-seeing cars, where easy riding must be provided, pneumatic tires are growing in favor. Fire apparatus, which must travel at high speeds, usually over rough streets, often suffers unduly from wear and tear without the cushioning qualities of the pneumatic tire.

Mounting Pneumatic Truck Tires

Being larger and heavier, and having stiffer beads, cord truck tires require greater strength and heavier tools in applying them to the rim than ordinary pneumatic tires. In this connection it should be understood that cord truck tires are built only in the straight-side type for detachable rims. In the main the accepted method of applying tires on passenger cars is applicable in fitting the larger sizes on motor trucks. There are, however, some exceptions which are worth noting.

In mounting a passenger car tire it is customary first to insert the tube in the valve stem hole of the rim, then to pry the tire over the rim. With the pneumatic truck tire this method cannot be followed owing to the stiffness of the beads and the width of the rim.

The tire is laid squarely on the rim with the valve stem directly over the hole in the rim. Then the tire is allowed to drop down evenly, pressing the valve stem down sidewise and toward the end of the flap and holding the valve stem in this position with a thin steel bar.

When the tire is completely on the rim it can be readily turned from one side to the other until the valve stem appears at the hole, and can be pulled through. Then the side ring is ready to be slipped into place all around the tire, after which the locking ring will fit into its channel, holding the tire securely, ready for inflation.

Inner Tubes, Flaps and Valves

Great attention has been given to the construction of special inner tubes for these giant tires because of the considerable pressure of inflation, the heavy loads for which they are designed and the rough service under which they are expected to stand up. They are of the laminated type, thin sheets of gum rubber being built up layer upon layer until the proper thickness is obtained, which is considerable. The object of this construction is to avoid the formation of blisters, air-holes and other defects that sometimes are difficult to avoid in tubes of ordinary construction.

Tubes for pneumatic truck tires must be designed and compounded to retain as much of their original strength and shape as possible, after being subjected in service to more or less heat and continued flexing. The tube has presented one of the most difficult problems in connection with large tires, but the problem has been solved partly in a mechanical way by building the tubes thick, shaped like the tire, and so they are stretched very little in the tire. Proper rubber compounding has been a still more important factor. Tubes are on a par with casings in development and render satisfactory service even in the largest sizes.

Flaps assume considerable importance in tires inflated to the pressures recommended for truck tires. It is important that the flap should fit well, so there will be no adjustment of the flap when the tire is inflated, causing a localized stretch in the tube at the edge of the flap.

The valve question had to be approached first from the standpoint of holding air at pressures from 90 to 140 pounds per square inch and, second, from the standpoint of ease of tire change. The valve insides on all 6-inch and larger tubes is of a heavy-duty type, different from the ordinary valve insides in construction, but the two are interchangeable in any valve stem. On the 10 and 12-inch sizes, which inflate to 130 and 140 pounds per square inch respectively, even the heavy-duty type is unsatisfactory when used alone; so, a combination is used in the form of a heavy-duty valve inside and a needle-valve operated by a hand screw.

As to the relation of the valve to easy tire changing, it is customary in applying the small-size tires to insert the valve in the hole in the rim and tip the tire on the rim. This necessitates considerable clear-

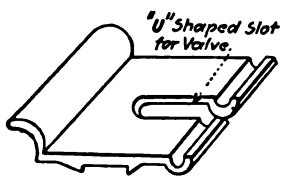

The Journal of the S. A. E.

SLOTTED RIM

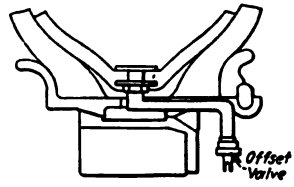

OFFSET VALVE

ance in diameter of the tire beads over the rim and, in 7-inch sizes and above, such design is impractical because the rims are wide and would necessitate too much clearance in bead diameter.

It is therefore necessary, if a straight valve and the usual valve hole is used, to push the valve up into the tire, fit the tire on the rim and then fish the valve through the valve hole. To avoid this difficulty, some steel wheels are made with a U-shaped slot from the edge to the center of the rim, which permits the tire to go on the rim with no difficulty at the valve. It is believed that an offset valve with two right-angle beads in it will eventually be used. The offset valve requires only a depression in the rim from the edge to the center, and not a slot. The wheel is stronger than if slotted, and besides making application just as easy, the valve comes out at the edge of the rim and is more accessible to inflate.

Cord Tires for Airplanes

In the early days of aviation all sorts of makeshifts were resorted to. Bicycle and motorcycle tires of fabric construction were first employed on some of the pioneer machines, but they proved costly and uncertain.

Later, as much larger and heavier machines were constructed to carry more passengers and heavier loads, some builders even went so far as to use full-size automobile tires. The latter answered so far as reducing the shock of landing was concerned, but were far too heavy and offered too much wind resistance.

The development of special tires to fit the peculiar requirements of aviation began about 1910. It was soon discovered that great resiliency is a very important factor and that a live, springy tire not only helps to absorb the shock of landing but actually aids the machine to get off the ground at the beginning of a flight — considerations of prime importance to both the flyer and his machine. The need of security against punctures and blow-outs was also appreciated. As the superior resiliency of cord tires for motoring had become recognized and the success achieved by this type of tires in automobile track races had demonstrated their dependability, experiments were made with cord tires in aviation, with the result that cord tires for airplanes have been refined to a point of efficiency equal to that of cord tires for gasoline and electric automobiles.

In high altitude flying the greater strength and lower required inflation of cord tires also becomes a factor. It seems strange to think of an airplane tire blowing out in mid air, but this sometimes happens. At altitudes of ten to twelve thousand feet or more the air pressure is low, and if the tires on the plane are weak or inflated too much they will blow out because there is not enough resistance outside to counterbalance the air pressure inside.

The Palmer was probably the first tire of cord construction to be used for aviation purposes in England, and it has ever since held a prominent place among airplane tires.

In America The B. F. Goodrich Co. in 1910 introduced as a regular product an airplane tire which in construction was a modification of the Palmer bicycle tire. It was smaller than a bicycle tire in diameter, but of larger cross section, being 20 by 2 and 20 by 2¼ inches. Buoyancy and strength were the qualities sought in its construction. About the same time the Continental Rubber Works was making airplane tires in these same sizes and also 20 by 3 inches. The Pennsylvania, Goodyear and Hartford companies were offering

airplane tires 20 by 4, 26 by 2½, 28 by 2½, 28 by 3 and 28 by 3½ inches and weighing 6½ to 8¾ pounds each, the former company featuring leather as well as rubber treads. Clincher double tube tires soon became the rule, although some of the earlier machines had single tube tires and some special wired base tires were brought out for Dunlop-Welch rims. Two of the 20 by 4 tires were said to be capable of carrying a 1,000 to 1,200-pound flyer.

In airplane design everything possible must be done to reduce wind resistance to the minimum. As is was found that the landing wheels offered a small amount of resistance to the air passing through the spokes, windshields for airplane wheels have been developed to cover

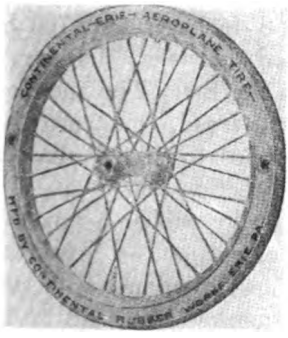

AN EARLY AEROPLANE TIRE

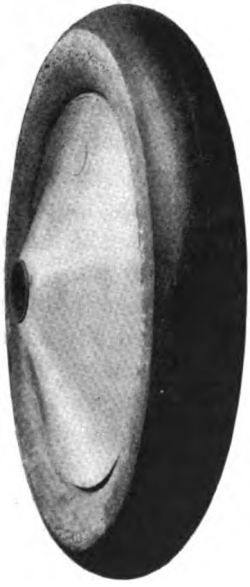

GOODRICH AIRPLANE WHEEL AND WINDSHIELD

GOODYEAR AIRPLANE TIRE

the hub and spokes. They are made of rubberized fabric and can be readily adjusted or removed from the wheel as desired or required. The construction is such that the air particles glance off with as little interference as possible with the revolution of the wheel. Incidentally the noise caused by the wheels spinning when the machine is flying is also eliminated.

Tires combining extreme lightness with toughness and resiliency are thus seen to have been the early desideratum, but, with heavier and more powerful machines, maximum cushioning ability to resist

the lateral thrusts that occur when an airplane side-swipes the earth in landing, became fully as important as light weight, so that large cross-section was essential. As early as 1909 Palmer cords had been made up to 7-inch cross-section, and in 1915 a new Goodyear airplane cord tire was brought out in America to meet this need. It was a 26 by 4 clincher with a carcass consisting of four to six cord fabric layers. Since that time developments have been rapid, owing to the impetus of war, and various companies have been producing airplane tires of even larger diameter and cross-section as the needs of the Government have advanced.

Probably the largest pneumatic tires made for any purpose are those with which the famous Handley-Page airplanes of the British Government are being equipped. They are Palmer Cord Aero Tires 1,500 by 300 mm. (59 x 11.8 inches), or approximately five feet in diameter and one foot in cross-section, and greatly exceed all regulation pneumatic tire sizes for either airplanes or motor trucks.

The 1918 S. A. E. specifications for United States Government airplane landing wheels specify four sizes, the largest of which is 800 by 150 mm. (32 by 6 inches); the others being 750 by 125 mm. (30 by 5 inches), 700 by 100 mm. (28 by 4 inches), and 700 by 75 mm. (28 by 3 inches). It was anticipated, however, that larger sizes would probably be required and added to the list. The specifications call for tires of the clincher type, smooth tread, constructed of two or more cord plies of long-staple cotton, so arranged that an equal number of plies run in each diagonal direction across the tire, each ply being separated from the adjoining ply by rubber compound. Even the giant cord pneumatics now being turned out by American manufacturers are dwarfed beside these Palmer airplane tires, the largest pneumatic truck tire regularly on the market being 48 by 12 inches.

That these giant tires are needed becomes evident on considering the size and weight of the Handley-Page airplane. Its wing span is 126 feet, the width of the span is 12 feet, and the length of the fuselage is 65 feet. Equipped with a 350 h. p. Rolls-Royce engine and known as the "Berlin Bomber," it weighs 15 tons fully loaded, over 5 tons of which is useful load.

This type of machine represents the maximum achievement in heavier-than-air flying during the war, and now promises to be used extensively in commercial aviation, as it is able to carry, for example, a five-ton load of passengers, mail, or merchandise in a non-stop flight equivalent to the distance between Boston and St. Louis, in twelve

hours. It will be recalled that one of these great airplanes flew from Ipswich, England, to India, a distance of 5,800 miles, and covered 700 miles of the distance over the Mediterranean, which was a record flight for a land machine flying over water.

It is a far cry from the frail airplane wheels and small tires of 1910 to these giant wheels and Palmer cords with their canvas shields to prevent wind resistance to the turning of the wheel as a result of cross drafts through the spokes, but as the development of aviation has been phenomenal and revolutionary, so also has been the achievement in tire building. Indeed, the latter has been a big factor in making the former possible. But for cord tire construction, the airplane

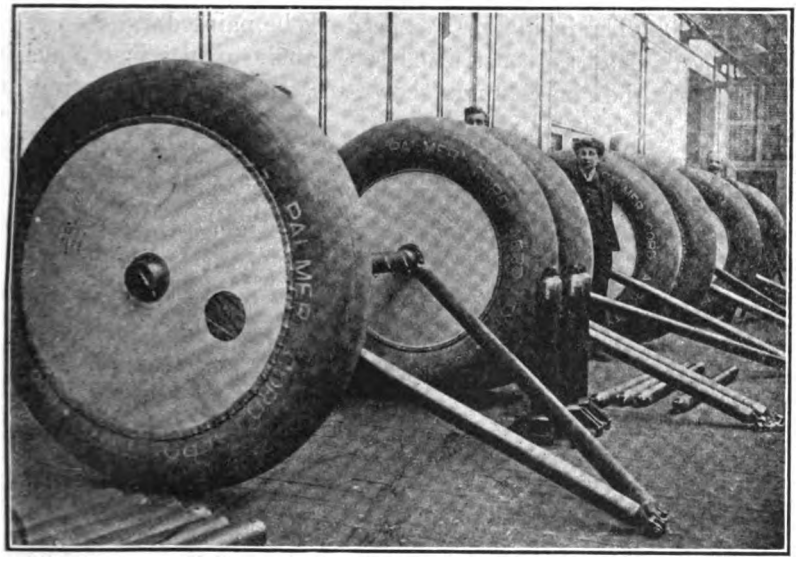

(c) Underwood & Underwood, N. Y.

TIRE EQUIPMENT OF THE "BERLIN BOMBER"

might not be what it is today, and it is a matter worthy of more than passing mention that the Palmer tire, the pioneer in its class, still heads the list of progress.

S. A. E. SPECIFICATIONS FOR AIRPLANE TIRES

Considerable progress has been made in the standardization of airplane tires by the Tire and Rim Division of the Society of Automotive Engineers in conjunction with United States Government experts.

The specifications, as submitted below, cover the general requirements of tires and tubes for airplane landing-wheels, it being the aim

to confine the number of sizes to as few as possible. Larger sizes than listed below will probably be required, and the proposed specification will be extended to include these sizes as soon as demanded.

All tires and tubes shall be free from defective material and workmanship, and shall conform to the following general construction, limits and tests:

Tires shall be of the clincher type, smooth tread, constructed of two or more cord plies of long-staple cotton, so arranged that an equal number of plies run in each diagonal direction across the tire. Each ply shall be separated from the adjoining ply by rubber compound. Enough rubber compound must be put on side wall to insure ample protection of tire body. The tread stock shall have a minimum specific gravity of 1.30. The inside of tires need not be painted.

Tire beads shall be constructed so as to insure against punching and fit properly the rim contours shown in accompanying drawing and table.

The dimensions and weights of the finished tires shall be according to the following table and within the limits specified:

TIRE DIMENSIONS AND WEIGHTS

	Size		Dimensions Thickness		Weights	
	Tire	Rim No.	Tread Min.	Side-wall Max.	Max.	Min.
Millimeters	75/700	U†	1.588	0.794	2.410 kg.	2.123 kg.
Inches (approx)	28x3		1/16	1/32	5 lb. 5 oz.	4 lb. 11 oz.
Millimeters	100/700	Z*	2.381	1.191	4.137 kg.	3.851 kg.
Inches (approx)	28x4		3/32	3/64	9 lb. 2 oz.	8 lb. 8 oz.
Millimeters	125/750	Z*	2.381	1.191	4.989 kg.	4.650 kg.
Inches (approx)	30x5		3/32	3/64	11 lb. 0 oz.	10 lb. 4 oz.
Millimeters.	150/800	Z†	3.175	1.191	6.002 kg.	5.615 kg.
Inches (approx)	32x6		1/8	3/64	13 lb. 4 oz.	20 lb. 6 oz.

Marking.—Each tire shall be branded with the manufacturer's name, size, serial number, and rim number the tire is intended to fit.

TUBE MEASUREMENTS AND WEIGHTS

	Tire Size	Mandrel Diam. Min.	Wall Thickness, Min.	Weight‡ Approx.	Specific Gravity, Max.
Millimeters	75/700	47.63	1.194	0.4536 kg.	1.25
Inches (approx.)	28x3	1⅞	0.047	1 lb. 0 oz.	1.25
Millimeters	100/700	60.33	1.372	0.6804 kg.	1.25
Inches (approx.)	28x4	2⅜	0.054	1 lb. 8 oz.	1.25
Millimeters	125/750	76.20	1.575	0.9355 kg.	1.25
Inches (approx.).....	30x5	3	0.062	2 lb. 1 oz.	1.25
Millimeters	150/800	82.55	1.575	1.1911 kg.	1.25
Inches (approx.)	32x6	3¼	0.062	2 lb. 10 oz.	1.25

*Section widths and tire dimensions when inflated 50 pounds per square inch shall not vary more than four per cent. over or more than two per cent. under nominal specified tire sizes.

†Weight without flap.

‡It is suggested that the maximum and minimum weights be specified for tubes as well as for the tires.

Tubes. Tubes shall be constructed of rubber compound to dimensions, weights and tolerance given in table, and shall withstand physical tests specified.

Tube Tests. Tubes must withstand the water test mentioned under tire test, and shall have the following physical properties:

Minimum tensile strength	1,500 pounds
Minimum stretch	600 per cent.
Maximum set (two minutes after rupture)	25 per cent.

Valve. The valve to be used will be of the bent type with adapter for American and foreign pumps.

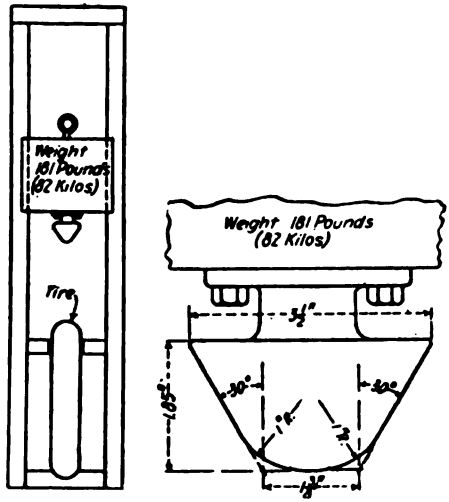

IMPACT TEST FOR PNEUMATIC TIRES

[General arrangement of apparatus shown on left. Detail of contact head shown on right]

TIRE AND TUBE TESTS COMBINED

The manufacturer shall make a sufficient number of tests on the tires and tubes coming through to satisfy himself that the product satisfies the requirements of this specification.

IMPACT TEST

The tire is mounted with the tube on a special rim of standard contour that will withstand the pressures given in the table. The tube is inflated with air and maintained at a pressure of 150 pounds per square inch. In this condition the tire must withstand a blow delivered

on the tread by a weight of 181 pounds (82 kilograms), having a contact surface as indicated in the diagram, and falling through the distance indicated in the following table:

Tire Size, Mm.	Drop (181 Pounds Weight) In Inches	In Mm.
75/700	45	1143
100/700	55	1397
125/750	55	1397
150/800	55	1397

Water-Pressure Test. All airplane tires from 75/700 to 150/800 millimeters inclusive, when mounted on special rim, standard contour, shall withstand a water test of 200 pounds, pressure not to be raised at a rate exceeding 50 pounds per minute.

Side-Thrust Test. All airplane tires from 75/700 to 150/800 millimeters inclusive, when mounted on standard rims, inflated to 50 pounds air pressure, and loaded with a dead weight of 2,000 pounds,

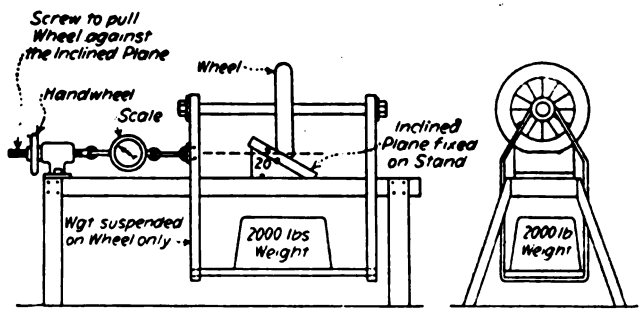

AIRPLANE LANDING WHEEL SIDE-THRUST TEST

[The center line of the screw (line of pull) should come at the point of contact of the tire with the inclined plane]

shall withstand 1,800 pounds lateral stress against a surface placed at an angle of twenty degrees with the horizontal, as shown in the illustration, without pulling off the rim.

GOVERNMENT SPECIFICATIONS FOR CORD TIRES

The details of standard cord tire construction are well shown by the United States Government specifications prepared and approved by the Motor Transport Corps of the United States Army, the War Service Committee of the Rubber Industry, and the Special Board of Officers, convened under paragraph 30, S. O. 91, W. D., 1918, and which were finally revised and published November 1, 1918.

Specification Nos. 1068A., 1069A., 1070A., 1071A., and 1072A. cover ribbed or non-skid pneumatic automobile casings in sizes 33 by 4, 35 by 5, 36 by 6, 38 by 7, and 40 by 8 respectively, and have been combined into one specification as follows:

1. *General.* (a). Pneumatic automobile casings manufactured in accordance with this specification shall be of cord construction, of the sizes known to the trade as 33 by 4 inches, 35 by 5 inches, 36 by 6 inches, 38 by 7 inches, and 40 by 8 inches.

(b) Casings must be designed to carry the following loads for these sizes respectively: a load of 815 pounds when inflated to 65 pounds per square inch; 1,500 pounds at 75 pounds pressure; 2,000 pounds at 90 pounds pressure; 2,700 pounds at 100 pounds pressure and 3,650 pounds at 110 pounds pressure.

(c) The manufacturer of casings must guarantee them to be free from defects in material and workmanship.

(d) Casings shall be plainly marked with manufacturer's name, serial number and size of tire.

(e) As soon as possible, it is desired that all casings be marked with the equivalent metric sizes as recommended by the Society of Automotive Engineers.

2. *Type.* All casings manufactured in accordance with these specifications shall be of the manufacturer's standard non-skid or ribbed (as ordered) straight-side type designed for the standard S. A. E. straight-side rim of the following sizes respectively: 32 by 3½ inches and the new size 33 by 4 inches; 34 by 4½ inches; 36 by 6 inches; 38 by 7 inches, and 40 by 8 inches.

3. *Construction.* (a) Carcass of casing shall consist of not less than four nor more than eight, ten, twelve, fourteen and sixteen separate plies of cord, according to the respective sizes, applied in such a manner that an equal number of plies shall run in each diagonal direction across the casing.

(b) All cord materials to be of the best quality combed Sea Island or Sakellarides cotton or their physical equivalent as approved by the Government.

(c) All cord fabric must be thoroughly dried according to standard manufacturing practice before it is started through the operation of rubberizing.

(d) The usual methods of inspection used by tire companies in commercial practice to discover defects in each roll of cord fabric shall be employed, and tests to determine tensile strength of cords shall be made on ten individual cords taken from each roll.

The results shown must be up to the standard specification of the individual manufacturer.

(e) Two chafing strips of fabric, weighing not less than eight ounces per square yard for the three smaller sizes, and not less than twelve ounces for the two larger sizes, shall be used on each side of the casing. Each chafing strip shall extend upward on the side of the casing from the heel of the bead, according to the tire size respectively as follows: not less than 1 inch; 1⅛ inches; 1½ inches; 1¾ inches, and 2 inches. One chafing strip shall extend at least 3/16-inch above the other.

(f) There shall be a cushion of rubber compound applied over the cords which shall be wider than the breaker. The minimum gage of this cushion shall be according to the respective tires sizes: 0.050-inch; .0625-inch; .080-inch; .080-inch; and .090-inch.

(g) Over the cushion there shall be at least one breaker strip of open weave fabric such as is used in standard commercial practice, coated on both sides with a rubber compound having the physical and chemical properties of a nature to form a perfect union between the cushion and tread when the cure is effected. This breaker strip shall have a minimum width, according to the respective sizes of 2¾ inches; 3½ inches; 4¼ inches; 5½ inches and 6½ inches. Breaker shall be made from long-staple Egyptian cotton or its physical equivalent as approved by the Government and shall weigh not less than ten ounces per square yard for the three smaller sizes and not less than eighteen inches for the two larger sizes.

(h) The tread of the casing shall not be less, according to respective size, than ⅜-inch; 7/16-inch; 9/16-inch; ⅝-inch, and 11/16-inch thick in the center; ⅛-inch, 3/16-inch, 7/32-inch, ¼-inch and ¼-inch respectively, which shall be the minimum thickness for that part of the tread under the middle of the non-skid portion.

(i) The sidewall of the casing shall have a minimum thickness of 0.0625-inch.

4. *Physical Measurements and Tests.* (a) Cross-sectional diameter of each tire inflated according to the recommended weight and load schedule of the S. A. E. shall be not less than the following respectively according to size: 4.2 inches; 5.4 inches; 6.3 inches; 7.35 inches; 8.4 inches.

(b) Tires shall be capable of withstanding water pressure of 350 pounds per square inch without apparent injury. This test is to be made at the discretion of the inspector.

(c) The minimum strength of the casing shall be as follows, according to the relative sizes: 2,000 pounds; 2,500 pounds; 3,000 pounds; 3,500 pounds and 4,000 pounds. This "strength factor" is the product of the number of cords per inch measured at the tread at right angles to the cords multiplied by the strength of the individual cord as taken from the cord tire multiplied by the number of plies.

(d) The strength of the union between breaker and tread and between breaker and cushion shall be not less than 32 pounds per inch, using the standard dead weight friction test as provided in paragraph No. 4, fabric casing specifications.

(e) Strength of the union between sidewall and plies shall average 14 pounds or more per inch, using the standard dead weight friction test as above provided.

(f) Strength of the union between cushion and plies shall average 16 pounds or more per inch, using the standard dead weight friction test as above provided.

5. *Road Test.* Manufacturers bidding on government requirements must meet the following conditions:

(a) Casings will not be given consideration unless the maker submitting the bid furnishes an affidavit stating that he has maintained and will continue to maintain at least two cars used exclusively for test work, and that these cars average at least 1,000 car miles per car per week for the two smaller sizes and 500 car miles for the three larger sizes.

(b) The speeds, loads, tire sizes, inflations and road conditions must be such that the casings are properly tested. The Government may appoint an inspector to see that the above conditions are complied with.

(c) A bidder must supply an affidavit before delivering any casings to the Government, stating that the casings to be delivered are the same cross-section and practically duplicate, in construction and material, casings which he has previously tested in accordance with paragraphs (a) and (b), and that a sufficient number of casings satisfactory to the Government, not less than six for the two smaller sizes and four for the three larger sizes, have averaged on the rear wheels at least 5,000 miles.

6. *Lining.* The inside of each casing shall be properly lined in accordance with the standard practice of tire manufacturers.

7. *Flaps.* A flap shall be furnished with each casing, as in standard commercial practice.

8. *Compounds.* (a) Tread. The tread shall be made from and have the characteristics of a compound containing at least 70 per cent. of volume of the best quality new wild or plantation rubber. The minimum tensile strength shall be 2,400 pounds to the square inch, with a minimum elongation of 500 per cent. (2 to 12 inches) as determined by the average of four test pieces when stretched at the rate of 20 inches per minute. The test pieces shall be cut longitudinally and shall be ¼-inch wide over a gage length of two inches, the ends being gradually enlarged to a width of approximately one inch. The permanent set, determined by the average of four tests with test pieces as above, shall not exceed 25 per cent. after an elongation of 400 per cent. (2 to 10 inches) for ten minutes, followed by a rest of ten minutes. All tests shall be made at a temperature between 65 and 90 degrees F.

(b) *Friction and Cushion.* These shall be made from and have the characteristics of a compound containing at least 85 per cent. by volume of the best quality new wild or plantation rubber.

(c) *Sidewall.* The sidewall shall be made from and have the characteristics of a compound containing a minimum of 65 per cent. by volume of the best quality new wild or plantation rubber. The compound shall have a minimum tensile strength of 1,500 pounds per square inch and a minimum elongation of 450 per cent. (2 to 11 inches). The permanent set shall not exceed a maximum of 25 per cent. tested as specified in 8 (a).

(d) All above test pieces must be cut from casings.

(e) The above compounds shall be free of ingredients known to the rubber trade as oil substitutes and/or reclaimed rubber.

9. *Inspection.* The Government reserves the right to make any inspection, test or analysis necessary to insure the product meeting all requirements of this specification.

10. *Wrapping and Marking.* All casings shall be spirally wrapped according to standard practice and properly labeled on the outside, showing the size and type, and name of manufacturer. A label with the month and year of manufacture stamped on it shall be pasted in a conspicuous place.

11. *Packing.* Packing shall be as per specifications accompanying the request for bid.

CHAPTER XIII

BIAS FABRICS

Cutting Bias Fabric Strips

THE tire fabric after being rubber coated by calender, spreader or impregnating machine is cut into bias strips of proper widths so that the edges will extend from bead to bead over the crown of the tire.

These strips were formerly cut on a zinc topped table about 50 feet long and six feet wide. The cutting was done by two men, each having a knife and each cutting half way across the cloth along the edge of a straight edge so arranged as to be always set at 45 degrees with the edge of the table.

This method has been generally put aside for the bias cutter, a machine having jaws which automatically pick up the end of the fabric and pull it for a certain distance under a knife at a 45-degree angle, the knife being set to cut just when the jaws have arrived at the limit of their motion. The action is repeated so that the machine cuts about eighty strips a minute.

These strips are fed upon a series of endless belts which carry them to where they are placed on either side in a book having a leaf of cotton cloth between the strips of fabric, to prevent the strips from sticking together.

Many automobile tires are still built by the hand method, and for this process the books of fabric are delivered to the fabric joining room where they are spliced or sewed together by hand on convenient benches into proper lengths to go around the core and allow a suitable lapping of the splices. Each splice is carefully laid of definite and uniform width and the edges of the joint are taped with narrow rubber strips to fill the angle of the overlap. As the work of splicing proceeds, the proper number of these laid-up pieces, or plies, as they are called, are placed together with a cotton cloth liner of convenient size for use on the tire building machine laid between, and are rolled up and taken to the tire builder.

For building tires by the machine method some bias fabric cutters have reeling devices which avoid the use of muslin books, the strips being caught as they fall from the cutters by traveling liners and wound up with them into a compact roll. One device splices the ends together and forms continuous strips.

Jappe Elastic Fabric for Tire Building

For the purpose of at once avoiding waste and rendering elastic the splice formed by joining bias-cut strips of frictioned fabric for making tires and similar articles, the simple device of slitting the

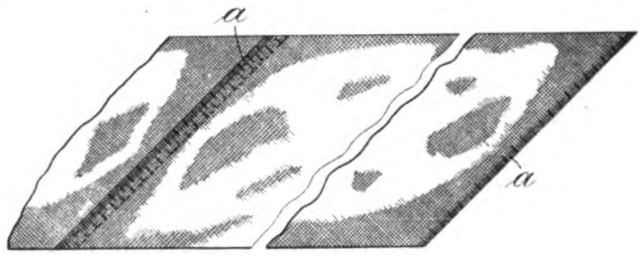

Jappe Tire Building Fabric

selvages of the fabric at frequent intervals has been patented. The result is that such a selvage edge bias splice is as elastic as any other portion, the joint is less bulky and all waste is eliminated.

BIAS FABRIC CUTTERS

Schofield Bias Fabric Shear

This was the pioneer machine in bias fabric cutting. In use the tire fabric is stripped from the roll, fed to the machine, cut and dropped on a table, or carried by conveyor far enough to be picked up and put into books.

The knives are 75 inches long, and will cut up to 52-inch fabric on a 45-degree angle. The width of the strip between, and at right angles to the cut, can be regulated at will, from 6 up to 36 inches. A five-step cone pulley drive is provided, giving as a minimum 10 to 12 strokes on the long cuts, increasing in number as the cuts are shorter. Within reasonable limits the cutting speed may be increased to any point at which the cut strips can be economically handled. An unusual feature of the machine is its swinging upper knife, which adjusts itself to the cut. The lower blade is firmly fixed to the bed and the upper one is swung from a horizontal shaft by two freely moving bearings. The blades are set at an angle, not only vertically, but also horizontally in such a way that the cutting edges make an angle in the horizontal plane; that is, the cutting edges of the knives cross each other. This confines the cutting to one point so that the action is precisely like that of a pair of hand shears; the cutting is clean and free from pulling. The tendency of the knives to self-sharpen keeps the cutting edges in good condition for a long period.

The feeding is accomplished by a sliding bar having on it a set of gripping fingers which reach in and under the top knife, taking hold of the newly cut edge and drawing the material forward until released by a cam. This sliding bar can be changed to five different strokes or lengths of travel, and the release cam can be adjusted to any desired point between each stroke, thus regulating the width of the cut fabric to any point between 6 and 36 inches.

For coated fabric there is a stripping device, driven from the countershaft, which takes the form of a friction let-off with a pair of

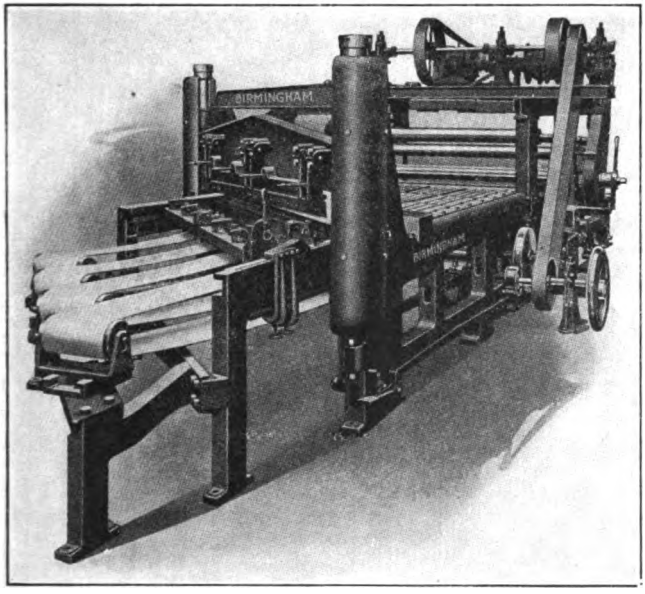

SCHOFIELD BIAS FABRIC SHEAR

stripping rollers controlled by a friction clutch requiring more or less continued attention, or else a variable speed device regulating more automatically the delivery of the goods to the cutters. The grippers cannot be depended upon to strip from the roll, otherwise the strength of the grip and the required pull would mutilate the edges of the cloth.

GORDON-BIRMINGHAM BIAS FABRIC CUTTING MACHINE

Referring to the illustrations, in which like letters indicate like parts in both drawings — *A* designates the side frames, *B* the roll of frictioned fabric, *C* the fabric, and *D* the liner roller. The fabric is passed over roller *E*, down and around roller *F*, and over roller *G*,

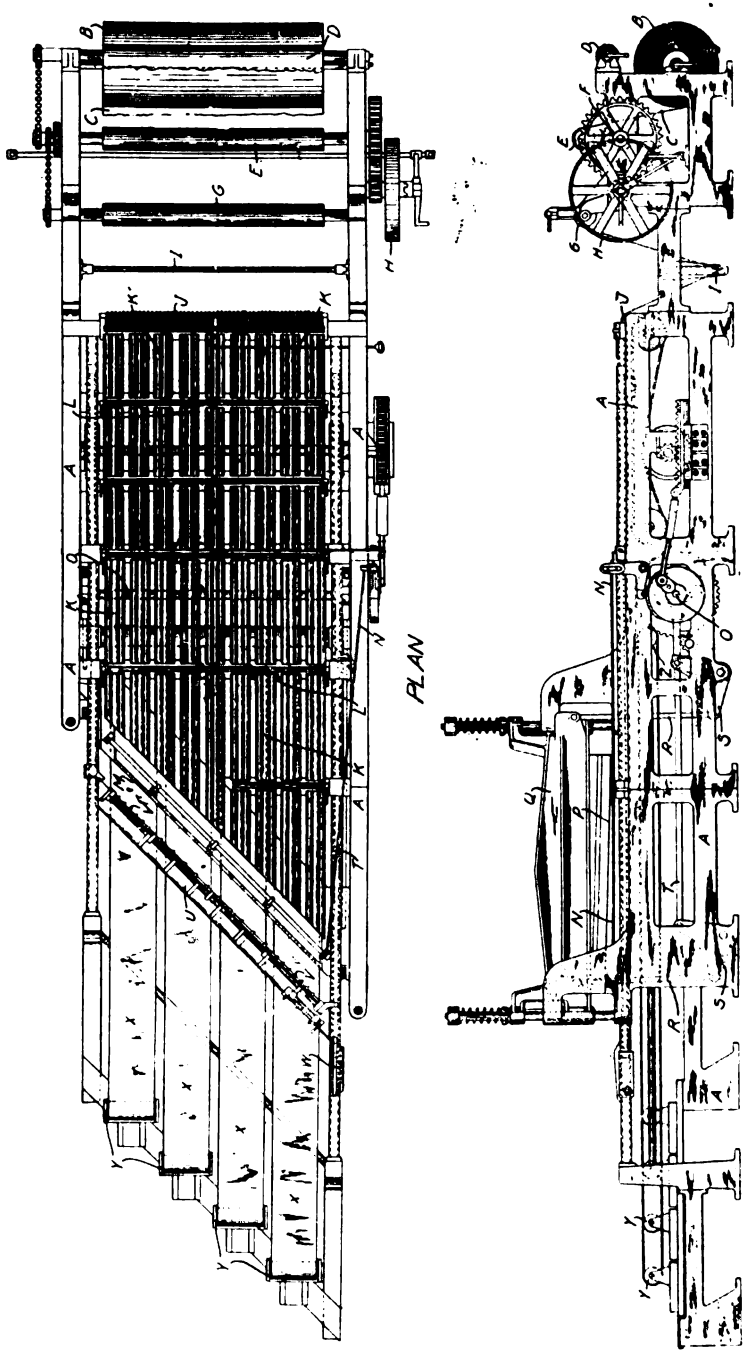

GORDON-BIRMINGHAM BIAS FABRIC CUTTER

all being positively driven from the belt pulley *H* by spur and chain gearing. From the roller *G* the fabric passes down under a weighted roller *I* and then over the fabric guide *J* to the table. The guide *J* consists of bent fingers, one set inclined to the right and the other toward the left. Their forward ends are connected with a slide operated by a hand rod by which the fingers are adjusted.

The surface of the table is formed by a series of ribbed plates *K* which are interrupted at intervals by spaces in which are mounted transverse rollers *L* which normally project above the plane of the table. These rollers are mounted so that they can be dropped below the plane of the table.

At the forward end of the table is a lower knife *M* which extends diagonally across the frame at an angle of 45 degrees. Above this knife is a transverse plate that is raised and lowered by rod *N*, a bell-crank lever, and a cam, driven from the main shaft *O*. Above the plate is a strip of card cloth beneath which the fabric passes and which prevents the fabric from creeping backwards while permitting it to be drawn forward. Co-acting with the lower shear *M* is a movable upper shear *P*, which is fixed to the bridge *Q*. The bridge and shear are raised by vertical rods *R R*, connected to bell-crank levers *S S*. The front lever *S* is connected by the rod *T* to a lever that is rocked by an eccentric attached to the main shaft *O*. The opposite lever *S* is connected by a short rod to a similar lever and eccentric on the same shaft so that the movement imparted to the rods *R R*, is the same and the bridge lifted evenly. The cutting is done by the downward stroke of the bridge and shear.

In front of the table is a carriage *U*, projecting beyond the rear edge of which is a series of lower gripper fingers arranged in line, with clearance notches. Co-acting with these lower fingers is a corresponding series of upper fingers or grippers *V* which are connected with a rock shaft mounted in bearings on the ends of the carriage. Secured to the rock shaft is a series of rearwardly extending arms beneath which springs are placed to force the grippers together. As the carriage moves toward the cutters, the grippers are open, but when the grippers have passed on the raising plate they are released by a lug striking a stop which closes the grippers, just as the fingers enter the notches in the raising-plate and while the bridge is raised. The grippers come together to grip the edge of the fabric which has been lifted from the lower knife by the raising-plate, the edge of the fabric being in line with and caught by the grippers.

Adjustably mounted on one of the tubular bearings is a cam W which determines the extent to which the fabric is drawn forward before the cutting takes place, and on the end of the rock-shaft is an arm which engages with this cam to open the gripper fingers. As the carriage moves forward the grippers are opened and the strip of fabric released, the machine being timed so that the cutter descends when the carriage reaches the limit of its forward movement. The severed portion of the fabric drops on aprons X, driven from a roller and running over adjustable rollers Y at the forward end of the machine.

With this machine the fabric is drawn on the table and spread out flat and any tendency to creep to one side is overcome by the warp fingers. If the fabric creeps to one side or the other, by manipulating the fingers which spread the fabric toward the opposite sides its course may be properly directed through the machine.

Bolton Vertical Bias Fabric Cutter

As a radical departure in design, construction and operating principle this vertical bias fabric cutter presents a variety of novel and interesting features. In operation the roll of frictioned fabric

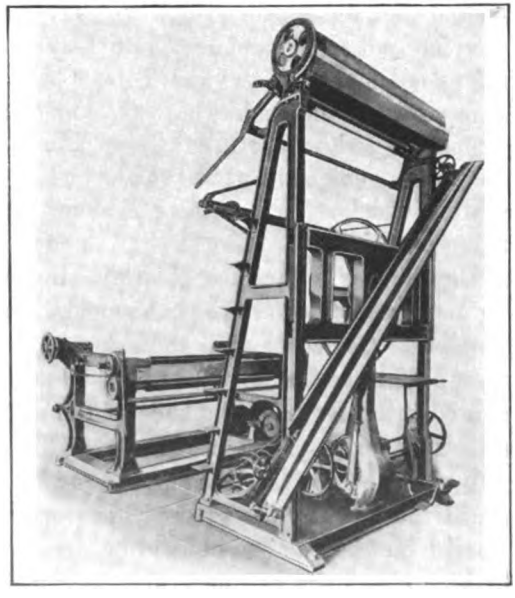

Bolton Vertical Bias Fabric Cutter

is placed in the take-off bearings arranged at the back of the machine and the end of the fabric is run between the tension rollers while the liner is wound up on a power driven roller provided for that purpose.

The fabric is then passed over the feed roller at the top of the machine and down the front to the diagonal clamping and cutting device shown in the front view of the machine and which may be adjusted to any required angle. The cutting is performed by a shuttle-like knife that is reciprocated by a rack and pinion gearing driven from the main shaft. As the fabric is intermittently advanced a predetermined distance by the top feed roller the fabric is firmly held by the clamping device while the reciprocating knife cuts off the strips in successive regularity. The machine occupies a very small floor space. In fact, a machine to cut 60-inch cloth on a 60-degree angle occupies a space of 9 feet by 5 feet with head room of 14 feet and requires no foundation for its support. Its accuracy is guaranteed and the cutting knife may be changed within a few moments. Two men can operate it.

Stevens Bias Cutter Take-Up

The expensive and tedious operation of removing strips of frictioned fabric from the bias cutter and placing them in "books" is entirely obviated by this machine. A traveling liner is provided upon

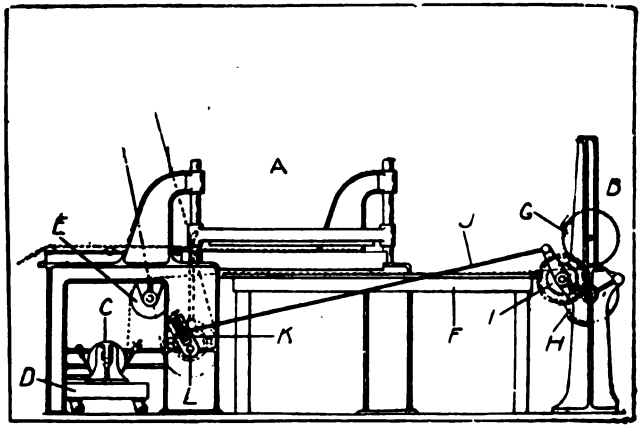

Stevens Bias Cutter Take-Up

which the strips fall, and which is wound up with them in a compact roll.

In the drawing, *A* represents a bias cutter of the ordinary type and *B* the take-up device. The liner roll *C* is mounted on a truck *D* that may be rolled out and a new liner roll replaced. From the roll the liner passes up over an idle roller *E* and then under the cutter and over the table *F*. This table is long enough to accommodate several strips of fabric for inspection or measurement prior to being rolled up.

The wind-up machine comprises two standards, provided with vertical slots or guides for the journals of the take-up roller *G*. Directly below the roller is a drum *H*, the surface of which is roughened and drives the take-up roller by contact. The drum is rotated intermittently by gearing and a pawl and ratchet wheel movement shown at *I* and actuated by rod *J*, attached to crank arm *K*, which is driven from the main shaft *L*. In operation, the bias strips as they are cut off fall on the liner strip and are carried to the rear of the machine where they are rolled up with the liner on the wind-up roller.

Neal Bias Fabric Reeling Machine

Referring to the illustration, *A* is an elevation of the delivery end of the bias shear, and *B* indicates the delivery belts. *C* is the side elevation of one of six reeling machines that are placed alongside the shear, with sufficient space between them for the six operators. As the cut strips are advanced by the traveling delivery belts of the shear, they are removed by the operators to the reeling tables, where the

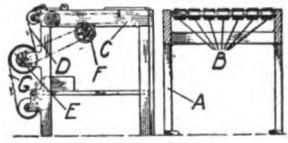

Neal Bias Fabric Wheel

ends are spliced together and the continuous strip *D* is wound up on the reel *E* by the hand wheel *F*. At the same time the liner strip *G* is wound between the strips of fabric.

Besides the saving of labor and the avoidance of the troublesome "books," it is claimed that a better splice is obtained by this method, due to the superior adhesiveness of the rubber fresh from the calender.

Nall Take-Off Reel

This machine spools fabric coated with uncured rubber and interposes the lining at the same time. A square reel frame is mounted on a shaft journaled in two side frames. It supports at opposite corners two lining spool shafts driven independently by chain belting from the center shaft. The coated fabric is attached to the empty fabric spool and the lining from the lining spool is wound up with it when the fabric spool is revolved. When the spool is filled the reel frame is reversed by being rotated. This places an empty fabric and a liner spool, previously placed in the frame, in position to be filled with fabric and lining.

Bridge Fabric Stretching Machine

Taking the stretch out of tire fabrics before cutting into bias strips is accomplished by this machine that is simply a frame, carrying a series of tension bars, take-off and wind-up rollers. The cloth starts at one end, is threaded over and under the bars and wound up on a floating roller at the front. This roller is supported on the ends of two levers pivoted in the center with counterweights on the opposite ends. This presses the fabric against a square shaft. The friction revolves the take-up roller and winds up the fabric.

BIAS FABRIC LOOMS AND MACHINES

Henderson-Mahon Diagonal Weft Loom

This is a power loom for weaving fabrics, in which the weft or filling is disposed at other than a right angle with respect to the warp threads, preferably at an angle of about 45 degrees. The lay and

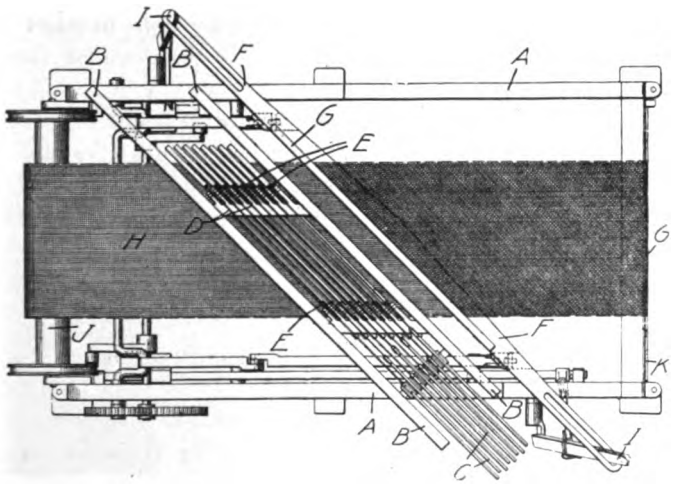

Henderson-Mahon Diagonal Weft Loom

harness are arranged diagonally to the longitudinal axis of the loom and the warp threads, the latter passing, as is usual, from a beam, through the harness and through the reeds carried by the lay, which swings to and fro in the direction of the warp and diagonally to the length of the lay.

In the illustration, the side frames *A*, are connected together by cross beams, with arches *B*, extending between the frames at the

top for supporting the harness frames. The arches *B* lie at an angle of about 45 degrees and support the harness at the same angle.

The harness frames, any number of which may be used, are offset slightly so that their side edges will lie parallel to the warp. This is done to enable the warp to be moved vertically by the heddles of the harness when the latter is raised and lowered, without causing undue friction on the warp threads. The heddles are moved by a well known type of head motion and comprise a number of jacks *C*, in the form of elbow levers, from the upper end of which two straps *D*, extend, passing over rollers *E* and down to the harness frame, there being two of said straps for each frame. On the opposite or horizontal ends of the jacks, other straps pass around pulleys at the bottom of the frame, thence toward the center of the frame and around pulleys, not shown, to the bottom of the harness frame. The jacks are operated by devices well understood and therefore not shown. The lay *F* is similar to that commonly in use, and has the reed *G* rising from the top through which the warp threads *H* pass. The lay extends across the frame in a diagonal direction parallel to said harness, the shuttle being thrown back and forth across the lay by the picker sticks *I*.

The warp threads *H* carried on the yarn beam *J* pass over a roller and thence through the heddles of the harness frames and the reed, the shuttle being driven back and forth on the forward side of the reed in order to weave the fabric which passes over a tension bar and is wound up on the cloth beam *K*.

Trautvetter Bias Fabric Loom

A modified form of rivet fabric, especially designed for motor tire building, is woven by this loom.

The fabric is regularly made of right cabled, soft yarn, and consists essentially of ground warp threads, bias or diagonal reinforcing threads and the usual filler threads. The ground warp threads are arranged lengthwise, parallel to each other, and the sets of reinforcing threads extend diagonally across the fabric in opposite directions from one selvage to the other and return, so that the bias threads cross each other between the adjacent picks and also at the top of the warp threads, which pass over the filler threads, while the bias threads pass under them. The bias threads cross each other under the filler so that the warp threads, the bias reinforcing threads and the filler threads are compactly interwoven, forming a strong and durable fabric, capable of withstanding strains in any direction. The small openings formed

in the weave are filled with rubber and the adjacent threads completely embedded by the calendering operation, thus forming thousands of small

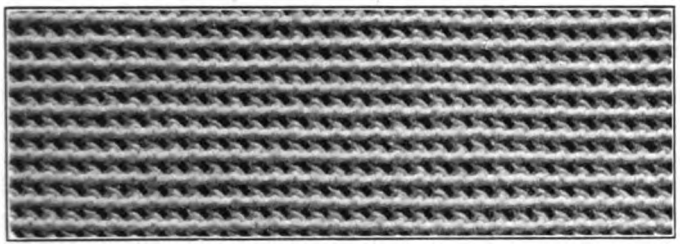

TRAUTVETTER BIAS TIRE FABRIC

rubber rivets that serve to prevent separation of the fabric plies when built up in a tire and vulcanized.

The loom which makes this fabric embodies several features of interest. For instance, the reel and harness are quite different from

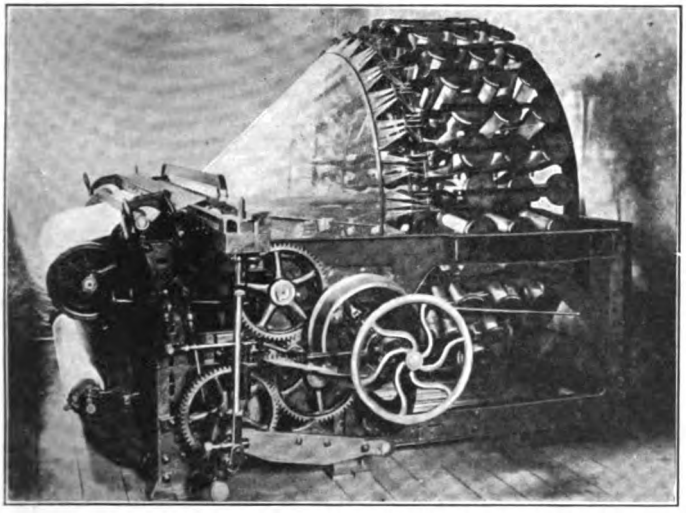

TRAUTVETTER BIAS FABRIC LOOM

those of the ordinary loom. The warp threads unwind from a warp beam journaled in the lower rear portion of the frame, and the bias threads unwind from spools journaled in a revolvable reel that is mounted on the top of the frame, while the filler threads are supplied by a shuttle mechanism and are beaten up against the fabric by an ordinary lay.

Herzog Bias Fabric Machine

Cotton and silk cloth of ordinary square-woven type in which the warp and filler threads are at right angles, may be converted into bias fabrics on the machine here shown. The warp threads remain in

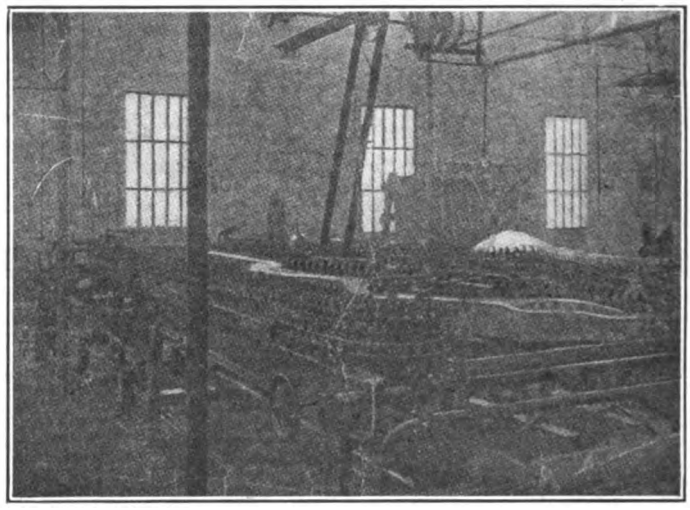

Herzog Bias Fabric Machine

their original position, but the fillers are inclined at an angle other than 90 degrees to the warp. This is effected by two series of interconnected grippers that grip the fabric edges, and being mounted on endless chains, one of which is retarded, the filler threads, while remaining parallel, are drawn into an angular position with regard to the warp; the width of the web being slightly reduced.

The bias web thus produced is impregnated with rubber solution on a spreader, after which two plies are superposed with the bias threads at opposite angles and united by passing through pressure rollers of a doubling machine.

CHAPTER XIV

TREAD MAKING AND APPLYING MACHINERY

Smooth Treads

SMOOTH treads are usually applied to the fabric carcass in one piece, either built-up or run by a special profiling calender or a tubing machine.

Built-up treads are made by laying up narrow strips of rubber, in graduated widths, in such a way that the center of the tread is thicker than the edges. The stock is prepared in the usual manner, and is then sheeted and cut into strips on the calender, or later on a strip cutter, after which the strips are run through a tread building machine which strips the liner away from the rubber stock and by means of suitable guides and rollers plies the various strips together in their order of width beginning with the widest.

Tire treads are also made by special tread calenders having profiling rollers which give the proper shape to the tread, gradually thickening toward the center, thus eliminating the building-up process. Tread stock so prepared is commonly referred to as "camel back" because of the hump in the middle and is usually made in strips eight to ten inches wide and about eight feet long.

Another method of making treads is to run them out on a tubing machine in the form of two treads joined at the edges, which are cut apart at the machine. By any of these methods the tread is plain unless converted into an anti-skid by further process.

Anti-Skid Treads

There are many methods of producing anti-skid treads. In some "wrapped tread" tires metal inserts are set about the tread. The cloth wrapping for vulcanization holds these inserts securely in the softened rubber until the pattern is rendered permanent by vulcanization.

Anti-skid treads for cycle tires are made in the shape of endless bands upon drums on the face of which the tread design is engraved. Tread gum is wrapped around the drum, and semi-cured just enough to set the tread. The tread is later applied to a tire carcass and the whole given its final cure.

Most anti-skid treads, however, are made by the tread design engraved on the inner surface of the mold in which the tire is cured.

RUBBER STRIP CUTTERS

One of the preliminaries in tire manufacture is the cutting of the calendered stock into strips for building up tire treads. For cutting the strips of rubber any one of a great variety of strip cutters may be used. A typical cutter made for this work is the Sweeney strip cutter.

Sweeney Rubber Strip Cutter

The drawing *X* is a longitudinal section of the traveling carriage which bears the cutters in operative position. It also shows a side elevation of one end of the cutting table and power transmitting device. *Y* is a cross section of the table carriage and cutters in operative position upon the table, and *Z* is a longitudinal section of the carriage showing the cutter bar in elevated position. *A* is the cutting table covered with a sheet of suitable material, which provides a firm surface and will not dull the cutters. The table is made the length of the strip to be cut. *B* is the carriage supported by the grooved wheels *C* running upon rails *D*. A similar carriage runs on rails on the opposite side of the table. Shaft *E* is the cutter bar supported at either end by bearings in the carriages. The circular knives *F* are mounted upon this shaft, to which they are secured by set screws so that they can be set at any distance apart. *G* is a frame pivoted on each carriage *B* at *H*, and containing the end bearings of the cutter shaft *E*. Thus

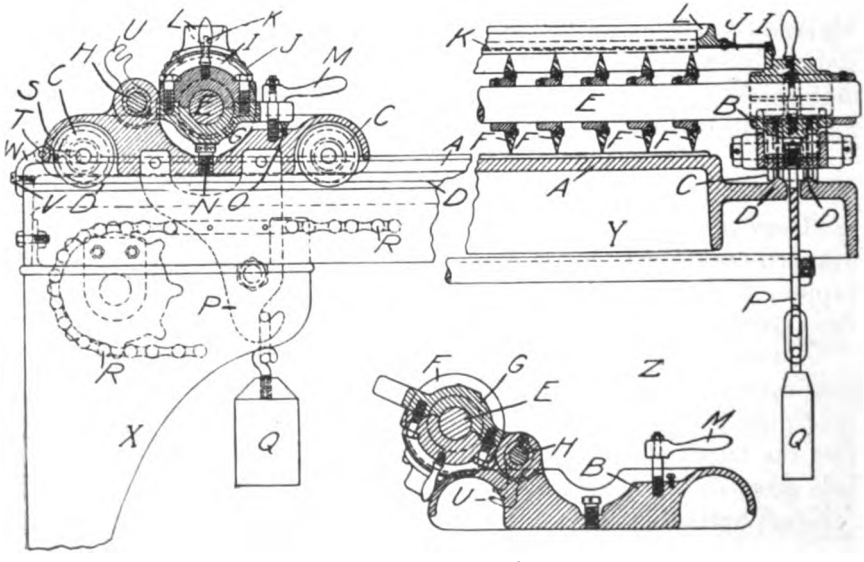

Sweeney Rubber Strip Cutter

the shaft *E* carrying the cutters may be elevated as shown in drawing *Z*. The caps which cover the bearings of shaft *E* are secured to frames *G* by screw bolts. They are slotted at the free ends to receive the locking bolt and lever *M*. The caps are provided with shoulders *I* which support a cross beam *J* above the cutters *F*. Along the top of the beam *J* is a slit, in which is inserted a strip of felt *K*, one edge of which projects below the inner concave surface of the beam and comes in contact with the cutter blades. Above the beam *J* and felt *K* is a water trough *L*. *N* and *O* are adjustment screws which regulate the height of the cutters above the cutting surface of the table. The hanger *P* which carries a weight *Q* is also attached to the chain *R* for imparting motion to the carriage. At *S* is a pair of jaws for holding a sheet of rubber upon the table. It is operated by a thumb screw and is supported by the rod *T*, which extends across the table. *U* is a hook which engages and supports rod *T*, which in turn supports the jaws *S* when the cutter bar is elevated for the return of the carriage along the table.

At the rear end of the machine a roll of the sheet rubber to be cut is supported on a frame, which also carries a roller for winding up the strip of cloth that is rolled with the rubber to keep it from sticking. Between this frame and the end of the machine is a cylinder covered with a soft brush, which revolves in a trough holding chalk dust. The rubber sheet to be cut is chalked on the under side, as it passes over the brush, thereby preventing the strips from sticking together after being cut.

In operation, the cutter carriage is brought to the end of the table nearest the roll of rubber. The cutter bar is elevated and the edge of the rubber strip is inserted between the jaws *R*, which are clamped together. The carriage is then started backward along the table, being propelled by the chain *R*, which passes around power driven sprockets *S*. The rubber sheet is drawn out upon the table as the carriage moves. When the carriage reaches the opposite end of the table the rubber is removed from the jaws *S* and secured to the table by screws *V* and straps *W*. The rubber sheet is also clamped firmly at the other end of the table. The outer bar is then lowered into operative position and secured by the clamp *M*. The driving mechanism is reversed and the carriage moved forward. The cutters move with a progressive rolling contact with the surface *A* of the table, cutting the rubber into strips. The felt strip *K* keeps the blades of the cutter moist with water from the trough *L*. When the carriage has moved forward to the end of the table the cutter bar

is again elevated and the cut strips are severed from the sheet by a hand knife. The rubber sheet is again drawn upon the table for another operation of the cutter carriage. The contact of the cutter with the surface *A* is adjusted by screws *N* and *O*, which regulate the distance of the bearings for shaft *E* above the cutter surface. The weight *Q* suspended on the hanger *P* keeps the cutter pressed against the surface of the table. Owing to the resistance offered by the rubber the cutters roll upon it without cutting through if not held by sufficient pressure.

Jelley-Hubbard Strip Cutter and Tread Trimmer

This machine for cutting both rubber and fabric strips and for trimming the edges of tire treads comprises a hinged table which is vertically adjusted beneath a rotary cutter by means of a screw, and a guide adjustable along an arm projecting over the table. By mounting a second cutter on the other side of the guide both edges of the material may be trimmed simultaneously. The guides may be adjustable towards, and from, one another as well as along the arm. By using a suitable number of cutters, a sheet of fabric may be cut into any desired number of strips. The cutter may be beveled on both sides so as to cut on the face of the table, which is preferably covered with zinc, or it may be beveled on one side only and operate in conjunction with the edge of the table.

TREAD BUILDING MACHINES

Pfister-Addyman Strip Cutter and Joiner

With this machine sheets of rubber are cut into strips for making inner tubes, or they may be joined for forming tire treads. It may also be used for cutting and joining frictioned fabric.

A sheet of rubber wound off a drum is cut into strips by wheels acting against complementary wheels. These strips are then carried along a table and are pressed by a roller on to a second sheet of rubber, which passes from one drum to another and is cut into strips by another set of wheels. The first set of strips, which are narrower than the second set, may be cut from a sheet of rubber of the same size, in which case the intermediate portions are led away around a drum and worked up again. Or the narrower strips may be cut from a smaller sheet, in which case they are guided apart during their passage over the table. The uniting of the strips is affected by the pressure of a roller against a drum, the roller being actuated by an adjustable spring. When new rubber is operated on, pressure alone is sufficient to unite the strips; otherwise, a steam pipe or a steam heated box of

triangular section may be used to heat the roller; or a cementing solution may be applied by means of a roller. The joined strips are cut into lengths by a cross cutting wheel operated by suitable means, and may be cut in both directions or in only one direction. In the latter arrangement a wire rope which actuates the cutter carriage, causes the cutting wheel to be depressed during the forward stroke, and raised clear of the material during the return. A special mechanism is provided for operating the cutter carriage and for locking and releasing the carrier arms at the required intervals.

Crook Tread-Building Machine

In Crook's machine for forming tire treads from several thicknesses or strips of rubber of various widths, and rolling all of the strips simultaneously into a gradually thickened tread, *A*, *B* and *C* are rolls of rubber strips of the various widths required. *D* is a drum mounted on the shaft *E*, and *F* is a segmental housing which carries a series of guide rollers *G*, corresponding in number to the number of strips used. Above each one of these rollers is a pressure roller *H*. These pressure rollers are mounted in sliding bearings and are forced against the drum by means of the springs *I*, which can be adjusted by the screws *J*. The face of the drum *D* is grooved, forming a series of steps corresponding in width with the strips of rubber used. The feed rollers and the drum are revolved by suitable mechanism and the several strips of rubber are delivered to the revolving drum over guide rollers *K* and under guide rollers *G*. Each successive strip of rubber

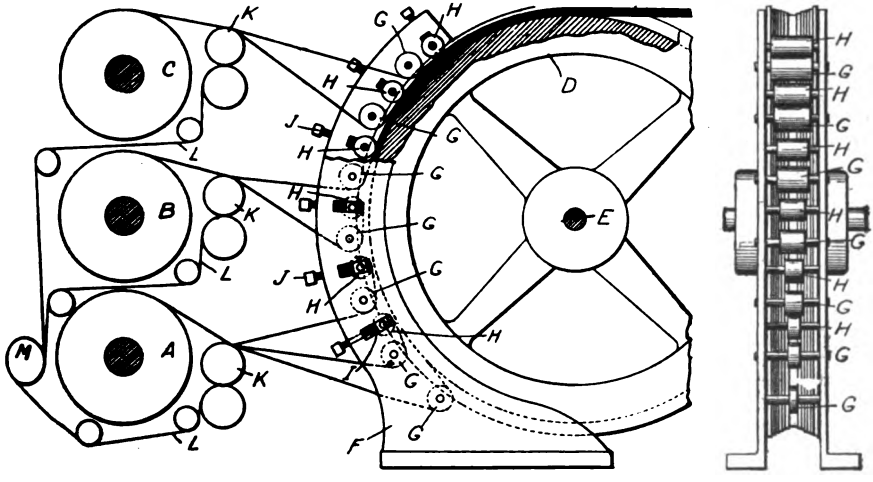

Crook Tread-Building Machine

is wider than the preceding one and as the strips are pressed into grooves by pressure rollers *H* the tread is gradually built up. The strips of fabric or wrappers L, with which the rubber is wound to separate it, are wound up on the receiving roll *M*, from which it may be unwound and used again with fresh rubber strips.

Birmingham Tread Machine

An important feature of this machine is its adaptability for laying up inner flaps as well as treads, an item which is very large in some mills.

For treads the stock is prepared in the usual manner, and is then sheeted and cut into strips on a calender. The rolls of stock are taken to the tread room, mounted on a let-off, and carried through a

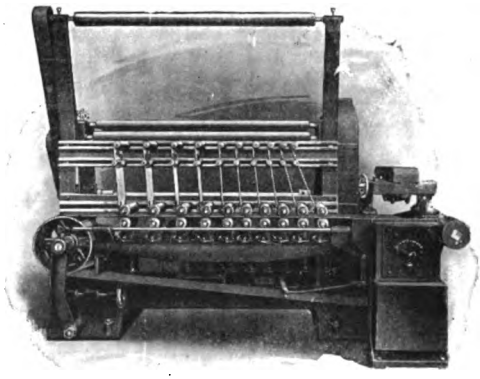

Birmingham Tread Machine

stripping mechanism by which the rubber is separated from the liner. After passing over the driven roller at the top of the machine, the rubber strips make a quarter turn and pass down over idler rollers through chutes, which guide them to the center of a series of iron rollers running on a belt. The widest strip is first rolled on, then the next widest and so on until the required number have been plied up for the tread. By this method of laying each tread separately, all possible entraining of air is prevented, and a more uniform tread is obtained.

Gordon Tread Strip Building Machine

With this machine tread strips are formed for smooth tread automobile tires. The strips are built up in varying lengths and are made up from successive layers of rubber of different widths, super-

imposed one upon the other with a wide strip for the bottom and decreasing as they reach the outer surface. These strips are fed from rolls and led to positions one in advance of the other.

Rubber as it comes from the calender is cut into strips of varying widths and wound on a roller with liner strips so that the convolutions of the rubber will not adhere. The strips of rubber and wrapper pass a driven roller over which the wrapper passes around another driven roller, and over an idler to the take-up. The strips of rubber pass upward between supporting rollers, downward over turning rollers by which the plane of the strips is turned at right angles into the plane of the bearing rollers under which the strips pass to the right from a vertical to a horizontal direction on to the apron. It is upon this apron guided over pulleys that the several strips are plied together and the tread strip is formed. Below the upper run of the apron are a series of pressure rollers normally forced against the apron by adjustable springs. Above the upper run of the apron and corresponding in number to the supporting rollers are a series of bearing rollers which are arranged in different planes so as to stand at slightly increasing elevation from the plane of the apron. At the rear of each bearing roller is pivoted a yielding guide plate with guiding fingers. The mechanism is driven through shaft and co-operating gearing and

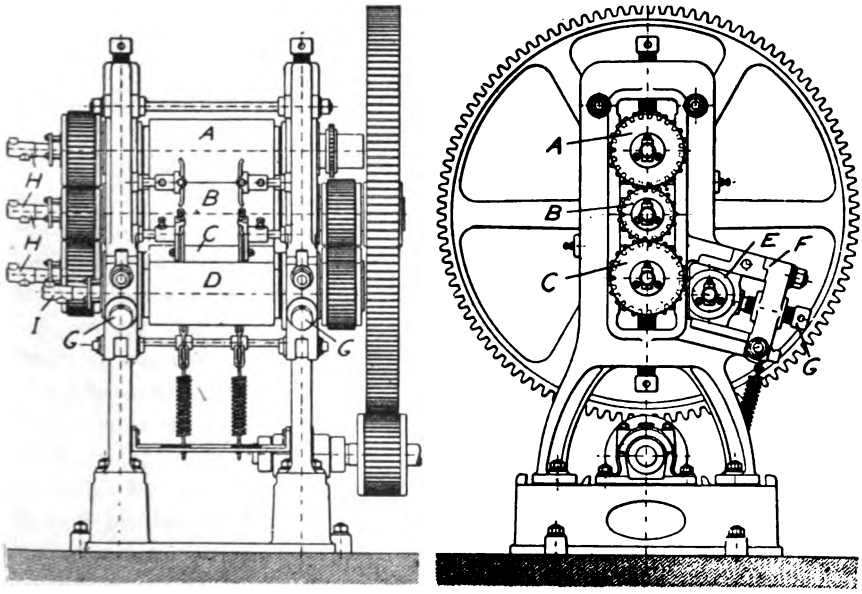

TROESTER TIRE TREAD CALENDER

sprocket chain. At the right hand end of the apron is a driven pulley from which a conveyor belt passes by which the finished tread is delivered from the machine.

Tire Tread Calenders

Tire treads are also made quickly and at low cost by special profiling calenders, thus eliminating the building-up process.

Troester Tire Tread Calender

In a German type of calender used for forming and embossing the treads of tires, there are three rolls, *A*, *B* and *C*, arranged vertically as in the usual three-roll calender and an engraved steel side roll *D* is journaled in the housings to bear and revolve against the lower roll. This side roll is grooved and engraved to form the gradually thickened tread of the tire. It is mounted in sliding bearings *E* in the side frames *F* in such a way as to be easily removed for substituting rolls of different pattern. The distance between the engraved roll *D* and the lower roll *C* is adjusted by means of screws *G*. All four rolls are hollow and are provided with heating and cooling connections as shown at *H* and *I*. The machine is driven by spur gears.

Olier Tire Tread Calenders

The Olier profiling calender has four rolls, two of which are provided with removable sleeves for the substitution of sleeves of different profile. This calender is designed particularly for profiling the treads of rubber tires. The feature of this calender is in the method of attaching and adjusting the removable sleeves.

Referring to the two drawings of the calender, *A* and *B* indicate the two side frames, while the four rollers are shown at *C*, *D*, *E*, and *F*. The two inside rollers *D* and *E* have removable profiling sleeves *G* and *H*. The upper and lower rollers are mounted in the usual manner in sliding blocks which may be adjusted vertically by means of worm gears *I* and *J*. The two inside rollers are supported at one end of the frame *A* as usual. The roller *E* rests in stationary bearings while the roller may be adjusted vertically by means of wedges *W* movable at right angles to the axis of the rollers. The four rollers are geared at this end of the machine by spur pinions *K* driven from the large gear *L*. In order that the sleeves may be removed from the inside rollers these rollers are not mounted directly in the side frame *B*, but are carried in an auxiliary frame *M* which is inserted in an opening in the side frame *B* and secured to the latter by nuts *N* on stud belts. The right end of roller *D* is mounted in a movable bearing adjusted by

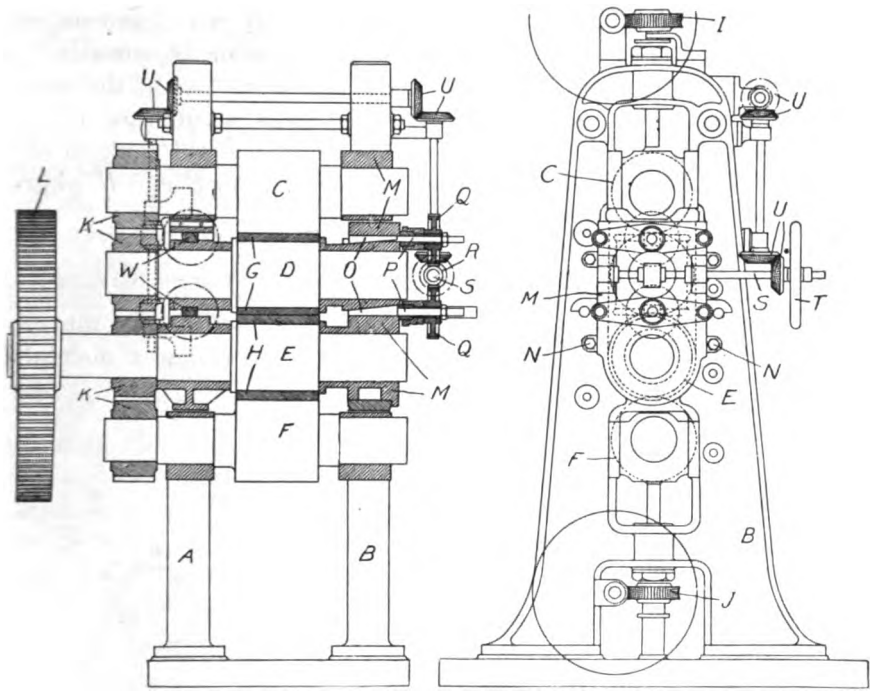

OLIER TREAD PROFILING CALENDER

wedges *O*. The wedges are each provided with a threaded stem *P* secured in nuts which are rotated by worm wheels *Q* operated by the worm *R* on the shaft *S*. This shaft is operated by a hand wheel *T*. By turning this wheel the wedges may be moved in or out to adjust the distance between the profiling sleeves. By means of the train of bevel gears *U*, the wedges on the opposite side of the frame are adjusted at the same time so that the rolls are kept parallel. For changing the sleeves it is only necessary to unscrew the nuts *N* and disengage the bevel gear on the shaft *S*. The whole removable frame together with the wedge operating device may be then withdrawn from the side of the frame *B*.

KEARNS CALENDER FOR TIRE TREAD STOCK

This machine is a modified four-roll calender provided with pressure rollers that act on the stock before passing between the rolls, and forming a slight bank in front of each roller, thus eliminating air bubbles, equalizing thickness, increasing density and reducing surface imperfections in the calendered rubber strip.

The batch of rubber *A* is fed between rolls *B* and *C* and as the strip of rubber passes under the first banking roller *D*, pressure is exerted on the stock, forming a slight bank on the surface of the strip. After passing between rollers *C* and *E*, the strip is subjected to the action of the second pressure roller *F* that forms a slight bank on the surface of the stock which now passes between rollers *E* and *G* where it receives its final form and finish.

Hanna Calender for Forming and Joining Rubber Sheets

A plurality of rubber sheets are calendered sufficiently thin to avoid blisters, and superposed by this machine, forming a multiple

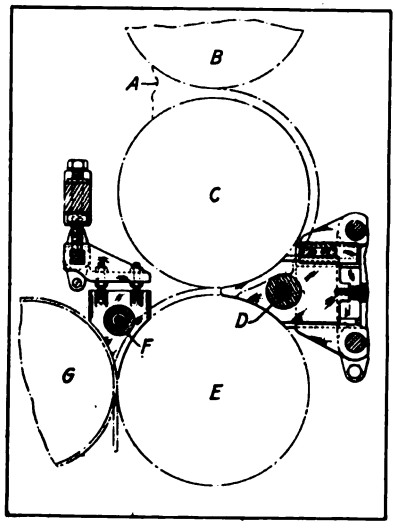

Kearns Tire Tread Calender

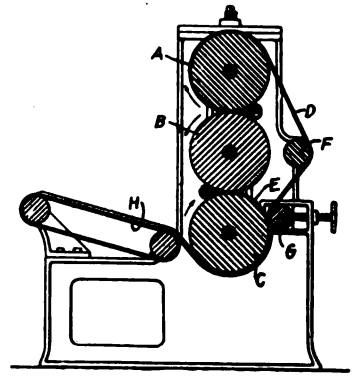

Hanna Multi-Ply Calender

sheet of desired thickness for making tire building strips. In the operation, rubber stock is fed between rolls *A* and *B*, and also between *B* and *C*, forming banks shown in the illustration. As the rolls rotate in the direction indicated by the arrows, the rubber is formed into relatively thin sheets *D* and *E*.

The upper sheet *D* passes over idler roller *F* and under pressure roller *G*, where it is united with sheet *E* and then delivered from the machine by the conveyor *H*. A multiple sheet is thus formed that will be free from blisters and devoid of the usual imperfections encountered in calendering thick sheets. Three or more plies may be formed by providing rolls for each additional ply.

TREAD APPLYING MACHINES

Numerous machines have been devised for the special purpose of applying built-up or calendered treads to the carcass of the tire.

Eccles Tread Applying Machine

The Eccles machine consists of a pair of grooved and recessed rollers, the upper member of which is mounted in a slide and weighted, the lower member being driven. Rollers secured to the frame guide the tire cover, suitably solutioned or prepared, and the tread strip, through the nip of the main rollers. The pressure upon one of the rollers may be relieved by means of a catch.

Williams Tire Tread Applying Machine

The Williams machine designed for the special purpose of building the tread upon the carcass of motor tires, is shown in two views. Journaled in the frame of the machine is the shaft *A* to which is attached at each end a sprocket wheel *B*. Also journaled in the frames are the shafts *C* which carry the cylinders *D*, having at their ends the sprocket wheels *E*. Passing around the sprockets are chains *F*, carrying an elastic apron *G*. The mandrel or core which supports the carcass is loosely journaled in brackets, supported in the vertically sliding frame *H*, which is raised and lowered by means of the screw-shafts *I* operated by a system of bevel gears and a clutch from a counter shaft *J*. The latter is driven by a belt pulley *K* from the main driving shaft *A*. Two forming wheels *M* are located under the top of the elastic apron. They are adjustable to any angle and are made to follow the contour of the tire tread by means of right and left threaded screws, on the ends of which are pinions *N* meshing with the segment gears *O* operated by lever *P*. *Q* represents a steam chambered hood which is adjustable vertically by means of the cable *R*, to which is attached the counterweight *S*.

In the operation of the machine, the core or mandrel upon which a tire carcass has been mounted, is rolled on the track *T* into position between the center bearings. Cement is applied to the outer tread portion of the carcass. The core is allowed to depress the apron to a certain depth. Power is applied to the pulley *K* on the main drive shaft and the breaker strip is fed to the carcass. After one revolution the forming wheels are fed in a little and at the same time the core is made to depress the apron a little more. The heavy strip to form the tread is then placed on the apron, the core is raised, and the operation is repeated the same as in applying the breaker strip. Just before a complete revolution is made the rear end of the strip is cut

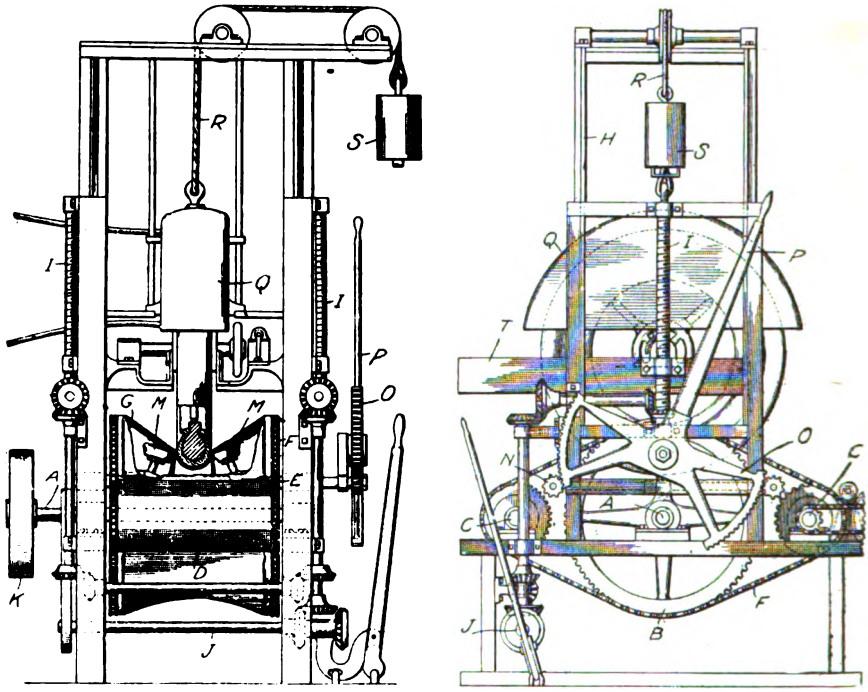

WILLIAMS TIRE TREAD APPLYING MACHINE

off to exactly the proper length and the revolution is then completed. After several revolutions are made the heating jacket Q is lowered over the upper portion of the tread and the heat renders the rubber pliable and sufficiently plastic for the forming wheels to thin down the edges. Only a few revolutions are necessary to complete this operation. The completed tire is then ready to be vulcanized.

HOYT TIRE TREAD CENTRALIZING DEVICE

Hoyt's apparatus provides a ready means of centralizing anti-skid treads upon the tire carcass, and of removing the interposing fabric liner previous to rolling the tread into firm contact as part of the casing. The tread is placed on the carcass in the usual manner with a protective round of fabric between, and is then rotated between a pair of jaws which operate on the circumferential anti-skid projections and serve to shift the tread transversely during the rotation of the tire until it becomes accurately centralized throughout on the carcass. The interposed layer of fabric between the carcass and tread is then withdrawn by pulling the free end from underneath that portion of the

tread against displacement meanwhile. The tread is finally hammered manually into firm contact upon the carcass.

Brucker Tire Tread Rolling Device

The carcass is built up with successive fabric plies and the beads applied in the usual manner with the exception, however, of the tread and fabric strips forming the outer covering. These parts are mounted one upon the other as they come from the calender, in the following

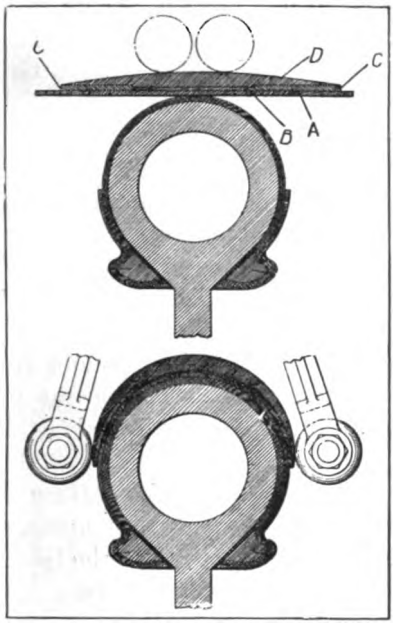

Brucker Tread Rollers

order: First comes the cushion strip *A*, that covers the tread portion and extends part way down the sides of the carcass; then the breaker strip *B* and the filler strips *C* that abut against the edges of the breaker strip, and finally the tread strip *D*. A pair of rolling devices, comprising two spherical bodies mounted in ball bearings at the ends of two co-acting arms, exert a circumferential as well as radical action in rolling the slab on the carcass.

Hibner Tread Cementing Machine

This applies a coating of cement to the buffed surfaces of tire casings prior to applying the tread bands.

Thompson Tread Handling Device

Calendered tread stock is delivered from the profiling calender in the form of a strip eight to ten inches wide and about eight feet long, and is usually conducted from the calender by an endless conveyor. It is customary for one man to stand at the center of the conveyor and cut the tread, and for a second man to stand at the end of the apron and hold the shell upon which the tread is rolled. This man hands the rolled-up tread to a third man who unrolls it into a book, while a fourth man rolls up the liner strip. With the Thompson tread handling device the second and fourth men are dispensed with.

The device comprises a roller of relatively large diameter, and a roller of relatively small diameter, these rollers being equal in length and connected in spaced relation by a link, the ends of which form two shafts upon which the rollers turn freely. Upon the small roller is spooled a liner strip of muslin or like material.

In operation the operator rolls the large roller over the tread discharged by the calender, taking care to first apply the end of the liner strip to the end of the tread, so that the tread winds itself spirally upon the large roller, each convolution of the tread having over it a convolution of the liner strip which is unwound from the small roller by the rotation of the large roller. The operator then transfers the tread to the book by rolling the large roller along the book, and at the same time he spools the liner strip upon the small roller by allowing the small roller to frictionally engage the surface of the tread and be rotated thereby. Thus as the device moves along, the tread is simultaneously unrolled from the large roller and the liner strip spooled upon the small roller so that it is again ready for use.

"Energized" Tire Machinery

In the manufacture of a certain type of tire, now commonly known as an "energized" tire covered by British patent No. 18,763 of 1908, and in which a suitable core is wrapped with strip rubber under tension, two special machines are employed.

Blaisdell Abrading Machine

With this machine rubber strips are roughened on both sides by being drawn between abrading wheels. Side frames *A* support two pairs of oppositely placed abrading wheels *B* and *C* driven by belt *D* and spur gearing *E* from the main shaft *F*. The strips are drawn through the machine by pairs of rollers *G*, *H* and *I* driven by chain belt *J*. Tension is maintained on the strip by driving the front rollers *G* at a lower speed than the rollers *H* and *I*.

Referring to the side elevation, the strips are fed from the stock spools *K* and after passing between the abrading wheels *B* and *C* are wound up on the spools *L*. The strips are kept up to the wheels by idler rollers *M* and *N* shown in the plan view. The four rollers *M* in front of the abrading wheels are crowned or elliptical in shape to equalize the abrading action over the surfaces of the strips. The par-

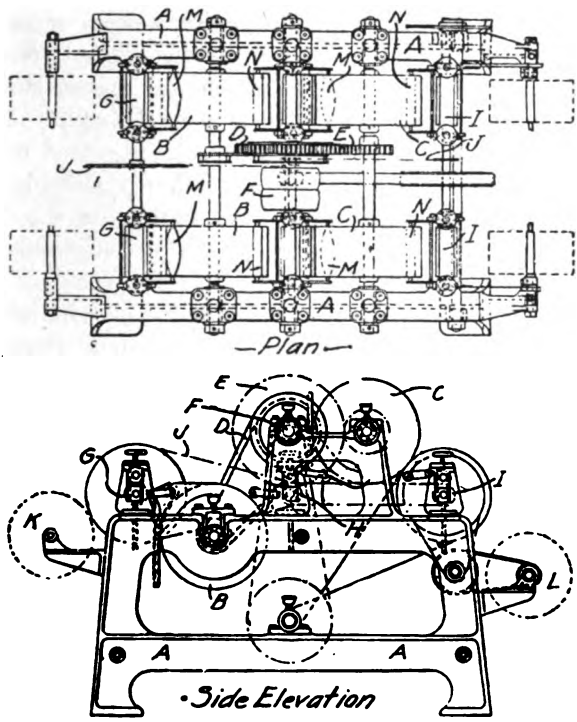

BLAISDELL ABRADING MACHINE

ticles of material removed are carried away through pipes by an exhaust fan. As the strips leave the last pair of rollers they are passed over smoothing bars which remove the creases and wrinkles.

BLAISDELL RUBBER STRIP WINDING MACHINE

With this machine rubber strips may be wound automatically on a tire core under adjustable tension and at any desired angle. It comprises three or more parallel delivery rollers between and by which the core of material to be wrapped is rotated, and a carriage traversed to and fro lengthwise of the machine by hand for delivering the strip

rubber. The rollers are driven positively always at the same speed by means of end pinions engaging toothed wheels on a shaft driven by chain gear from the main shaft. Movement of the roller bearings in arc slots enables the rollers to accommodate the increasing diameter of the core due to successive wrappings; these bearings are carried by bell-crank levers, having weights at their ends, and links connecting the levers to the bearings of the idler roller. The strip rubber, solutioned on both sides and provided with a strip of fabric, etc., for keeping the solutioned surfaces out of contact, is fed from a bobbin to the core by means of feed rollers which are driven slower than the delivery rollers to give the desired tension to the strip. Means may be provided for varying this differential speed. The feed roller is driven by chain gear from a sprocket wheel feathered slidably on a driven shaft which also drives the bobbin for winding up the fabric or like strip. The carriage is moved along by predetermined amount in advance or in rear of the point of winding by means of an adjusting device having one pointer to indicate the angle of winding and another pointer coinciding with the leading edge or some other part of the rubber strip so as to aid the operator in traversing the carriage. The machine is preferably electrically driven.

MACHINERY FOR MAKING ARMORED TIRES

For the manufacture of so-called puncture-proof and other special tires having leather or rubber treads in which wire, chain and metal bands or disks are embedded, or to which they are attached, either for protection of the inner tube or for reinforcement of the casing, several special machines and devices have been invented.

Gautier Armored Tire Building Machine

Tire covers made of separate transverse lengths of rubber covered chain placed side by side are made by this machine in which carriers holding each length by its ends are moved downwards and inwards by cams so as to lay the length across the former and place its ends on the beads.

A German Tread Riveting Machine

With this German type of machine used for applying non-skid rivets to leather treads, the treads are first punched with holes of the proper size for the rivets, in an ordinary punching machine, and the rivets are inserted. The tread is then placed on the guide bracket at the top of the machine and over the rollers provided for that purpose. The riveting table is provided with an adjustable circular anvil

which fits the rivet head. An enlarged view of the riveting tool is shown at the left of the machine. This tool has two rollers of hardened steel, whose size depends upon the diameter of the heads to be given to the rivet shanks. These rollers revolve parallel with each other but in opposite directions. The tool is fitted into the spindle by means

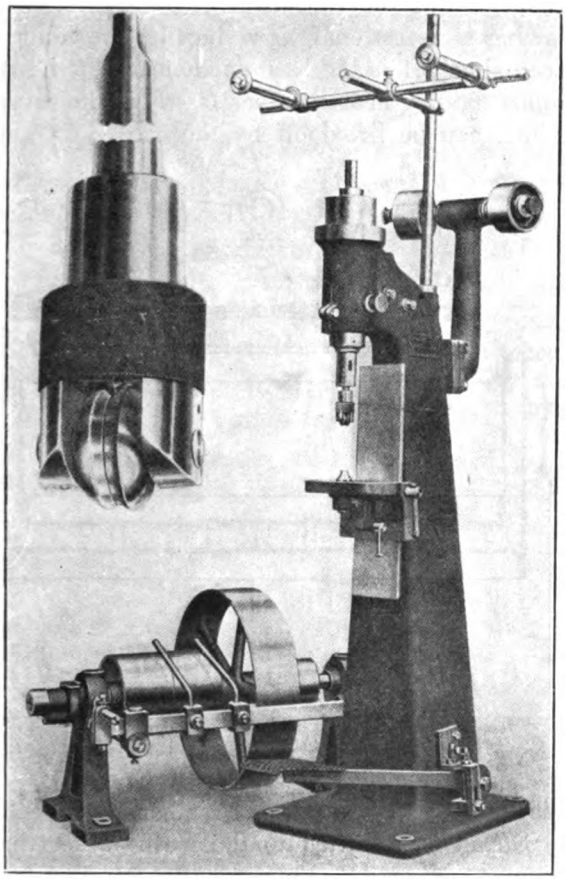

GERMAN TREAD RIVETING MACHINE

of a taper shank and is driven by a pulley feathered on the upper end of the spindle, by an endless quarter-turn belt, which passes around the two idler pulleys from the counter shaft above. By means of a foot lever the spindle is moved in and out of contact with the rivet shanks, which are riveted and shaped one at a time by the revolving tool. An experienced workman can easily finish 35 to 45 rivets per minute.

Frost Leather-to-Rubber Vulcanizer

Frost's apparatus is adapted to vulcanize a new non-skid leather tread on a new rubber tire or to retread an old tire with leather. It is a steam heated vulcanizer using dry heat by means of a steam jacket, which is also arranged to permit the removal of tires from the inner chamber without cooling the vulcanizer.

The drawing is a sectional view showing the inner chambers for dry heat vulcanizing. *A* is the base portion and *B* the steam chamber which surrounds the dry heat chamber *C*. *F* is the cover of the main vulcanizer which can be lifted off by the eye bolt *G* after loosening

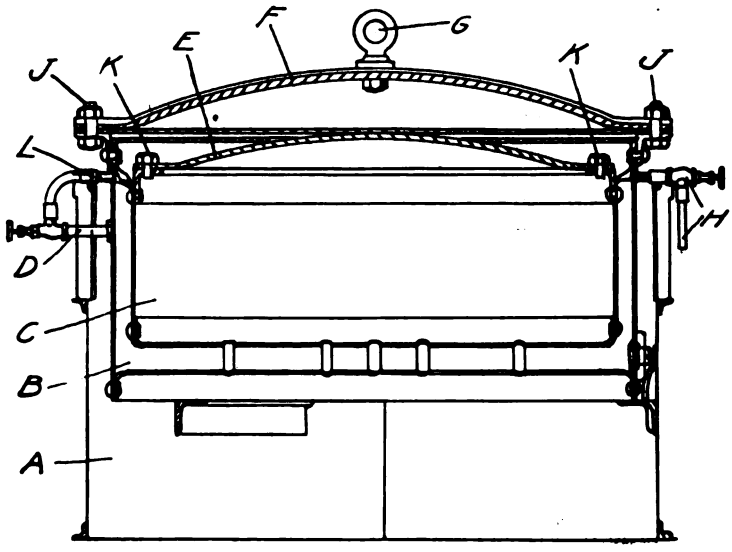

Frost Leather-to-Rubber Vulcanizer

bolts *J*. *E* is the cover to the inner chamber, to which it is fastened by bolts *K*. Steam is admitted to the main jacket through pipe *D* and into the jacket surrounding the cover through pipe *L*. The exhaust and drain pipes are shown at *H*.

In operation, the tires to be vulcanized are placed in the inner chamber and the inner cover *E* is bolted in place. Then the top cover *F* is bolted down and steam is turned into both the main and upper steam jackets through pipes *D* and *L*. After the cure is complete the tires can be removed without exhausting the steam from the lower jacket. This is claimed to be an important advantage in this class of work.

Rousillon Wire Winding Machine

With this machine for armoring tire casings, rubber coated wires are spirally wound upon a rotating annular former by means of a recessed movable bead rotating around the former in a plane perpendicular thereto.

Atlas Metal Disk Feeding Machine

This is an apparatus for feeding disks of hard material on to a band for making protective puncture-proof bands for pneumatic tires.

Wadsworth Wire Spiral Machine for Tire Treads

With this machine wire spirals are wound and filled with rubber compound for incorporation in the treads of tire casings. As the spiral is wound it is run through a tube into which the compound is forced by a feed screw. This forms a composite rubber-wire cylinder, which is cut into proper lengths and laid in the tread as the latter is built up. In the completed tire there are four of these wire spirals running longitudinally around the tread just under the surface.

Henry Wired Tread Making Machine

This is a machine for making that sort of tire treads in which a large number of wires closely resembling card wires, arranged end outwardly so as to contact with the ground, are embedded in the tread in a slightly slanting position.

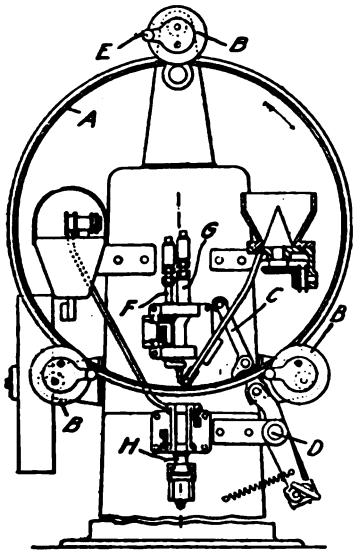

Dunlop-Keegan Tread Studder

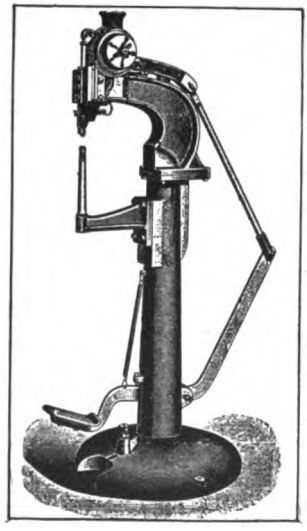

Stimson Tread Riveter

Dunlop-Keegan Stud Applying Machine

Steel studs of leather non-skid treads are evenly spaced around the tread in three staggered rows by the machine illustrated herewith. Referring to the drawing — the hoop shaped template *A* has three rows of holes corresponding to the studs on the tread, and is supported by three rollers *B*. It is turned intermittently by a pawl that engages teeth cut on the inner periphery of the template. The lever *C* that moves the pawl rocks on shaft *D* through a cam on the driving shaft. The template *A* is adjusted transversely for a new row of studs by the eccentric sleeves of the rollers *B* operated by handles *E*. The tread is slipped on the template, which is then placed in the machine. The punch *F*, guided by the template, punches a hole, and a stud is brought forward and inserted from below by the plunger *H*. A washer, fed from above the template, is dropped over the stem of the stud, which is then riveted by the hammer *G*.

Turpin-Snodgrass Tire Tread Studding Machine

With this machine non-slipping or wearing studs are automatically inserted and secured in tire treads and bands quickly and with great accuracy, avoiding several manual operations that were formerly necessary. It comprises a feed device or mandrel for supporting and moving the tire tread, a punching device for perforating the tire tread, and a stud inserting and securing device. The tire tread is perforated ready to receive the studs which are successively pressed into the perforations and a retaining washer is applied to the stem of each stud, the stem being burred to retain the washer. The mandrel is intermittently rotated by a ratchet driving wheel actuated by an adjustable pawl, and suitable locking devices or plungers co-operate with the ratchet wheel to retain the same and the mandrel stationary when the punching, inserting and securing operations take place. The studs and washers are automatically supplied from separate hoppers to separate carrier devices which move the studs and washers one at a time. The movement of these carrier devices is effected by eccentrics mounted on the main driving shaft which are coupled to and uncoupled from the driving shaft by clutches actuated by suitable hand levers.

Gottwals Armor Applying Machine

This is a device for rapidly and accurately applying metal armor plates or disks to the surface of one or more layers of cemented rubber or fabric of which the tire casing is composed. Three layers of metal

disks between four layers of fabric form the usual armoring, three strips being prepared simultaneously. These strips, suitable in length and width for the circumference and diameter of the tire covering to be made, are clamped to a carriage which passes through the machine and subjects them successively to the action of cement applying and spreading means, cement drying air trunks and a disk feeding and applying mechanism.

Stimpson Machine for Applying Split Rivets to Treads

One type of non-skid stud that is largely used abroad is the bifurcated or split rivet, one that does not require holes being punched in the material before applying the rivets.

The Stimpson machine is used for applying one type of split rivet in lengths from ¼-inch to ⅝-inch, inclusive. It is operated by foot-power, the work being held on the anvil by the operator. The rivets are contained in the hopper shown at the top of the machine and are automatically fed to the reciprocating head, where they are forced through the tread stock and riveted by the treadle action.

CHAPTER XV

BEAD MAKING AND APPLYING MACHINERY

Manufacture of Tire Beads

BEADS were originally built up by hand on the ring core. The present practice of making them separately and applying to the tire carcass has made possible the employment of machinery to a considerable extent. Owing to the varied character of the beads themselves, numerous different machines are in use.

Ordinary tubing machines with suitable dies are used to run rubber cores for regular clincher beads. These are afterward semi-cured in straight lengths in a goose neck bead press or in annular molds in a hydraulic press vulcanizer. Tubing machines are also used for covering flat braided wire used in the manufacture of straight-side tire beads. Before going to the tire builder the finished beads are dipped in cement and hung on racks to dry. This insures firm adhesion to the fabric plies in building up the tire.

Special machines of several sorts make the various quick detachable beads. One machine forms the bead entirely of strips of frictioned fabric which are led through bunching dies and shaping rolls. Another winds rubber impregnated thread or cord around an annular form and wraps it with frictioned fabric. There are machines for winding strands of piano wire from a spool on to a former wheel for making the cores of inextensible beads, and other machines for wrapping these annular bead cores spirally with frictioned tape. There are also molds in which bead cores of frictioned fabric and flat braided wire tape are built up by hand and semi-cured.

TYPES OF BEADS

Regular Clincher Bead

The rubber center of this bead is run from a tubing machine in close conformity to its final form, spliced into ring form, molded and partly cured. It is then covered with cement and enclosed in a single bias ply of heavy drill friction-coated on both sides. In this condition it is ready for building into place with the fabric plies of the casing.

Formerly this style of bead was molded in straight lengths and spliced endless, but this method has been superseded by the plan of building and curing in endless form.

Quick Detachable Bead

This bead is built up in several ways to secure the required firmness and non-stretchable quality. Often the body of the bead consists of rubber cemented cord built up to the general form and wrapped in a bias ply of heavy drill frictioned on both sides. A common way to effect this is to lay the endless band of rubber-coated sheeting on a triangular groove on a drum, and having wound a sufficient quantity of cemented cord to fill the groove, fold over the edges of the drill and transfer the raw bead to a mold for forming and semi-curing it to shape. Steel piano wire embedded in layers of semi-hard rubber is sometimes used instead of cord, or several strands of wire or cable forming an annular core are wound with frictioned tape. The quick detachable bead is formed and vulcanized as the hard rubber bead is.

Straight-Side Detachable Bead

The straight-side detachable bead is made precisely similar to the quick detachable, except as to its straight-side form and that it is always built with steel wire as the chief component to avoid liability of stretching in service. A braided spring steel ribbon is much used in making the straight-side bead because of its non-slipping grip as compared to plain wire.

Braided Bead Wire

A flat woven bead braid of high tensile strength steel wire is much used in making the straight side bead, because of its non-slipping grip, as compared to plain wire. This is a metal ribbon made in approximately

Standard ⅜-inch Bead Braid

⅜. 11/32, 5/16 and ¼-inch widths of 21, 19, 17 and 15 strands, respectively, of .025 high carbon wire, presenting an open mesh which firmly interlocks with the hard rubber bead composition during the vulcanization. Three, four or five wraps of this braided steel band are used, according to the size of bead under construction. The grip, being embedded in the hard-rubber stock, renders soldering of the outer ends unnecessary.

The standard ⅜-inch braid has 21 wires of high tensile strength interwoven in such a way that each wire supports the others, yet there is a somewhat open mesh, so that the hard-rubber bead composition

can run between and around the wires, giving it something with which to amalgamate, preventing loosening or lengthwise sliding of the braid and forming an absolutely rigid bead which will hold its shape permanently.

The proper kind and number of layers of braid per bead to use for different tire sizes, together with the pressure required to burst beads of this construction are as follows:

Layers of Braid per Bead	Kind of Braid	Tire Sizes Inches	Pounds Pressure to Break Bead
3	17 strand	3½	over 7,000
4	17 strand	4	over 9,000
5	17 strand	4½ and 5	over 11,000
4	19 strand	4 and 4½	over 10,000
3	21 strand	3½ and 4	over 8,000
4	21 strand	4½ and 5	over 12,000
5	21 strand	4½ and 5	over 15,000

The width of the braid used in a bead depends upon the size of the bead cavity. It is advantageous to use a braid that will lie parallel to the base of the bead.

Making Braided Wire Beads

Several different methods of using flat woven steel wire braid in making beads are advocated by different tire manufacturers. Of these the cheapest, simplest and one of the best is as follows:

In this method skim coated fabric is used, the skim coat being of more or less thickness as may be necessary to fill the bead completely when cured. In most cases a skim of 1/32 inch has been found satisfactory. The fabric is cut to the proper length for the bead which is to be made and to the proper width so its two edges will fold over the finished bead and the upper edge of the fabric overlap the lower about ¼ inch when finally folded into place. This strip of fabric is placed around the bead form under tension, so there will be no stretch or buckle in the fabric when rolled down after the bead is completed on the form. A small strip of frictioned tape is placed at the point where the braid is to start. The end of the braid is then placed on this piece of frictioned tape and the tape folded over the braid and from the bottom to hold the braid in place. The braid is then wound around snugly and smoothly two or three times, depending upon the size of the bead being made, and allowed to lap over a very little at the point where the start was made. The braid is then cut off and the piece of frictioned tape is folded down over it from the top to hold the end in place. The fabric is now rolled down, having been folded over the first from the bottom and then from the top. After rolling down the fabric smoothly the

green bead is taken off the form and placed in the bead mold or press and cured. A cure of three to five minutes at about 36 pounds pressure gives an absolutely firm bead.

The following is another method used by some of the largest tire manufacturers. It is similar to the method already described, with the exception that the fabric is placed around the bead form without being rubber coated. The wire braid is run through an insulating tube and wound around the bead form as in the first method. After the proper number of layers has been put in the form the fabric is folded around and the bead goes to the bead mold or press as outlined above.

Pratt Cable Bead

The new Pratt bead cable is a seven-strand cable made by an ingenious machine of one piece of wire without a welded, soldered or brazed joint, and hence is 50 per cent. stronger. The ends of the wire

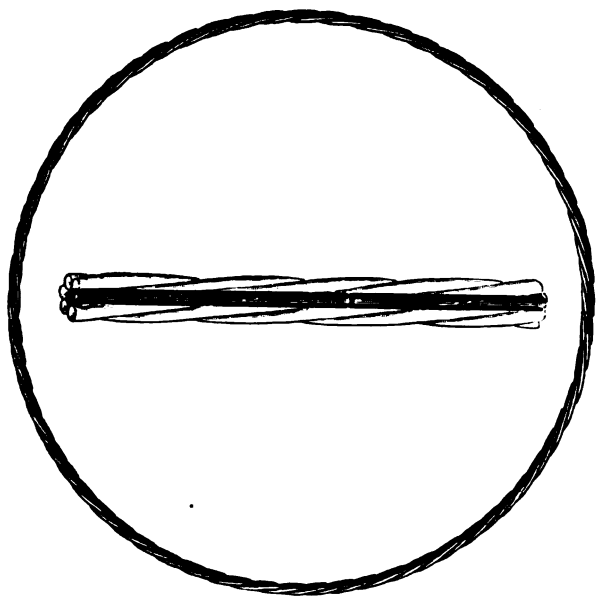

Pratt Cable Bead and Enlarged Section

are inside the finished grommet or cable, where they cannot be seen or get out of place. As there is no weld and the tensile strength of the wire strands is a known factor, within very narrow limits, each completed grommet can be subjected to pressure on an expanding machine up to 75 per cent. of the known bursting point without danger of over-

straining. The pressure applied is three or four times what the cables will be called upon to bear in actual service. Thus every ring is made true to size and absolutely without stretch. Exhaustive tests show it to have the least stretch, least set and highest tensile strength of anything yet devised for straight-side tire beads. They also indicate that there is no slippage whatever and that when the breaking point is reached on the testing machine all the strands give way at once. The results of these tests follow:

Number of Strands	Wire Size	Approximate Cross Section Inches	Tire Sizes Inches	Pounds Pressure to Break Bead
7	.070	3/32	3½	over 7,000
7	.080	1/4	4	over 9,000
7	.090	3/32	4½ and 5	over 11,000

Building Cable Beads Into Tires

Several different methods of installing Pratt bead cables in straight side tires are in successful use according as the tires are of fabric or cord construction and whether the casing is made up with the bead at a single cure or the beads are semi-cured before installation in the casings. Three representative methods are here described.

Method A

In preparing cable beads for use in fabric tires, several cable rings are dipped at one time in a hot solution of Oakite platers' cleaner to remove all grease, oil and dirt, giving a chemically clean surface to which the rubber cement will adhere firmly. A round galvanized tank one foot in depth, piped for water and steam, is employed for the bath, six to eight ounces of the Oakite solution being added to every gallon of water used at boiling temperature. The best method to keep the bath hot is by means of a steam coil. Heating by live steam is not recommended, as the condensation of the steam from an open pipe dilutes the solution, reducing its effectiveness and otherwise long life. The general method of handling the cable rings, is by means of a hoist with a hook that will handle a bundle of cables at one time. The duration of the wash varies from 30 seconds to 3 minutes in different plants. It is the usual custom to follow the wash with a hot rinse, after which the cables are hung up to dry of their own heat.

After drying, the cable rings are rolled, one or several at a time, for their entire circumference, in a trough of thin rubber cement, lifted out with a hook and hung on pegs to drip. The cement trough is a simple wooden or metal affair, V-shaped at the bottom, and requires only a little cement to cover the cables at any time.

The dripped cable rings are taken one at a time to a long table on which strips of raw, uncured, rubber are laid out. These strips are 1/16 inch thick and just wide enough to go around the ring or just a little more when folded into place from each side. The cable ring is rolled along the center of one of these strips, picking up the latter, which is then folded around both sides of the ring. The rubber-covered ring is then rolled along a 2-inch bias strip of frictioned fabric which is folded down securely and pressed firmly in contact with the ring with a hand stitcher.

Finally another 2-inch strip of fabric is laid along the side of the covered cable ring and pressed tight. This begins at the inside of the ring and extends up above the top of the flap formed by the first strip of fabric, making a strong double flap to tie into the body of the casing when the latter is built up in the usual manner.

METHOD B

In building cord tires the oakite cleaning bath is used, followed by dipping in a very heavy rubber cement. When dry enough to handle, the ring goes direct to the tire builder and is used as follows: The first and second layers of cord fabric are placed together on the tire building form. The edges of these layers come down at each side about one inch farther than do the third and fourth layers of cord fabric, which are placed over the first and second layers.

The cement-coated ring is now put in place on top of the four fabric layers, and the edges of the third and fourth cord fabric layers are turned up around the cable ring and securely rolled and cemented down into place, extending all the way around, about one inch up the side of the casing above the ring. The fifth and sixth layers of cord fabric are next put on and come down just to the ring at the bead, and are cut off smooth at that point.

Right below the ring, directly against it and on top of the first and second layers of cord fabric is now laid a round strip of 7/32-inch diameter raw gum. The edges of the first and second layers of cord fabric are then folded up over the round strip of raw stock, over the bead cable, and extend up the side of the casing about 2 inches, where they are securely rolled down.

The seventh and eighth layers of cord fabric are next put on, properly rolled down and the edges folded smoothly down around under the bead and run up the inside of the casing about one inch above the bead. A thin piece of fabric, known as the "HS", is then started at the outside of the casing about one inch above the bead, folded down around under it and up inside the casing, thus completing the bead.

Method D

When the beads are to be semi-cured before they are built into the casing, the cable ring is cleaned and cemented, according to Method A, after which a strip of skim-coated fabric is wrapped around it. The L-shaped bead form is then prepared with another strip of skim-coated fabric and the wrapped ring is pressed into place on the bead form. Narrow strips of raw rubber are then placed along the top and bottom of the ring to fill the space as may be necessary, and the flaps of the strip of skim-coated fabric first laid on the bead form are snugly folded up from the bottom and down from the top, thus giving the bead a somewhat triangular form, ready to be semi-cured in true triangular shape in a bead mold.

Bead Making Machines

The following are briefs of the important bead making machines:

Johnstone String Bead Core Forming Machine

One of the earliest devices for building up the cores of pneumatic tire beads was the Johnstone machine, which wound several layers of rubber solutioned string in proper place on the tire carcass, after which the edges of the bias fabric were turned over the string and the bead thus formed was shaped by suitable rollers.

Seiberling-State Bead Mold

Beads formed by winding material from a continuous strip into circular form on the tire building core in an uncured condition are never exactly the same size when applied, and the rolling of the tire edge in the finishing operation stretches, and distorts the beads. With the Seiberling-State bead mold the bead is constructed in annular form, of correct size and proper cross sectional shape, and semi-cured to harden it before application to the tire carcass, thus insuring a snug fit for straight-side tires with inextensible edges.

In building the inextensible bead, an annular form is used having a circular depressed groove of proper diameter and the shape in cross section to be given to the bead. A strip of frictioned fabric is first placed in the bottom of the groove. Two or three layers of flat wire tape coated with rubber are next wound in the groove and some filling strips are wound in the places left between the tape. Then the edges of the frictioned fabric are turned over to cover the work, the bead is transferred to a vulcanizing mold having a groove corresponding to that of the building form, the cover is clamped down and the bead semi-cured in a vulcanizer.

Tyler-Nall Tire Bead Machine

This machine takes a rubber clincher bead core from a supply reel, feeds it through trimming rolls, through a cement tank, and then

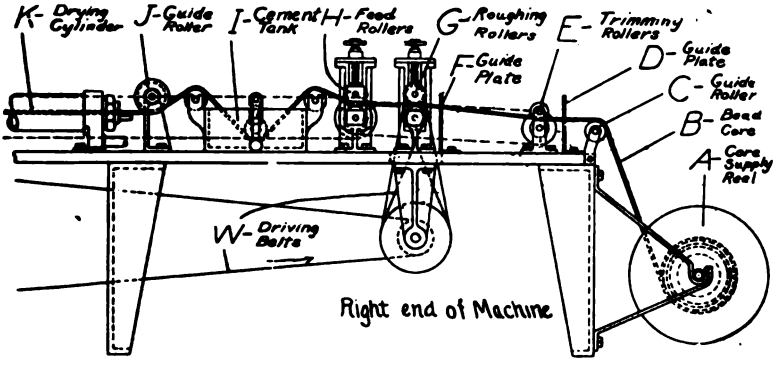

Tyler-Nall Bead Machine

through a long drying cylinder. The strip of frictioned fabric is then folded longitudinally around it by a series of guide plates and rollers.

In the side elevation shown, the upper drawing is the front end, and the lower drawing the left end of the machine. From the supply reel *A* the core *B* passes over a guide roller *C*, through a guide plate

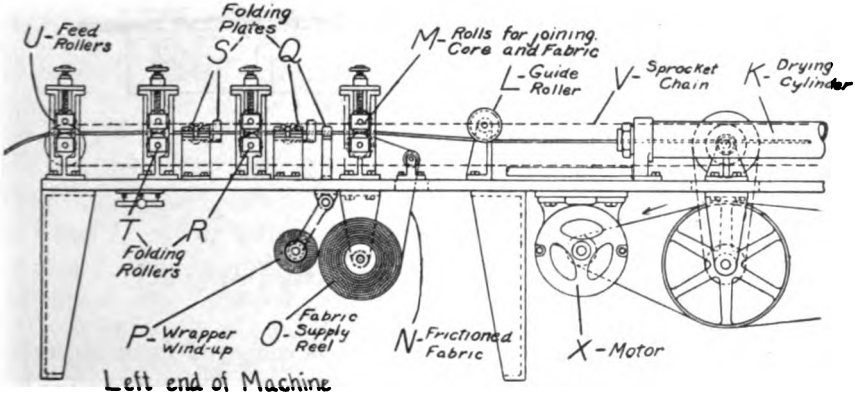

Tyler-Nall Bead Machine

D, and between trimming rollers *E*, where the surplus rubber is trimmed away. It then goes through a guide plate *F* and between roughing rolls *G* which prepare it for receiving a coating of cement. The core is passed between feed rollers *H* and through a tank *I* where

it receives a coating of cement. From the tank it passes under a guide roller *J* and through a long, steam-jacketed drying cylinder *K*. Here the drying is hastened by forcing compressed air into the cylinder. From the dryer the core passes under a guide roller *L* and between rollers *M*, where it is brought in contact with the center of the upper surface of the strip of frictioned fabric *N* from the supply reel *O*, the muslin wrapper being wound up at *P*.

The core and fabric then pass through folding plates *Q*, rollers *R*, folding plates *S* and rollers *T*, which wrap the strip completely around the core and press it down firmly. The completed tire bead then passes between feed rollers *U* and away from the machine. The various feed rollers, trimmers and folding rollers are driven through a sprocket chain *V* running the entire length of the machine, and belts *W*, from an electric motor *X* suspended by hangers under the frame. All driven parts are geared to feed the core at the same speed.

Gammeter Tire Bead Forming and Covering Apparatus

The complete apparatus consists of a tubing machine for extruding a bead core of desired cross section, and an endless belt for conveying it from the tubing machine to the covering mechanism, which

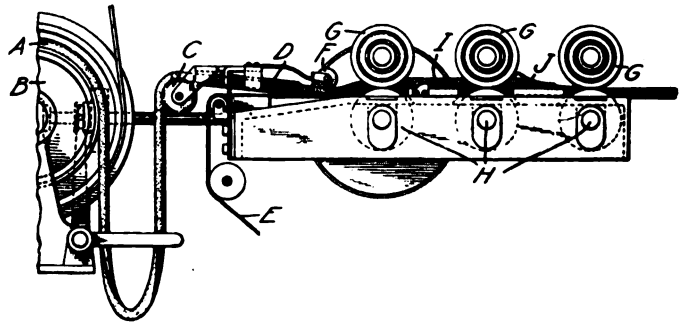

Gammeter Bead Forming and Covering Apparatus

is shown in the illustration. The core *A* is conveyed from the tubing machine by the endless belt, which passes around the pulley *B*. It is then delivered to the covering machine supported by guide roller *C* and advance guide *D*. The strip of frictioned fabric *E* passes over guide rollers and underneath the core, which is pressed against it by the roller *F*. As the core and fabric pass between the presser rollers *G* and the forming rollers *H*, the bead is formed and the fabric folded over it by the guides *I* and *J*.

Stevens Bead Forming Machine

The drawings herewith show a side view, partly in section, and a top view of a machine that forms four beads simultaneously from narrow strips of impregnated fabric.

The fabric used in this process is made in a sheet 44 inches wide, being composed mostly of strong, longitudinal threads and comparatively few weft threads, of less strength, so that the fabric may be easily slit into strips. The fabric *A* is unwound from a supply roll *B*,

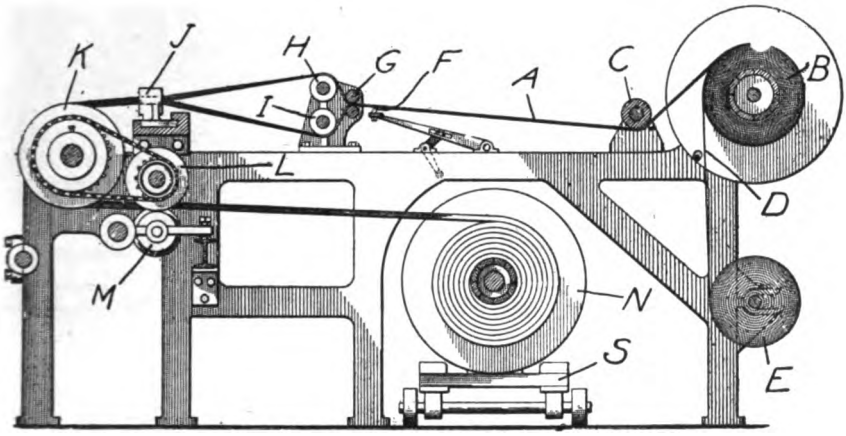

Side View of Stevens' Bead Forming Machine

and is passed under a guide roller *C*. The liner sheet *D* is wound up on a reel *E*. The fabric passes over a series of knives *F*, 175 in number, and is slit back for a distance of about 2 feet, into strips ¼ of an inch in width. The ends of these strips are passed between presser rolls *G* and then, alternately, one above the roller *H*, and the other below the roller *I*. After being thus separated the strips are led into bunching dies *J*, four in number, where they are gathered into four groups and passed into V-shaped grooves in the fillet forming wheels *K*. The rubber with which the fabric is impregnated is unvulcanized and still tacky and helps hold the beads in shape after leaving the grooved wheels *K*. The four beads then pass between grooved rollers *L* and pressure rollers *M*, which give them final shape. The speed of this last set of rollers is greater than that of the wheels *K*, so that in addition to being compressed, the beads are subjected to a tension to remove the slack from the warp threads. The completed beads are wound up on reels *N*, mounted on a car *S*. When the reels are full the

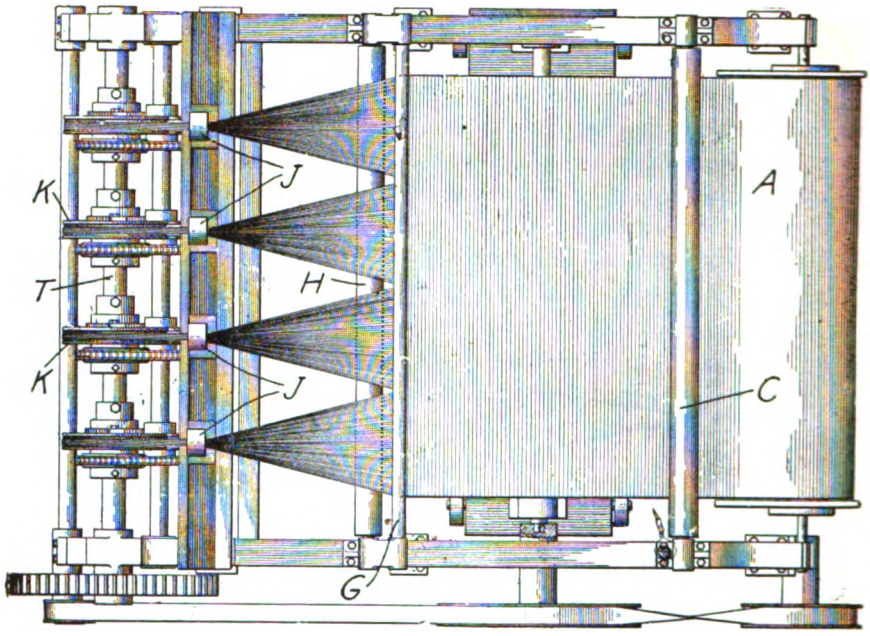

PLAN VIEW OF STEVENS BEAD FORMING MACHINE

shaft is disengaged from the driving mechanism, and the car is run from under the machine frame.

When the fabric is first led from the supply roll and slit by means of the knives *F*, these knives are lowered out of contact with the fabric, which is then slit by the rollers *H* and *I*. The forming rollers and bunching dies are mounted on splined shafts, so that they may be adjusted longitudinally in case more or less than 44 strips are to be used in forming the beads. Between each of the grooved wheels *K* and their common shaft *T*, is a ratchet connection, by means of which the operator may turn any of the wheels independent of the others, in order to maintain a uniform tension in all of the four groups of strips.

STEVENS BEAD FABRIC TEARING DEVICE

This consists of a series of clamps that firmly grip the front edge of the cloth and are as wide as the strips into which the frictioned fabric is to be torn. Alternate clamps hold the fabric stationary, while intermediate clamps are fixed to a movable bar which accomplishes the preliminary tearing when moved backward by the operator. The lever carrying the upper and lower tearing rollers is then swung in place

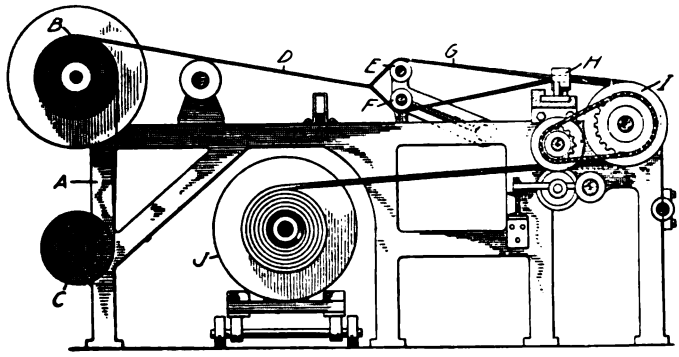

STEVENS BEAD FABRIC TEARING DEVICE

A—Side Frames. **B**—Fabric Roll. **C**—Liner Roll. **D**—Frictioned Fabric. **E**—Upper Tearing Roller. **F**—Lower Tearing Roller. **G**—Torn Strips. **H**—Forming Die. **I**—Bead Forming Sheave. **J**—Bead Spools.

and the torn strips released from the alternate clamps and passed around the lower tearing roller, while those from the intermediate clamps are passed over the upper tearing roller and are then united in sufficient number to form beads. When the machine is started the tearing action

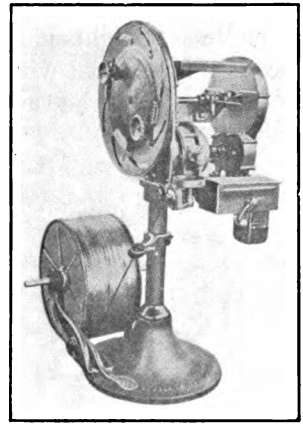

GILLETTE BEAD MACHINE

is continuous, and the beads are passed through the forming dies and the bead forming sheaves to the spools.

GILLETTE WIRE BEAD CORE MAKING MACHINE

This machine is very easily understood. In it the wire is fed from a stock-reel to an expansion head, whereby any size of bead from

31 by 5 inches to 38 by 5½ inches may be formed. The machine is equipped with a direct motor-drive and starting switch.

Brucker Bead Wire Forming Machine

By means of this machine a number of wire strands are wound on a form wheel by setting a stop bracket at a point indicated on a scale. When the indicated number of revolutions has been wound on the form wheel the machine stops automatically.

Kremer Bead Wrapping Machine

The endless core of the bead, made up of five wire strands, is placed in this machine, which stretches and wraps around it spirally two overlapped layers of frictioned tape, grooved rollers at the same time giving the bead its desired shape.

Midgley Bead Wrapping Machine

This in brief is an endless wire hoop which is expanded to nearly the contour of a circle by a series of concentric pulleys which carry it in a circular path through a rotary shuttle that applies the tape helically on the hoop.

Kuentzel Bead Forming Machine

With this machine endless straight-side and clincher tire beads are made of threads or cords impregnated with rubber by a continuous winding process. In the drawing, *A* is the vacuum chamber, *B* the con-

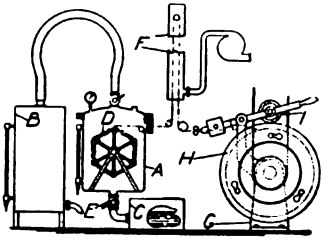

Kuentzel Bead Former

denser that produces the vacuum, and *C* the rubber solution tank. The thread or cord is arranged on a reel *D*, journaled on bearings within the vacuum tank. When the valve *E* is opened, the partial vacuum causes the solution to flow from the tank into the vacuum chamber, submerging all or part of the reel of thread.

The impregnated cord then passes out of the chamber; through a drying apparatus *F*, to the bead-forming machine *G*. This consists of

a short belt-driven shaft journaled in a suitable frame with an annular bead mold *H* keyed to the outer end. A lining of frictioned fabric is placed in the groove of the bead mold, the end of the impregnated cord is adhered to the lining, and the mold revolved until sufficient cord has been coiled to form the bead. During the winding operation the hand-operated pressure roller *I* is introduced into the groove of the bead mold, firmly compacting the threads. The finished bead is released from the mold by detaching the outer ring.

Southwark Goose Neck Tire Bead Press

What is known as the goose neck press is a very convenient type for tire bead manufacture, as bead molds can be handled very expeditiously. The press has a cast iron housing heavily built and ribbed

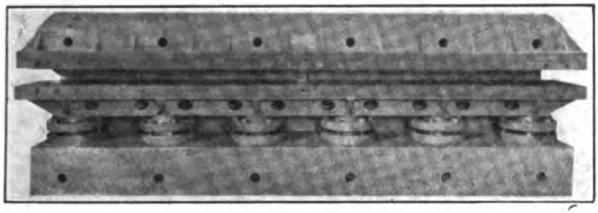

Southwark Goose Neck Bead Press

to withstand without deflection the full pressure of 250 tons when applied by the powerful rams. The cast steel ram cylinders are rigidly supported in the base of the housings and the six hydraulic rams operate in perfect unison in raising and lowering the steam platen. This is 24 inches wide and 16 feet long, chambered for steam and attached so that the expansion due to heat is provided for. The top platen is of the same dimensions, similarly constructed and attached to the upper part of the housing. This is for straight beads only, of course.

Southwark Quick Acting Tire Bead Press

Because of its unusual construction this special type of quick acting press for curing beads in annular molds before they are applied to the tire carcass has certain advantages.

The moving table is controlled by air cylinders, thus permitting it is to be moved in and out very quickly. It is sufficiently long to permit the bead being taken out and a new one inserted for pressing, while the press is doing actual work. The press is made entirely of steel castings instead of built-up beams and cylinders. A very low, moving table makes it unnecessary to lift the molds, thus making handling

easier. The ram is brought down to the work through idle stroke with tank water so that no power is required except for actual work. The

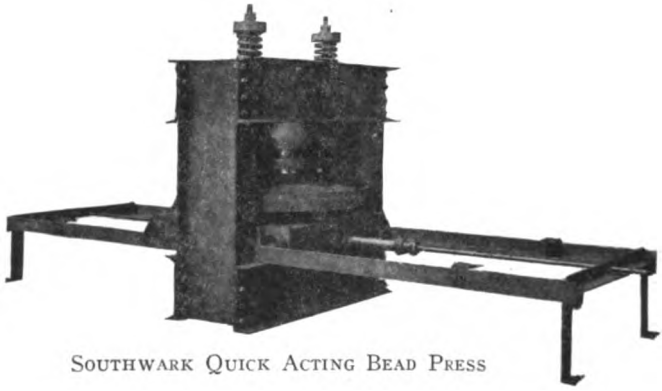

SOUTHWARK QUICK ACTING BEAD PRESS

press is controlled by a patented operating valve so designed that when the press is at rest the water is automatically by-passed.

McNEILL BEAD DRYING APPARATUS

This comprises a revoluble magazine, revoluble wheels on the magazine on the beads, heating means inside the magazine, a casing for the magazine having a receiving end and a discharge end for the beads, and drive means for imparting step rotation to the magazine including a rack device, a driving pinion engaging the rack device and a rod adapted to throw the drive means into and out of operation and operable from both the receiving and discharge ends of the casing.

MEIR BEAD TRIMMER

On shaft *a* are the cutting disks *b*. These engage channels *c* of drum *d*, which has additional channels for receiving the beads. Drum *d* is keyed to shaft *f*, which is driven by belt pulley *g*. Shaft *a* is driven from shaft *f* by gears *h*. Grooves *k* in drum *d* feed the tire to the cutting disks. The cutting disks *b* are adjusted by hand screws *m*.

MIDGLEY TIRE BEAD TRIMMING MACHINE

Molded beads are substantially triangular in cross section and the excess material on two of the edges known as "flash" must be trimmed off to make them serviceable. When performed by hand, this

is a comparatively slow operation and one that is not always productive of uniform results.

Midgley's machine provides a base *A* on which are mounted two pairs of curved brackets *B*, adjustable to and from each other by set screws *C*, and supporting two shafts *D*, *D*, each of which carries four

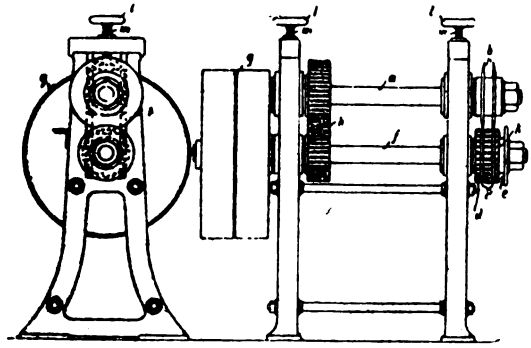

MEIR BEAD TRIMMER

curved cutter blades *E*, *E*. The bead guide block *F*, adjustable longitudinally, is triangular in cross section and supports the trough-like bead support *G*. Stationary cutters *H*, *H*, vertically adjustable, are attached to the inclined sides of the guide block and a bar *I* restricts the bead to longitudinal movement.

In operation the cutter blades rotate toward each other with a downward cut and exert a shearing action, in connection with the

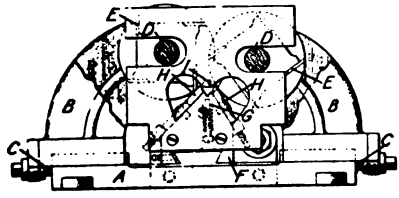

MIDGLEY BEAD TRIMMER

stationary blades, on the bead as it passes through the machine, removing the "flash" in an effective manner.

MIDGLEY BEAD CLEANING MACHINE

Beads are repeatedly passed through guides having helical grooves which present the different faces of the beads to the buffing wheels that remove dust and bloom.

Bridgewater Tire Bead Trimmer

The machine is simple to operate and in fact it is said that one boy can handle the bead output of the average tire plant on this trimmer. Reduced to figures, the makers claim that this machine will trim

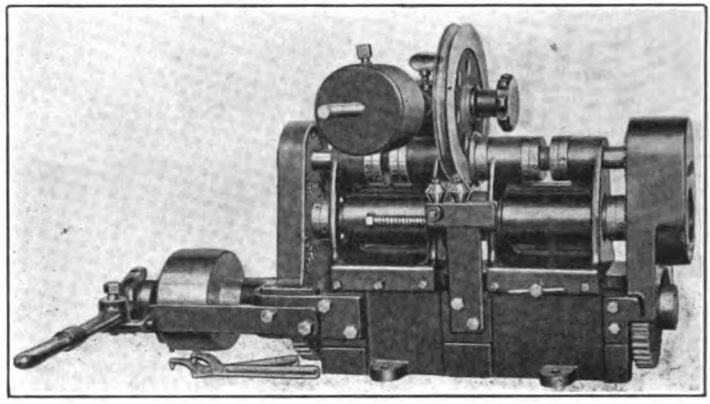

Bridgewater Tire Bead Trimmer

about 90 feet of clincher bead per minute and 15 feet of straight side bead per minute.

Thropp Bead Adjusting Device

In making a clincher tire it is very important that the beads should be located exactly in the right position. This is accomplished by Thropp's invention after the following method: The tire casing *B*

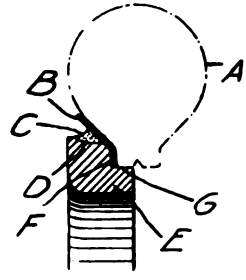

Thropp Bead Adjuster

is laid on the core *A* in the usual manner. The bead is then placed in position on the shallow curved recess *D* on the bead adjusting ring *E*. The latter may then be moved laterally into position with respect to

the core, and the ring itself adjusted accurately in position by the entrance of the shoulder *G* within the inner wall of the core. When pressed laterally against the casing, the base of the bead will be brought into contact with it, causing the bead to adhere to the tire casing, which is formed of unvulcanized rubber. The bead adjusting ring may then be removed, leaving the bead in its proper position with respect to the core and the tire casing.

Gammeter Bead Centering Device

This consists of a ring provided with an annular recess conforming to the contour of the finished bead. The ring is centered by three shouldered brackets or arms which slide within the inner circumference of the core. When the ring is revolved the bead is laid on the casing and accurately centered with relation to the tire. The other bead is applied in the same way.

CHAPTER XVI

BUILDING AND VULCANIZING CORES

THE annular, hollow, cast iron cores or mandrels having the size and shape in cross section which it is desired to give to the completed tire, and upon which pneumatic tire casings are built up. and often vulcanized subsequently, have been produced in great variety. In order to facilitate their ready removal after vulcanization from tire casings having inextensible edges, most cores now consist of several collapsible segments with means for retaining the parts in annular form while in use. It is chiefly in the fastenings that the various cores differ.

In use, the assembled core is supported by a chuck or spider, much like the hub and spokes of a wheel, the hub being revolvably attached to the building stand when tires are made by hand, or to the carcass building, tread applying and other machines when tires are made chiefly by mechanical means.

Thropp Tire Core

One of the earlier forms for building up and vulcanizing clincher tires is the Thropp core, the tread position of which is flattened and the sides are gradually tapered to form the clincher edges of the tire in substantially the position which these parts occupy when in use. On

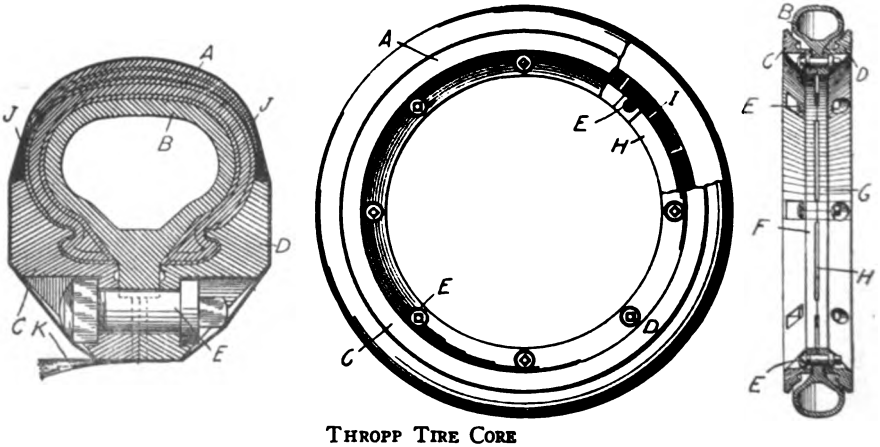

Thropp Tire Core

each side of the tire *A*, after the latter has been placed on the core *B*, are mounted two pressure rings *C* and *D*. These rings are clamped against the sides of the tire and the tongue of the core by means of bolts *E*. The upper edges of these rings are made thick to provide strength, while their inner flanges *F* and *G* are separated at intervals by slots *H*. These slots communicate with holes *I* in the tongue of the core, thereby forming passages from the outside to the interior of the core. When the pressure rings are bolted in position, two filler rings *J* are placed on the sides of the tire and the whole wrapped with tape *K* to hold the tire in position during vulcanization.

Thropp Improved Collapsible Core

This is a boltless and ringless core for curing and making straight side and quick detachable clincher tires. The joints between the sections of the core have a steel plate so that they will not break off in handling, leaving a mark on the inside of tire. The locking device is arranged with a hinged locking plate between each joint; has one straight pin to hinge it, and three taper pins to lock it.

After putting the ends of the core together, the lock plate is pressed into place and the taper pins are put in the holes, driving them in lightly with a hammer. The core is then ready for use.

To open the core, the three taper pins are driven out of the holes in each plate with a light hammer and small pin drift. An opener wrench is then pressed in the notch in the locking plate, and the latter pulled open, when the core will collapse.

Young Removable Core

Among the early collapsible cores to facilitate removal of the finished tire was the Young removable core. It consisted of an annular mandrel made in two parts. After vulcanization the tire was slit open so that the smaller part of the mandrel might be removed, after which the remainder of the mandrel was easily withdrawn.

State Collapsible Core

Another of the early collapsible types was the State core. Referring to the drawing, on the following page, which shows a cross section of the construction, the annular core or mandrel *A* is provided on its inner face with projecting edges separated at intervals from each other and at other portions connected together by integrally formed lugs. The core is preferably divided into four separable segments, two large and two small, in order that the several parts may be withdrawn successively from the completed tire through the

opening along its inner or rim face. The lines of severance between the two smaller segments and the balance of the core are formed oblique to the radii in such a manner that the outer or peripheral length of these segments is greater than the inner, so as to facilitate their removal from the remainder of the core. Steel plates cover the abutting ends of the core segments, making their contact smoother and reducing the wear incident to their use.

The inner projecting edges *B* of the core are formed with an inclined face and the extreme inner portions are enlarged, constituting an annular beading. Two rings, identically alike and having channels on one of their faces engaging the annular beading of the core, clamp the four segments firmly together while in use and

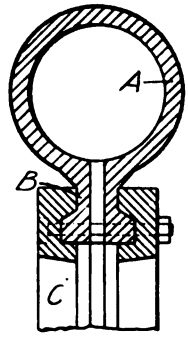

STATE CORE

are held in place by six bolts which pass through both the rings and the lugs on the inner edges of the core.

In operation, the core is assembled and the tire casing built up and vulcanized upon it, after which the bolts and the rings are removed. This enables the smaller segments to be drawn inward, when the larger segments may also be readily removed.

STILES-YEMIKER COLLAPSIBLE CORE

The Stiles-Yemiker tire core is designed to provide a means of quickly and easily locking the segments of the mold in position or of unlocking them for removal from the tire. The drawings show the complete core and locking ring, a cross section through the core, and the locking handle. The core is divided into segments *A*, *B*, *C* and *D* in the usual manner. The inwardly extending flange *E* is provided with angular extensions *F*, over which the locking rings *G* fit. One end of each of these rings fits over a pin *H* in the flange *E*, while the other

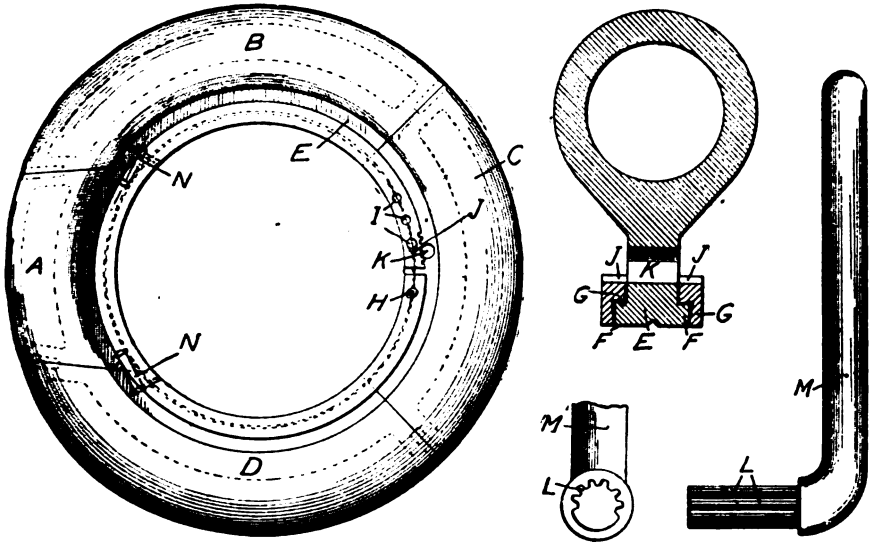

STILES-YEMIKER COLLAPSIBLE CORE

ends of the rings are provided with holes *I* and short-toothed racks *J*. Opposite these racks is a hole *K* in the flange *E* into which fits a gear segment *L* on the handle *M*. When this handle is inserted and turned the ends of the ring are drawn toward each other until the holes *I* are opposite corresponding holes in the core flange *E*. A locking pin is then slipped through one of these openings, thus locking the core segments in position. If one of these locking holes becomes worn another may be used. In order to prevent the segment *A* from slipping out of its position, latches *N* are provided to lock it against the segments *B* and *D*.

CHILDS COLLAPSIBLE CORE

The Childs core consists of four segments forming an annular mandrel when assembled. The inwardly extending flange of each segment has a projection at each end so shaped as to form a semi-circular lug when any two segments are placed in abutting relation. Each of the projections is provided with a semi-circular centrally arranged registering groove which, in conjunction with that of the abutting segment, constitutes a cylindrical opening with its axis positioned on the line of severance between the segments. Concentric with the axes of these openings there is formed on both sides of the lugs semi-circular grooves which unite to form annular grooves with side walls inclined. Adapted

to be mounted in the groove on one side of each of the pairs of united lugs is a clamping washer provided on one face with a projecting annular ridge shaped to seat in the groove. A transversely elongated opening in each washer receives the stem of a clamping bolt which has a T-shaped head of such size as to freely pass through the elongated opening when turned to bring the head into alinement. The opposite faces of the washers are provided with cylindrical recesses which receive the T-shaped head. The arrangement is such that when the head of the bolt is in alinement with the elongated opening the washer is readily removed, but when the head of the bolt is given a quarter turn it seats in the recess of the washer. Positioned on the opposite sides of the lugs is a clamping washer provided with an annular ridge adapted to seat in an annular groove formed in the opposite faces of the lugs. The washers are provided with cylindrical openings to receive the clamping bolts which have threaded ends for clamping nuts. The registering grooves permit the passage through them of the bolt heads.

To assemble the core, the segments are abutted with the grooves of the lugs in proper register, after which the clamping washers are seated in the grooves of the lugs and the bolts are passed through the washers and the latter are clamped in position by the nuts, the bolt heads seating on the floors of the washer recesses. The grooves on opposite sides of the lugs are so shaped that the ridges of the clamping washers will bear against the inclined side walls of the grooves and draw the abutting portions of the lugs together.

To collapse the core, the nuts are released enough to give the bolt heads a quarter turn into alinement with openings and draw the bolts through the washers permitting the various segments of the core to be separated.

Hinman Collapsible Core

Tire cores are often cast in annular form and then cut into segments in order to make them collapsible. This method, however, removes so much of the material that when the segments are assembled the result is that the core does not form a true circle. It is therefore necessary to provide filler blocks on the ends of the segments to compensate for the loss of material in cutting. To secure these filler blocks to the ends of the segments it is necessary to drill and tap holes for screws or dowel pins, involving considerable time and expense. Hinman's core is designed to eliminate the cutting of the core into segments by providing plates in the casting, by means of which the latter may be broken into the required number of segments without loss of time. The core *A* is cast with plates of metal *B* at the points

where it is desired to divide the core into segments. These plates are perforated at *C* so that the metal will flow through and connect the divisions with thin particles of metal which are afterwards easily broken. Since the plates *B* are cold when the hot metal is poured into

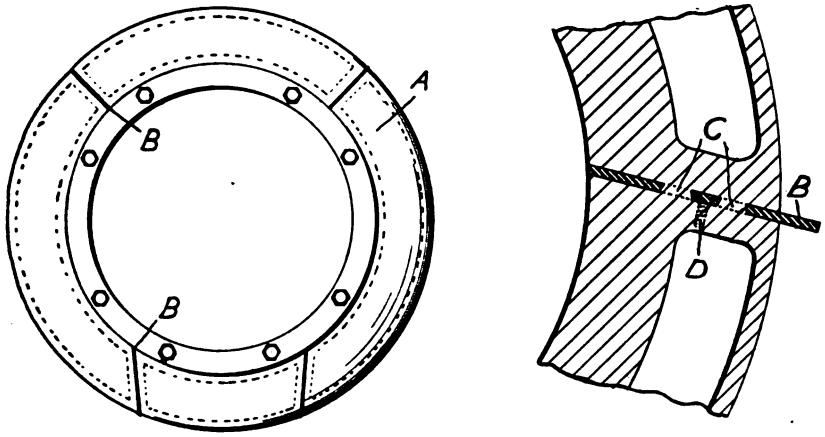

HINMAN COLLAPSIBLE CORE

the mold the two metals will not fuse together. After the core has been cast it is turned to the desired shape and the segments are then broken apart. The plates generally adhere to one of the segments and it may be left in this position. However, if they do not adhere they may be again attached by means of the screw *D*.

Y. S. K. COLLAPSIBLE CORE

The feature of this core is that it eliminates the numerous bolts and nuts employed with many collapsible cores and saves time in assembling and collapsing the core. By a contracting ring the four segments and wedge are held firmly against an unsplit ring. The contracting ring holds the sections from outward motion and the unsplit ring holds them from inward motion. The spider may remain permanently in the unsplit ring, or it may be cast there.

To collapse the core, the taper pin is removed, two pins of the wrench are placed in holes in the contracting ring, the lever is given half a turn and both rings are removed.

To assemble the core, the segments are arranged as with any core, the unsplit ring is placed in position, then the contracting ring, having the elongated hole over the permanent pin. The wrench is then given half a turn and the taper pin dropped in place and driven home.

Duplex Collapsible Core

In the lower illustration are seen all parts of the core, and the section above shows the use of the pinch bar, which is the only tool necessary. The core is of the usual design, with an internal projecting flange. In the upper face of this flange is an annular groove, the inner wall of which is slightly undercut. For retaining the core sections in position, a split spring or expansion ring is employed. The inner edge of this ring is cut at an angle corresponding with the inner

Cross Section of the Duplex Core

face of the groove, and the outer edge is slightly tapered. Over this expansion ring is placed a locking ring, which fits in the groove between the core flange and the expansion ring.

To assemble the core, the sections are placed together on a table and the locking rings placed in position. The upper ring is tapped lightly with the hammer end of the pinch bar, forcing the locking ring into the groove and drawing the sections securely together. To take the

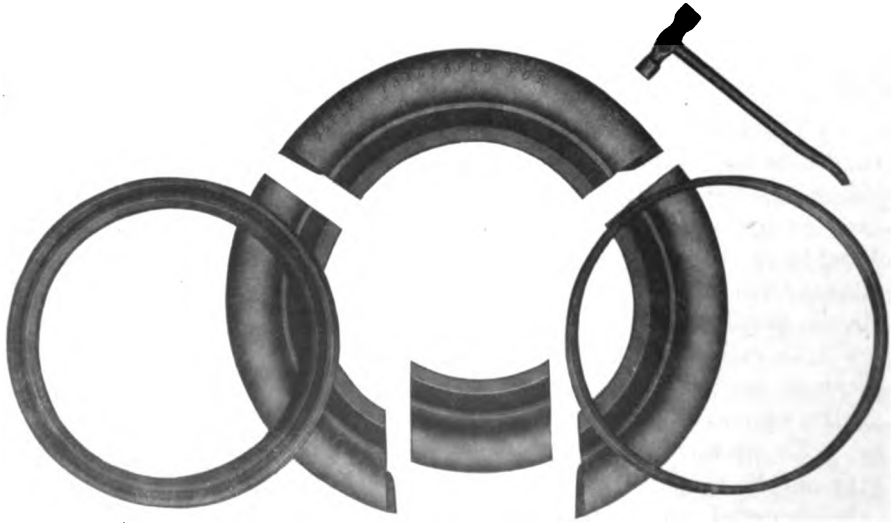

Duplex Collapsible Core

core apart, all that is necessary is to insert the pinch bar between the locking ring and the core flange, in order easily to pry the ring from the groove.

Welton Interlocking Collapsible Core

Light weight and quick operation are the features of this core, metal being removed from the core as well as the rings, between the lugs. It is an excellent building core for cord tires, as the tire can be removed from the building stand without removing the rings from the spider.

The core is cut into the usual segments and each segment may be either single or double end plated. Each segment has two lugs cast integral on the inside circumference which engage with similar lugs

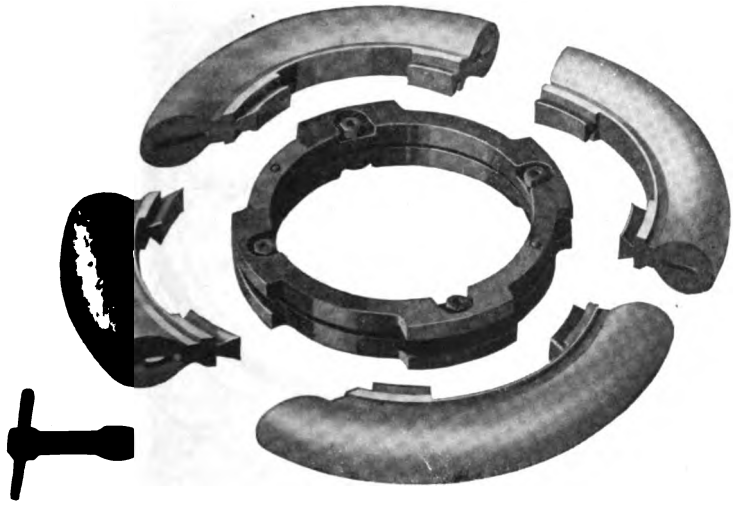

Welton Interlocking Collapsible Core

on the steel rings. The lugs are machined on a taper and have an area equal to one-eighth of the circumference, which insures each segment being drawn into proper alinement.

To dismantle the core after vulcanization of a tire, it is necessary only to loosen the four nuts on each side of the core with the socket wrench, shift the rings one-eighth of a turn and remove the core. The core is assembled by placing the segments together on the tire stripping table and reversing the process. The rings are standard for each size and can be replaced independent of the core or vice versa.

Simplex Collapsible Core

Similar to the Y. S. K. core, the Simplex is a single ring type that is durable, holds its shape, and can be assembled or taken apart in a few seconds. Like other collapsible cores, it is sawed into four sections and is provided with keys and end slots to guard against transverse movements of the sections. The novel feature is the single locking ring which is held in place by leverage and friction only. A circumferential groove with one side tapered is machined into the tongue of each core section and a steel ring is fitted into this groove. When the four sections are placed together and the locking ring forced

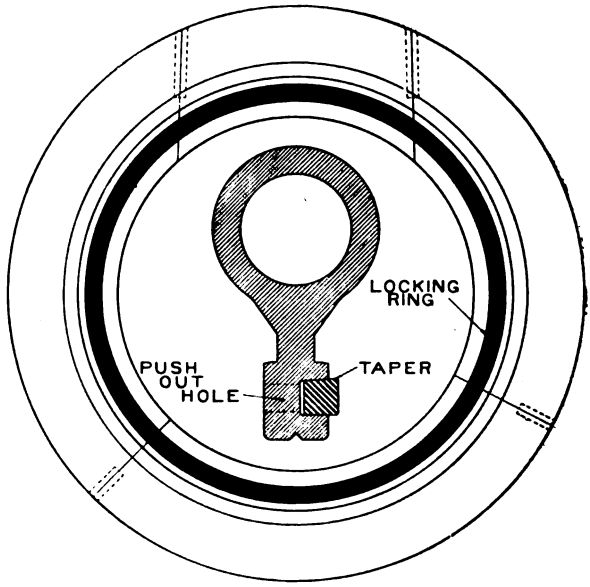

Simplex Collapsible Tire Core

home, the core is drawn up into a perfect circle. The ring prevents radical movement in or out, while the keys in the ends of the sections hold them in alinement. Holes drilled behind the groove afford means of forcing out the ring when the core is to be collapsed. Only five parts are used in the construction of the whole apparatus.

Kuhlke Collapsible Core

The Kuhlke tire core permits the removal of one segment of the core without the necessity of entirely dismantling the whole apparatus. The illustrations show the complete core assembled and also a sec-

tion showing the method of connecting the segments. Each of the segments *A, B, C* and *D* has a flange *E* provided with lugs *F* at each end. These lugs are semi-circular in shape and are cut away so as to form openings *G* to admit bolts *H*. These lugs are provided with circular grooves *I*, into which fit projecting ridges on the inner faces of the lock washers *J*. When the core is assembled and the washers are locked in the grooves *I*, by means of the bolts *H*, the core segments are securely fastened together. After use, and in order to dismantle the core, the nut on bolt *H* between segments *A* and *B* is loosened sufficiently to permit the lock washers to be withdrawn from the

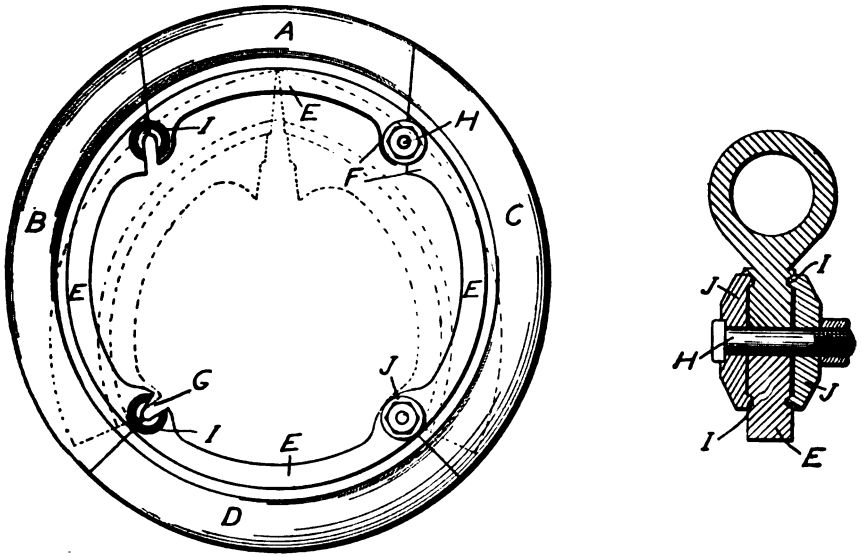

KUHLKE COLLAPSIBLE CORE

grooves *I*. The segment *A* is then removed completely from the tire. After this operation, the nuts on the remaining bolts are loosened sufficiently to permit the segments *B* and *C* to swing inwardly as indicated by the dotted lines, thus causing the lock washers to act as hinges or pivots. If it is desired to completely dismantle the core, this is accomplished by giving the nuts a few turns to disengage the washers from their grooves.

MATHER COLLAPSIBLE CORE

The Mather core may also be taken from the vulcanized tire after one segment has been removed. Upon removal of three tapered pins

and a semi-circular locking member the key segment of the core is removed. Two of the segments are hinged to a third segment by means of the complemental flange ears and the pivot bolts, and may be swung together so that the balance of the core is readily removed from the tire.

Adamson Collapsible Core

The Adamson core has a locking ring that can be used on the other side of the core when the flanges become worn. The four hollow segments, one of which is wedge shaped, are alined by interlocking keys and grooves. The locking ring is channeled to fit the core flanges, and wedges the segments of the core into perfect alinement, these being held by two conical pointed set screws. On the inner surface of the locking ring there is a V-groove for supporting the core on the chuck.

Another Adamson core has fixed locking keys and locking bolts, operated by conical pointed set screws. There are no loose parts, all being located within or attached to the four segments of the core. The abutting ends of the segments are recessed to receive a broad, flat key, which is attached to one of the segments. In the opposite segment are recessed spring bolts with slots that engage the lower lips of the keys. Headless set screws with conical points engage the conical recesses in the bolts. The segments are assembled and alined by the keys. The set screws being loosened, the spring bolts engage the keys. The set screws are then tightened, drawing the segments together. Dowel pins are inserted through the flanges at the joints, and the core is ready for the casing.

Coleman Collapsible Core

This consists of a rounded rim that corresponds with the body of the casing, a reduced neck and a broadened base to support the beads. The core is formed in four sections which are collapsed after the tire is formed, and withdrawn successively through the inner opening of the casing. When the sections are assembled they are held in alinement by a removable annular ring which is channeled to fit the flanges of one side of the core. The inner circumference of the core sections has tapered recesses that fit the four wedge shaped blocks through which pass the locking bolts. These also pass through angle plates attached to the annular locking ring and are threaded and provided with hexagon nuts on their outer ends.

The core is assembled by placing the locking ring on the core sections with the wedge blocks within the recesses, which are tightened by rotation. After the tire has been formed the securing plate and blocks are moved upwardly in the inclined recesses until the bolts

and blocks are opposite the outlet of the recesses. Then the plates, blocks and ring are removed, which leaves ample space for the withdrawal of the core by removing one section at a time.

Naylor Collapsible Core

Each of the four sections of this core has a socket at one end and a projecting rib at the other. These engage and aline the sections when they are brought together to form the core. On the inner surface of each section are slots that register with similar slots in the adjoining section. These receive the locking plates, which are held in position by taper pins when the core is assembled. To remove the core the taper pins are driven out and the locking plates removed; when the sections can be withdrawn from the finished casing.

Horton-Wagner Collapsible Core

This core is formed of a plurality of sections fastened together by fixed and expanding rings.

Bacher Collapsible Core

The separate segments are cast in dry sand molds and then assembled, producing a complete collapsible core; the customary way being to first make the core and then cut it into segments.

Kuhlke Collapsible Core Locking Device

The locking ring is split and the ends are drawn together by the bolt-shaped locking device. This alines the sections of the core and locks them in place.

Chalfant-Haun Sheet Metal Collapsible Core

The core sections are chambered for steam, and have relatively thin walls as compared with the heavy cast iron sections of the ordinary core.

Welton Collapsible Core

The adjacent ends of the four sections have slotted flanges and are held in alinement by flange plates which are slotted to receive the clamping bolts. In assembling the core three sections are placed together and the bolts moved in locking position and fastened. The key section is then alined and the bolts slid in place and fastened. In removing the core from the casing the bolts are loosened and slid out of the locking position, and the key section removed. The other sections are then easily removed from the casing.

The four segments of another Welton collapsible core are held together by two wedged rings fitting into an undercut annular groove

in the flange about the inner circumference of the core. A split ring is first fitted into the undercut of the groove, after which a binding and centering ring, tapered to fit the balance of the groove in the flange and having on its under side another annular groove fitting over the split ring, is hammered into place. Both rings are applied from the same side of the core so that turning is unnecessary. Wear is taken up by driving the binding ring farther down into the groove, and eventually further use may be had by substituting a new split or binding ring for the worn one.

Midgley Collapsible Core

The unusual feature in the making of this core consists in stamping up a series of thin sheet steel plates that have been prepared so they will adhere to molten iron and casting them in the usual core sand mold. The sections are held in alinement by four plugs that occupy the bolt

Midgley Collapsible Core

holes and are cast integral with the core. These are afterward drilled out, forming holes for the retaining bolts of the core, which is then machined in the usual manner. The interlocking joints are strong and the method of assembling and retaining the core very simple, as shown in the illustration.

Cole Collapsible Core

The drawing on the left is a front elevation, and on the right is an enlarged cross section of a collapsible core. The four core segments indicated by *A* are provided with the usual web *B*, terminating on the inner circumference with a projection *C*, that fits the groove in the outer annular clamping ring *D*.

When the core segments are assembled on the ring, they are held in alinement by the four plates *E* that are clamped by eight bolts *F*.

When the casing is removed from the mold, after curing, the bolts are loosened and the plates withdrawn inwardly, which permits the removal of the core segments from the interior of the shaft in the usual manner.

Wood-Milne Collapsible Core

In this core made to collapse by the removal of a wedge piece, the wedge piece is withdrawn by means of a right and left hand screw working two arms pivoted respectively to the wedge piece and a short

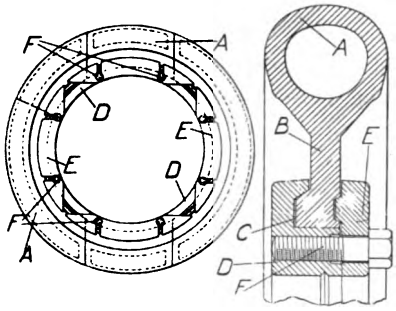

Cole Collapsible Core

segment of the core, to opposite sides of which two longer segments of the core are hinged. In a modification, the two longer segments of the core may be hinged together instead of to a third segment.

De Mattia Collapsible Tire-Building Form

The De Mattia collapsible tire-building form is unique in design and simple in operation. It is specially adapted for use in making

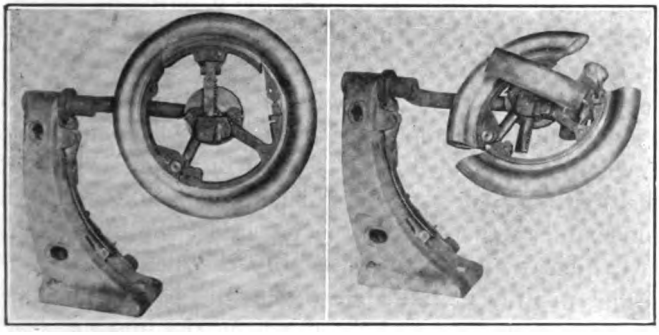

De Mattia Tire-Building Form

Closed Open

tires which are cured in molds on air bags, because by its collapsible construction it can be so folded upon itself that the unvulcanized tire can be removed with little effort from the form without stretching the beads or other damage. Its introduction has facilitated the employ-

ment of women as tire builders on account of the simplicity of its operation.

The form is very easily and quickly changed from closed to collapsed position by drawing inwardly the upper sliding section by means of a rack and pinion actuated by a hand socket wrench. The section is then folded over toward the center on a hinge and each hinged section is in turn folded as shown in the view on the right. When the form is in this position the tire can be easily lifted from it without strain or distortion.

Internal Pressure Cores

Several tire cores and mandrels of various design have been developed to exert an internal pressure within the tire casing during vulcanization, thereby shaping the whole tire structure uniformly against the inner surface of the mold. Some of these employ fluids under pressure, while others are expanded by mechanical means. Air bags for vulcanizing cord tires are also internal pressure cores.

Gray Expansible Mandrel and Mold

By this invention tire covers are molded and vulcanized approximately in the shape which they are subsequently to assume when in use. The cover is built up on a mandrel in the usual way and then placed in a mold of suitable construction, a flexible expansible mandrel being disposed within the cover. Hydraulic pressure is then applied so as to expand the mandrel and effect the molding of the cover. Vulcanization may be simultaneous with the molding, but preferably follows it at a lower pressure.

In operation, the tire cover with its beads is arranged within the two-part metal mold. Inside the cover is disposed the flexible expansible chamber which is provided with a tube in which is a cock through which the hydraulic pressure can be applied to the interior of the expansible chamber, thereby forcing it against the inner surface of the tire cover, which is in turn forced against the mold.

In order to prevent the edges of the tire cover being damaged by nipping between the mold and the flange on the inner end of the tube, the latter is provided with a flange or circumferential rib which lies in a corresponding recess in the mold. The tube is thus prevented from being thrust endwise by the pressure on the mandrel.

Dees Collapsible Fluid Pressure Core

This core is in four sections, joined by wedge keys and has an annular water groove on the periphery. An inlet conveys water under

pressure to this groove and the same pipe acts as a drain. The tire is built up on the core and wrapped or placed in a mold. Before or during vulcanizing water is forced between the core and the tire, which stretches the fabric. A small quantity of water produces the desired result.

Dees Mechanical Pressure Core

The Dees mechanical pressure core consists of four long sections alternating with four short wedge sections, all of which are fastened together in annular arrangement by means of top screws ready for building up the tire carcass. When the casing is ready to be cured, the top screws are removed, the casing with the core inside is placed in a mold and laid on the platen of an hydraulic press vulcanizer. A center block is placed on the auxiliary piston and four spring arms are inserted between the center block and each of the four wedge sections. Other molds, blocks and spring arms are successively added one above the other until the heater is full. The head is then locked in place, pressure is applied to the molds by the main ram and live steam is admitted to the heater. Pressure is then applied to the auxiliary piston, which raises the center blocks, spreading the spring arms radially. This drives the wedge sections of the core, stretches the fabric of the carcass and shapes the tire and tread against the inner walls of the mold.

Johnson-Gammeter Vulcanizing Bag

This is an annular fluid pressure bag which is employed in vulcanizing cord tires, to hold them in an expanded condition while being cured. Referring to the illustration, *A* is an annular inflatable bag

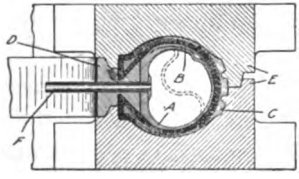

Johnson-Gammeter Vulcanizing Bag

made of frictioned fabric, suitably reinforced and thickened at the base or inner wall by extra plies of fabric. The shield *B* is composed of the same materials and is attached by its inner margin to the base of the bag, forming a continuous annular flap. This is prevented from adhering to the bag during vulcanization by dusting the surfaces with talc.

Afterwards the collapsed bag is inserted in the casing *C*, the head ring *D* is applied and the tire placed in the vulcanizing mold *E*. The bag is then inflated by fluid pressure applied through the tube *F*, transmitting uniform pressure through the shield flap, to all adjacent parts of the inner tire wall. Thus, ridges in the latter are avoided, and at the same time the shield acts as a protector against possible overheating of the vulcanizing bag.

Denman Collapsible Fluid Pressure Core

Referring to the drawing, *A* is the collapsible core, *B* the valve stems and *C* a fluid-tight tubular casing of rubberized fabric that is placed over the core and provided with openings for the valve stems. At the outer end of each valve stem the tubular casing is held between

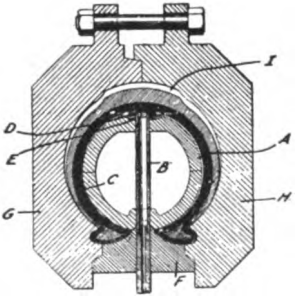

Denman Fluid Pressure Core

two circular washers *D* and *E*. The sectional retaining ring *F* is provided with openings for the valves, and when the two mold halves *G* and *H* are bolted together a space *I* is left between the casing and the inner surface of the mold.

When the fluid pressure is applied through the valve stems the steam or hot water is discharged between the inner surface of the tire and the fluid-tight tubular casing surrounding the core. Thus the continued pressure forces the tire against the inner mold surfaces during the period of vulcanization.

Gammeter Internal Pressure Core

Hollow rubber articles are cured while subjected to internal fluid pressure, according to this invention, which is here illustrated and described, as applied to the making of tire casings. The drawing is a cross-section of a two-part tire mold *A*, showing casing *B*, core *C*, and the round flask *D*, containing carbon dioxide.

The flask is charged in a separate apparatus and a fusible plug *E*, inserted. One end of the flask is connected to the pipe *F* that conveys the gas under pressure to the space between the core and the casing. The other end of the flask is supported by a stud *G*.

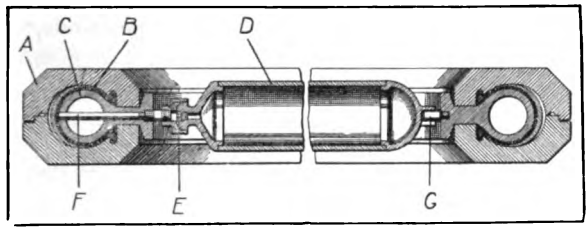

GAMMETER INTERNAL PRESSURE CORE

The heat of the steam immediately melts the plug and releases the gas, which applies pressure to the inner part of the casing during vulcanization.

COBB COLLAPSIBLE FLUID PRESSURE CORE

In curing tires when internal pressure is applied from a general source the necessary pipes and couplings and the possibility of leakage are features more or less objectionable. The gas or vapor under

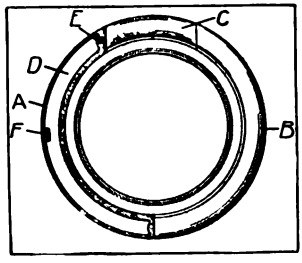

COBB FLUID PRESSURE CORE

pressure is confined within the Cobb core until liberated by the action of a fusible plug.

The core is formed in three hollow sections *A*, *B* and *C*. Sections *A* and *B* are similarly constructed and the description of the former therefore will apply to the latter. The hollow chamber *D* is provided with an inlet valve *E* through which air or gas under pressure is forced; moreover, water may be introduced. The thermostatic valve, *F*,

comprises a disk that is fused by the vulcanizing heat, liberating the compressed air or vaporized water which expands the casing forcibly within the mold.

A subsequent patent covers the means of assembling and holding the three sections in annular form, which consists of a ring within them for holding them in proper relative positions, the abutting approximately cylindrical surfaces of the ring and segments being varied to form dove-tails extending across the plane of the core and a top screw being driven through the ring into each of the three segments.

McLeod Internal Pressure Tire Vulcanizing Bag

Under certain conditions the use of steam, air or water as internal pressure producing agents in curing tire casings has resulted in per-

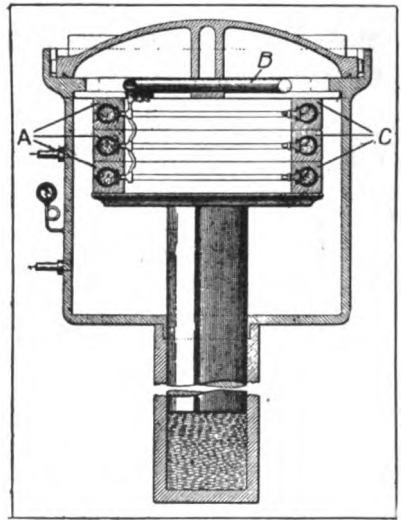

McLeod Vulcanizing Bag

meation of the structure. This is obviated in the present invention by maintaining the water that fills the casings under hydraulic pressure, while the expansion due to the heat of vulcanization is controlled in a special expansion chamber.

The illustration shows an ordinary press vulcanizer in which are stacked the molds *A* containing the tires to be cured. Previous to bolting down the head, water under pressure is conducted to the individual molds and the compression chamber *B*, and the air in the tires is forced out through valves *C*. The compression chamber being closed,

the air cannot escape and is hydraulically compressed in the chamber serving as a cushion that compensates for the expansion of the water in the tires.

In a previous invention granted to the same inventor water is compressed in a cylinder provided with a piston and coiled adjustable springs that control the expansion of the water during vulcanization.

Gummer Expansible Mandrel

In vulcanizing leather or other treads to pneumatic tires it was formerly the custom to use solid and flexible wire mandrels and to bind the tire with cloth strips to put outside pressure on the tire. With the Gummer expansible mandrel the desired internal pressure is exerted uniformly by turning a thumb-screw, the wrappings are dispensed with, and the work can be inspected at any time.

Inside the mandrel are located expanders at required intervals and operated by a screw. The expander arms that engage the edges of the mandrel are attached to a loose nut, mounted on a screw. One end of this screw presses on the center of the mandrel ring or rings. The other end of the screw is extended outside the mandrel so that it can be turned with a key after the vulcanizing shield has been put on. The expander arms are so arranged that when the screw is turned, pressure is put on the edges of the mandrel ring or rings, the foot of the expander itself pressing on the center of the mandrel.

RINGS, FLANGES, PADS AND MACHINES FOR CORES

Rowley Cloth Wrapping Compression Rings

In preparing a built-up tire casing for open cure vulcanization the bead forming rings are applied to the core ring and wet cloth wrappings are then wound spirally around the whole annular assembly. The wrapping compression rings, one on each side of the core, are next put in place, forced together in an hydraulic press and held by transverse pins. The lips of these rings strain the wrappings against the tread and side walls of the carcass, while the bead rings are pressed into and shape the clincher grooves, the bead of the tire being forced into the somewhat angular space between the ring and the core. The whole casing, compacted and shaped from bead to bead, is thus held in place during the cure.

Stultz Tire Building Flanges

In building tire casings to be cured in mold it is very essential that the two sides of the tire be symmetrical in order to insure a uniform stretch when the mold is closed. This is accomplished by

means of the Stultz building flanges which are attached to opposite sides of the ring core and space the sides of the tire from the ring core, each flange having upon its outer face a ledge which supports and positions the wire reinforcing rings and the bead concentric with the axis of the tire. Each flange corresponds in number to and coincides with the sections of the core. When the casing has been built up, and preparatory to the application of the mold the flanges are removed from the core. Since the wire rings are inextensible, they maintain their own diameter and carry the beads in a straight line when the mold closes upon the tire in the press. The straight sides of the tire are pressed to conform to the incurved sides of the core, and a stretch is imparted to the sides of the tire, thereby obviating all wrinkles and insuring a uniform tension throughout the sides of the tire.

Semple Collapsible Core with Non-Metallic Pads

The Semple core consists of three collapsible sections held together by a sectional ring having plane-surfaced lateral flanges extending as far as the edge of the base of the tire to be made, and bolts for securing the ring to the core. Instead of the usual metal bead forming rings or molds between which the built-up tire is placed for open-cure vulcanization, flexible annular pads of frictioned fabric are used of a cross sectional shape adapting them to fit against the tire beads and to engage the core ring flanges in such a manner as to give the whole assemblage a regular outer contour free of re-entrant angles. Upon wrapping with cloth strips in the usual manner, the entire exterior surface of the tire is under the same constricting pressure, none of it is in contact with metal and the whole will cure alike without irregularities of thickness, pinches and blisters, or any line or seam such as bead rings often make between the open cured and molded sections of a casing.

Darrow Non-Metallic Annular Tire Core Pads

The object of this device is to provide mechanical means whereby the fabric of the tire is stitched or expanded in the vulcanizing mold. The ring core *A* is provided with two lateral annular rings or non-metallic pads *B* and the fabric plies *C* are laid on the core, the beads applied and the casing finished in the usual manner. Before curing, the pads are removed and the casing is placed in the mold, annular parts of which engage the head flanges, forcing them in contact with the core proper. This movement stretches the casing equally from each side wall to the center of the tread, in which condition the casing is vulcanized.

Grosvenor Lifting Tongs for Tire Cores

These tongs comprise a suspending rod on which a yoke slides, two dependent arms with turnably mounted grips grooved to receive the inner projecting portion of a tire core at opposite points, a trans-

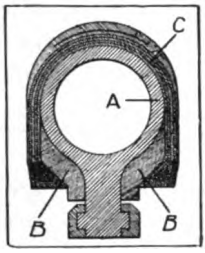

Darrow Core Pads

verse bar attached to the suspending rod below the yoke and forked at each end to engage the dependent arms and having rollers in the forks bearing against the inner sides of the arms and adapted to expand the arms when the suspending rod is raised.

Gillette Sectional Tire Core Remover

The removal of sectional cores from tire casings after curing is facilitated by this ingenious device that is adjustable to any size core.

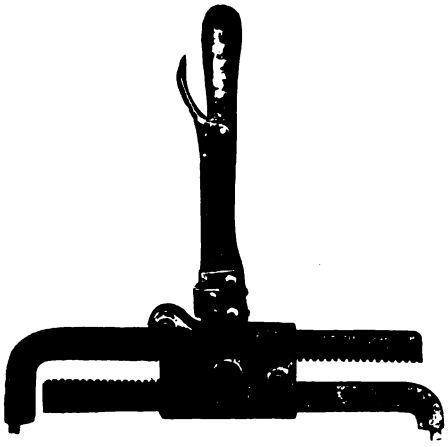

Gillette Core Puller

Small holes in which the prongs of the puller are inserted may be drilled in the core sections, or the raised parts of the core may

be gripped by the prongs that are operated by the hand-lever attachment. By means of this lever the sections are easily removed without kinking the tire beads.

Stevens Machine for Applying Bead-Clamping Rings

Bead-clamping rings used when curing tires on expansible cores or air bags, are quickly and accurately drawn into place by this machine. The figure is a vertical section through the center of the

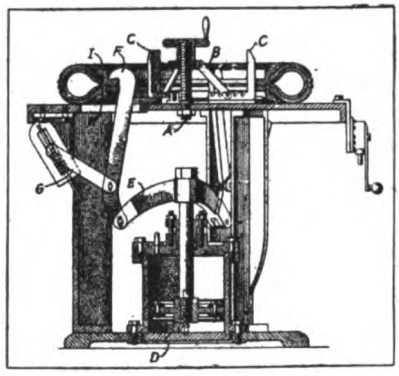

Stevens Bead-Ring Clamper

apparatus that consists of a circular table mounted on three legs at a convenient height for handling tires. Mounted in the center of the table is a vertical screw, *A*, provided with a threaded nut and a collar, to which three links, *B*, are attached and adjustably connected to slides that terminate in vertical guides, *C*. A piston reciprocating in the cylinder *D*, supports on its upper end a head with three arms *E*, to which are pivoted arms terminating in hooks *F*. Pivotally connected to the arms are links *G* terminating in spring slides that operate with the piston to control the clamping hooks.

Lower bead ring *H* is placed on the table by the operator and centered by guides *E*, when a tire containing an air bag is placed upon it and the upper bead ring *I* superposed. Air is admitted to the bag, meanwhile fluid pressure is admitted to the clyinder *D* whereby the hooks *C* engage the tongue of the upper bead ring, thus drawing both rings together. When sufficient pressure has been forced into the air bag to properly seat the bag and the lower edges of the tire in the rings, the pressure is relieved and the piston forces the rings downward to the final position where they are secured by bolts through the tongues of the clamping rings. The piston is then forced in the

opposite direction and the tire with the clamping rings is ready to be placed in the mold.

Core Cleaning Machines

It is common practice to coat the sides of tire cores with rubber cement, which is allowed to dry before the tire casing is built up. After vulcanization the tire is stripped from the core and very often patches of dry rubber cement adhere to the core so that it must be scraped off and a new coating of solution applied before the core can be used again. It was formerly customary to scrape this dry cement from the core by hand, and then apply new cement by the same expensive method, but this practice has been superseded by several machines which revolve the assembled core rapidly while scraping and brushing tools are used, after which a coating of thin rubber cement is applied to the side faces of the core where the beads are to be placed. Some of the machines are equipped with rotary wire brushes eliminating all hand work.

Killian Tire Core Cleaner

Killian's machine is for removing the dry cement from the core and applying fresh solution. The apparatus comprises a heavy wooden frame *A*, in which are supported two concave rollers *B*. At the top of the frame is a third concave roller *C* mounted in a slot *D* so that the roller may be raised or lowered to accommodate cores of different sizes. The core *E* is run from the chute *F* onto the rollers *B*, and is

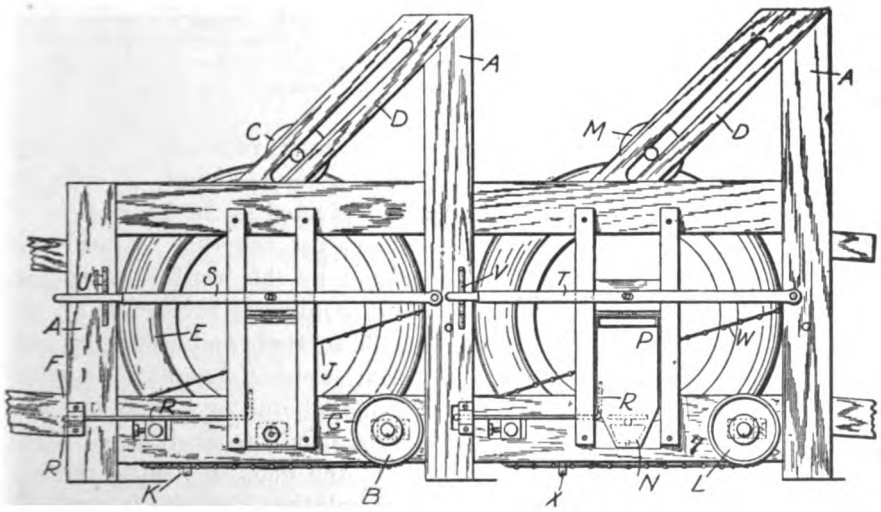

Killian Tire Core Cleaner

held from lateral movement by the roller *C*. Power is then applied to the driving pulley *G*, which revolves the core. The detailed drawings comprise an end view of the machine, and sectional views of the scraping and coating apparatus. As the core revolves, stiff steel brushes *H* come in contact with the sides of the core and quickly remove the dry cement. These brushes are pressed against the core by means of weighted levers *I*. After the removal of the dry cement, which usually requires only one or two revolutions of the core, the sprocket chains *J* are set in motion. A cross bar *K* attached to the chains raises the core from the convex rollers B and carries it over to the opposite end of the machine where it rests upon another pair of convex rollers *L*.

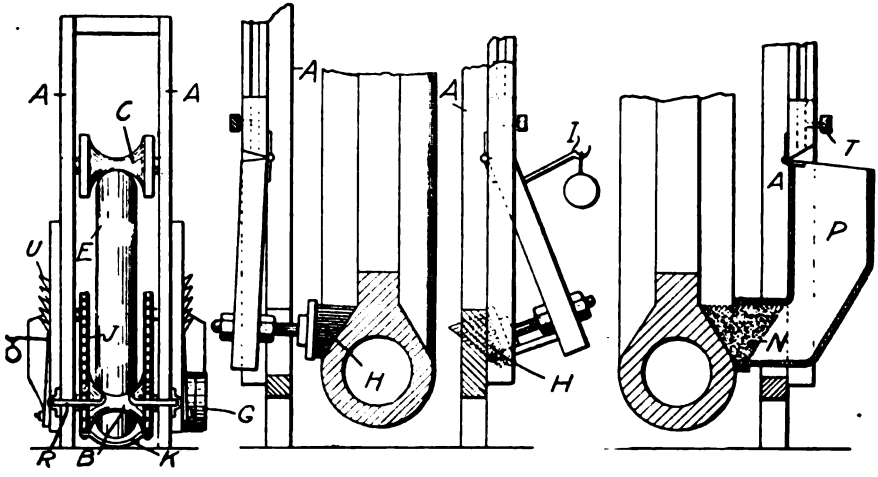

DETAILS OF KILLIAN CORE CLEANER

and is held in a vertical position by the convex roller *M*. The core is again set in motion and as it revolves a conical brush *N* rolls in contact with each side. These brushes are pivoted in the lower ends of solution tanks *P* and as they revolve against the core, a sufficient quantity of rubber cement, carried around by the brushes, is spread in a thin layer on each side of the core. Only one revolution of the core is required. To apply the cement, the scrapers and coating rollers are swung outward by means of the bent levers *R* operated by cross bars *K* and *X*, when the core is being moved into or out of the machine and they may be held at any desired height to fit different sized cores, by means of the levers *S* and *T*, the ends of which rest in racks *U* and *V*. After being coated with solution, the core is removed from the machine by sprocket chains *W* carrying a cross bar *X*. As

soon as one core has been cleaned it is rolled into the coating end of the machine and another core immediately takes its place between the scraping brushes.

Gammeter Pneumatic Tire Core Revolving Machine

The frame comprises an upright *A* and base *B*, provided with bearings *C* and *D*, in which revolve two core-supporting rollers *E* and *F* having V-shaped peripheries — the former being belt driven, and the latter an idler. Between these rollers is mounted a Y-shaped core rest *G*, that is raised and lowered by the treadle *H*. The upper guide roller *I*, with a V-shaped periphery supports the core in an upright

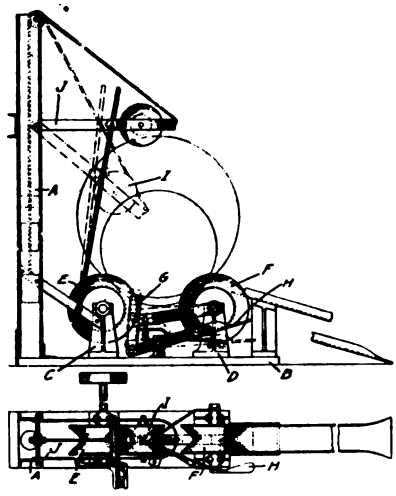

Gammeter Core Cleaner

position, and is journaled on the swinging arm *J*, which can be raised and lowered to accommodate cores of various diameters.

The machine is operated by first raising the core rest, which is done by the foot on the treadle; then the core is rolled up the incline by the operator and placed on the idler roller and core rest. The latter is then lowered until the core rests on the driving roller, when the upper guide roller is lowered into operative position to maintain the core upright. The operator then starts the machine and performs the various cleaning operations with the use of scraping and brushing tools, while the core is being rapidly revolved. A coating of thin rubber cement is finally applied to the side faces of the core which completes the operation.

Wheeler Tire Core Cleaning Machine

The machine is mounted on a base *A* provided with housings *B* that support the main shaft *C*, upon which are fulcrumed the swinging arms *D, D*. The two belt-driven, rotary wire brushes *E, E* are journaled in the ends of the swinging arms, and are held in a central position by a bracket, and adjusted by a right and left-hand screw operated by hand-wheel *F*.

The core *G* is mounted on a carriage *H* that is moved backward and forward by a face cam *I;* meanwhile the core is being rotated by

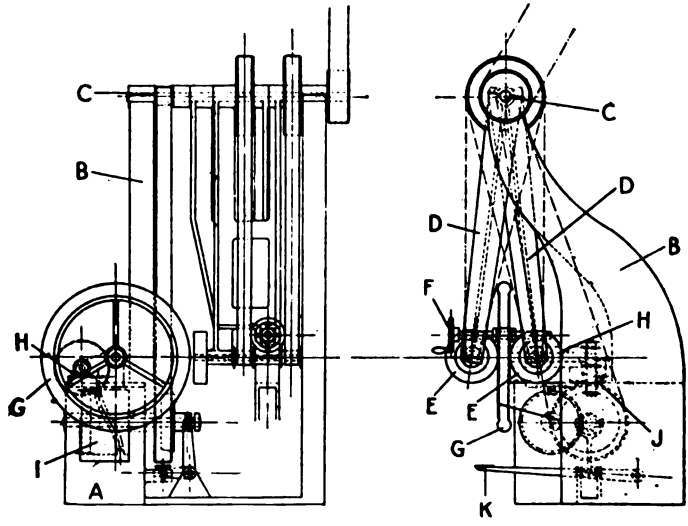

Wheeler Tire Core Cleaning Machine

worm gearing *J*. A friction clutch operated by treadle *K* controls the movement of the core and carriage, while the brushes run continuously. Instead of mounting the core on the spider, two concave driving pulleys below, with one concave idler pulley above, may be utilized to drive the core, thereby avoiding the time necessary in chucking the core on the spider. The machine shown in the drawings is operated by belt-power. This, however, is optional, as motor drive may be installed with an additional cost that in most cases is deemed negligible.

CHAPTER XVII

TIRE BUILDING STANDS

IN building tires by hand, which is still done in many of the smaller factories, one of the most essential appliances is a support for the tire while it is being built up. Tire building cores of whatever design are supported by a building stand which consists of a standard bolted to the floor and a revolving spider upon which

WOMEN FINISHING TIRES

the core is locked. Axles or universal joints permit the tire under construction to be turned in any way at will, while a spring ratchet or other device locks it rigidly in any desired position.

EARLY TYPES

Following are five representative early types of building stands or racks intended for building up automobile tires by hand:

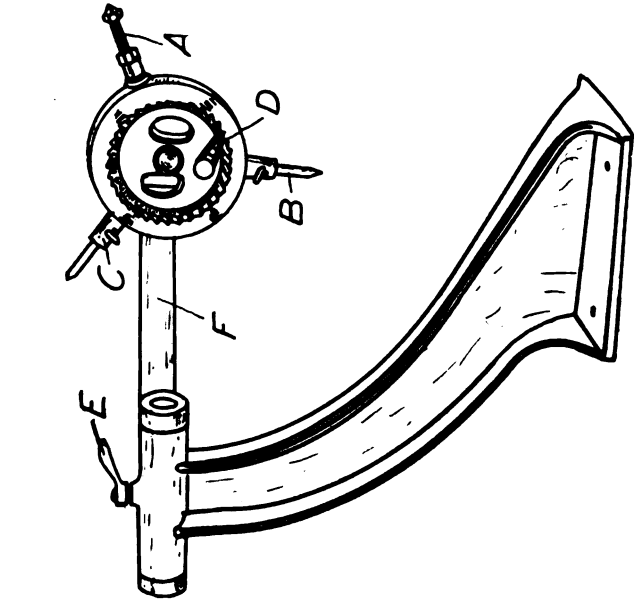

ADAMSON STAND

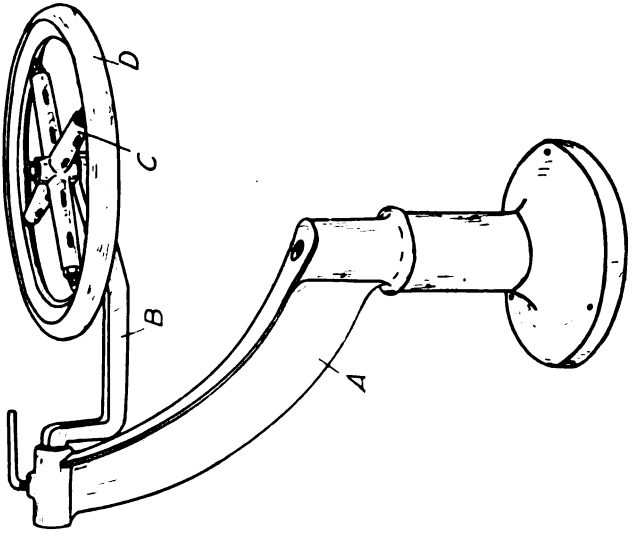

THROPP STAND AND CORE

Thropp Stand

The Thropp stand has an iron pedestal *A* and is provided with a projecting arm *B*. This arm is adjustable so that the spider *C* may be turned in either a horizontal or vertical position. Each of the four arms of the spider has an adjusting screw so that it can be made to fit the core or making-up form *D* for any size of tire.

Adamson Stand

The Adamson tire-building stand is similar to the Thropp except in the construction of the spider. One of the arms *A* is threaded to be set for any size of tire while the other two, are provided with thumb screws for instant adjustment. By means of a ratchet device *D* on the inside of the spider, the tire can be revolved only in one direction. The spider is mounted on ball bearings and is very light and easy in operation. By means of the screw lever *E*, the arm *F* may be set to turn the spider into any position.

Williams Stand

The Williams tire stand is operated partly by a foot lever *A*. Pressing this lever releases a ratchet flange *B*, at the end of the core spider shaft, so that the tire may be swung instantly to any position. Releasing the pedal instantly locks the core. The adjustable tool table *C* is attached to the frame and may be swung to either side of the stand *D*. It saves time by placing the necessary tools within instant reach.

Bridge Jack

The Bridge jack is the same in principle but somewhat different in form from those described above. The spider *A* is in the form of a flat plate with three blocks *B* radially adjustable by means of hand screws on the reverse side of the plate. The spider may be turned either vertically or horizontally and locked in any position.

Iddon Stand

Iddon's tire building stand is an English type of double-ended jack. It consists of a frame supporting a table with a tire jack at each end. Each jack comprises an adjustable spider to support the core, the spider being mounted on a universal joint so that the core can be turned into either a vertical or horizontal position. The rollers, which carry the rubbered fabric, and the guide wheels are mounted on supports in front of the jacks and convenient to the operator.

Modern Stands

Building stands of the present day are of three types. There are stands for building tires by hand, finishing stands for the final hand

BRIDGE JACK

AKRON-WILLIAMS STAND

WILLIAMS STAND

operations of minor character on machine-built tires, and stands used by repair men for rebuilding and retreading tires.

Akron-Williams Tire Building Stand

Of heavy rigid construction, this stand is provided with a three-point spider having notches on one side of its rim. A reversible ratchet engages these notches, permitting the core to be spun, or to be locked against rotating in either direction while stretching on the plies. The

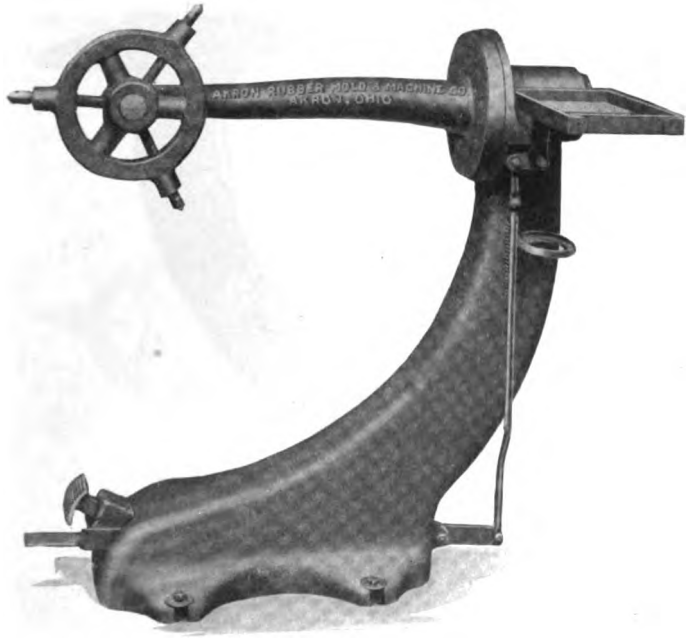

Akron No. 3-B Tire Building Stand

spider arm or bracket turns in a babbitted bearing and carries a ratchet which permits the core to be twisted around and worked on from either side, or to stand upright. A lever with spring attached locks the shaft where wanted. A cast-iron tool box is part of each stand.

Akron Tire Building Stands

The stand swivels on the main bearing, allowing the operator to work on the tire at any angle. The tire can be locked in the desired position by means of a ratchet operated by a foot pedal situated at the

base within convenient reach. The spider has roller bearings and a reversible ratchet. The same stand is also made with a hand operated ratchet.

Another similar stand does away with the slow method of tightening or loosening each screw of the spider separately when mounting

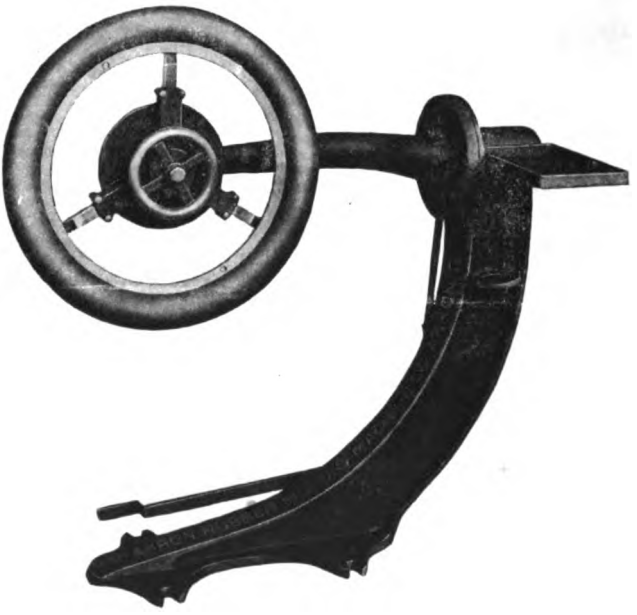

AKRON NO. 6 TIRE BUILDING STAND

or removing the core. One operation of the wheel shown, quickly adjusts all screws at the same time.

EAU CLAIRE STAND

The Eau Claire stand has eight adjustments controlled by a foot pedal and an automatic lock for setting the tire at different angles. It is also equipped with a ratchet attachment for pulling on plies of fabric, and there is a tray to hold two cement cans and the tire builder's tools. The ease with which this stand is operated recommends its use for women workers.

P. I. W. TIRE-BUILDING STANDS

Both of these stands are built alike, with the exception that the ratchet holding the arm in position is operated by a foot-lever on one machine while the other is hand-controlled.

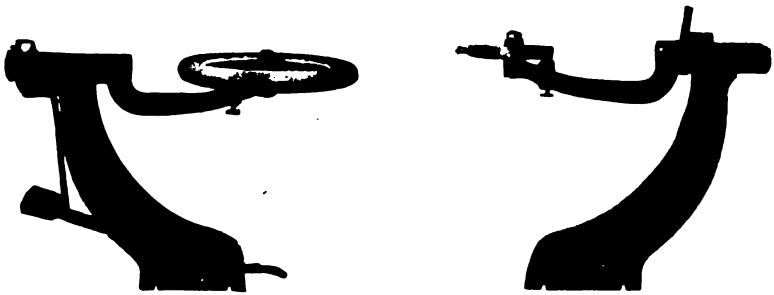

FOOT AND HAND OPERATED P. I. W. TIRE-BUILDING STANDS

The spider revolves on a turned shaft, riveted into the arm, and is provided with three adjusting screws capable of accommodating cores for any size of tire from 28 to 44 inches in diameter. The ratchet

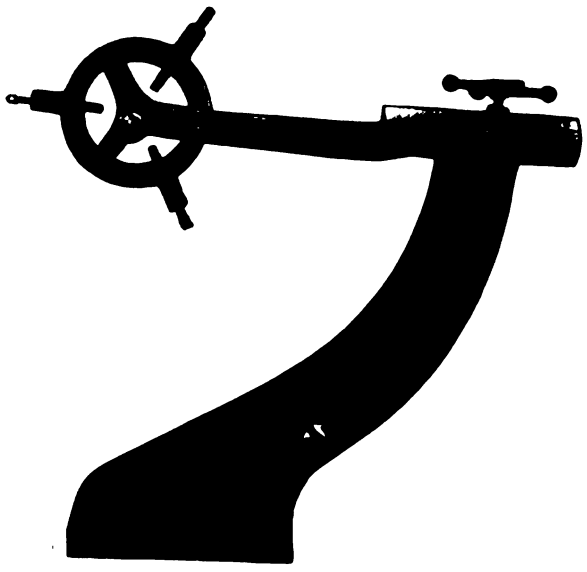

MILLER TIRE-BUILDING STAND

catch on the spider is reversible, enabling the operator to work on either side, or it may be thrown out, permitting the spider and core to turn freely.

The lever system of the foot-operated stand is made of bar steel, counterbalanced with a weight, thus doing away with springs and the in-

convenience they cause. The lever can be changed from the right to left by reversing the connecting rod and attaching the foot lever to the lug on the opposite side of the stand, thus permitting the operator to work on either the right or left side of the stand.

Miller Tire Building Stand

With this stand the tire can be revolved in either direction and placed in a horizontal or vertical position for convenience of the operator. The main shaft is locked in the desired position by means of a hand screw.

Eau Claire Portable Tire Stand

This unique combination of a tire-building stand and a lift truck by which the former is made portable is provided with a horizontal bar on which the tires are placed prior to vulcanization. When it is desired to transport the stand to the vulcanizing room the truck is slipped under the stand which is raised on the truck platform by means

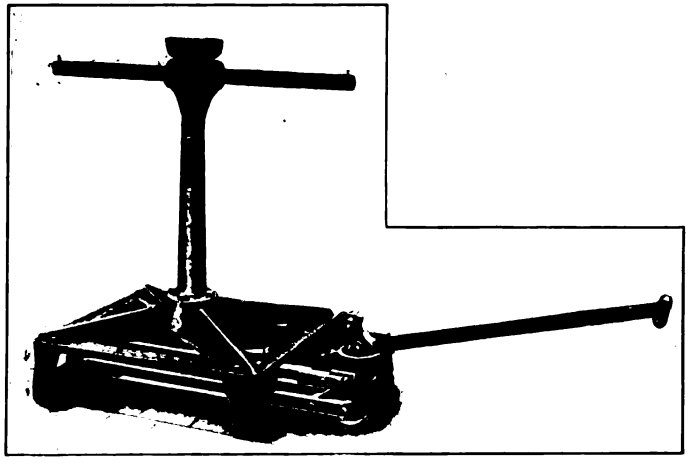

Eau Claire Portable Tire Stand

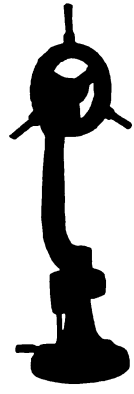

P. I. W. Finishing Stand

of a fulcrum. The truck platform is lowered by compressed air and the tire-building stand deposited on the floor when the truck is readily removed from under the stand.

Champion Tire Building Stands

Spinning the tire with one hand and using the various tools with the other is eliminated in this machine as the operator has both hands

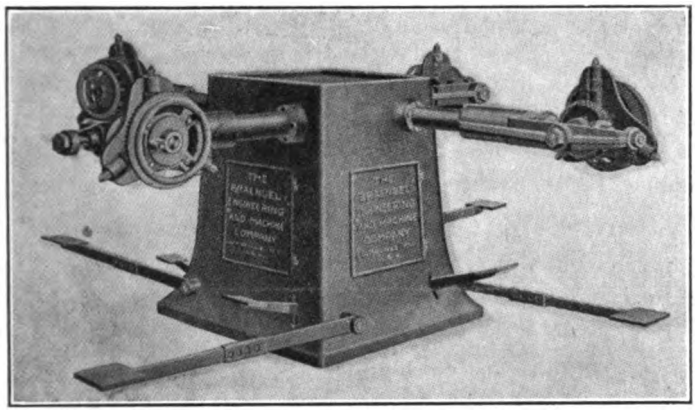

CHAMPION FOUR-MAN BUILDING STAND

free and can revolve the tire either forward or reverse, at any speed and at any angle, by operating a foot-lever.

These stands are made in three different types. The one shown in the illustration is the base with four projecting arms, enabling four men to work at the stand. The second is the base with two arms parallel with each other, enabling two men to work at the same stand; and the third is the single stand for one man.

The four-man base can be obtained with one arm and other arms can always be added as the manufacturer requires them. There are ball bearings on both the main drive shafts, thereby making the machines noiseless and easy to run.

P. I. W. TIRE FINISHING STAND

The use of tire finishing stands is becoming more general with the wider adoption of tire building machines. The finishing stand is used in this connection because of the small amount of floor space required and the possibilities of using a large number of these stands with one tire building machine. The P. I. W. finishing stand shown opposite is typical of several others of similar design and construction.

The upright position of the arm permits only a vertical motion of the tire, but the arm can be easily rotated to any vertical plane. The ratchet is operated by a foot lever which works a pin into holes in the base of the arm, holding the arm rigidly in any one position or enabling it to be moved easily. The arm and ratchet of the finishing stand are the same as the arm and spider of the P. I. W. building stands, having a tire capacity of 28 to 44 inches in diameter and up to 6 inches cross section.

Akron Tire Finishing Stand

This stand is substantially like the one above. Any size core can be used up to 42-inch. By use of a foot pedal the arm can be revolved to bring the tire into any position desired by the operator. In some factories this stand is used for building hand made tires as well as for finishing machine-made tires.

Akron-Williams Tire Rebuilding Stands

Repairmen use this stand for rebuilding and retreading tires and for building up inside tire protectors, reliners and other accessories. The casing is either mounted on a regular rim, which is then

A.-W. Tire Rebuilding Stand

Akron Finishing Stand

placed on the spider, or on a retreading rim with retreading coil inside the casing; or a special reliner building form can be fitted on the spider.

The stand has a three-point spider on an arm or bracket turning in a babbitted bearing, and carrying a reversible ratchet at its hub so that the core can revolve freely or lock against rotating in either

direction. Another ratchet is keyed to the end of the arm or bracket to hold the core in any desired angle, horizontally or perpendicularly. Pressing on the pedal permits the core to be swung to the desired position. Releasing it instantly locks the core in position. An adjustable tool table may be swung to either side of the stand. A tread rolling attachment is provided with five rollers of different size, the levers being so arranged that the rollers in use will swing down below the tread on each side. The pressure of the roller against the tire is controlled by hand.

A simpler type of rebuilding stand occupies very small floor space and is light in weight without sacrificing strength. A spring ratchet permits the tire to be revolved either way at will or locked rigidly in one position.

Akron Treading Stand

Designed for use in treading tires, this stand consists of a heavy forked base with a tight and loose pulley on the drive shaft and a spindle extending through and bearings on both sides of the stand so that either side, or both sides at once, may be used as desired. This stand can also be used for building straight-side beads eliminating pulleys.

CHAPTER XVIII

TIRE MOLDS

TIRES not wrapped with moistened cloth strips and vulcanized in open steam are cured in molds of iron or steel consisting of two or more parts accurately machined to the contour of the tire to be vulcanized and usually having the tire size, the trade or firm name of the maker, and sometimes a non-skid design engraved on the inner surfaces.

The round "hose pipe" tires of former years were vulcanized in nest molds consisting of several steam-chambered boxes bolted together, but for the most part the molds of to-day are intended for use in hydraulic press vulcanizers. Some of these molds are intended for use with the building core inside the tire casing, whether the core be of fixed diameter or of the internal pressure type so constructed that water and steam under pressure, either filling the entire casing or a space between the core and the casing, expand the casing to fit the mold and thereby stretch the fabric during vulcanization.

There are bead molds and fabric pads for use in connection with cloth wrappings in open cure vulcanization, tread molds for giving a harder cure than the side walls receive, or for curing a tread applied after the carcass has been vulcanized. There are non-skid tread molds for producing the tread design and curing the tire in a single operation, special molds for applying studded tread bands of rubber or leather to tire carcasses, and pulley-like molds for making semi-cured endless non-skid tread bands for new and retreaded tires. There are wire jackets to be placed between mold and casing so that the merits of open and mold cure are combined, hydraulic pressure and electrical vulcanization molds and numerous attachments, also molds for forming leather covers for tires.

INTERNAL PRESSURE MOLDS

Johnstone Internal Pressure Mold

The casing, after building up on a collapsible core, is placed over a ring of less diameter than the core, and is then inserted in the mold. thus leaving an annular cavity through which steam, hot water, or hot air can be circulated under pressure, the mold being also heated externally in the ordinary manner. The edges of the cover are clamped between the mold and the ring to form a steam-tight joint. A piece

of sized cloth may be placed between the rubber of the tire and the mold to facilitate the escape of gases. The ring and mold are made to register by bosses on their inner periphery, and the fluid-circulating pipes pass through these bosses and guide them together. The ring is fitted with springs for pushing it upwards when the mold is opened, thus facilitating the removal of the tire. The beading, which determines the inner diameter of the tire, may be formed on the ring instead of in the mold. Grooves may be made in the ring to adapt them to tires made with wires. In molding small tire casings the casing is centered on the ring by means of another expanding ring made in four segments, each segment being guided by rods fixed to a block which slides between guides and is moved in or out by means of a stud and a slot in a rotatable plate, or by other means for opening and closing the mold. After the mold has been closed, the centering ring is contracted away from the cover.

McLeod Internal Pressure Mold

The cross section shows a vulcanizing mold for stretching the tire fabric and holding it stretched while the tire is being vulcanized. The device comprises the hollow outer-sections *A*, connected by means of

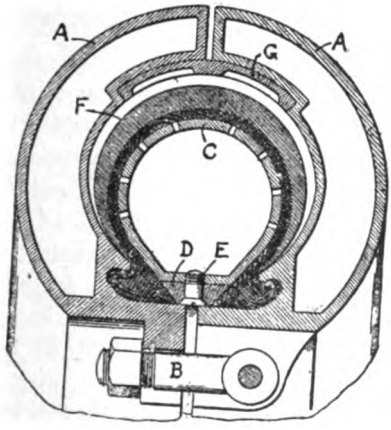

McLeod Internal Pressure Mold

the bolts *B*. The hollow core *C* is made in sections and is secured to the ring *D* by the screws *E*. The core is perforated so that steam admitted to the interior will act upon the inner surface of the tire casing *F*. It will be seen that the space between the core and the outer section *A* is greater than the cross section of the tire before

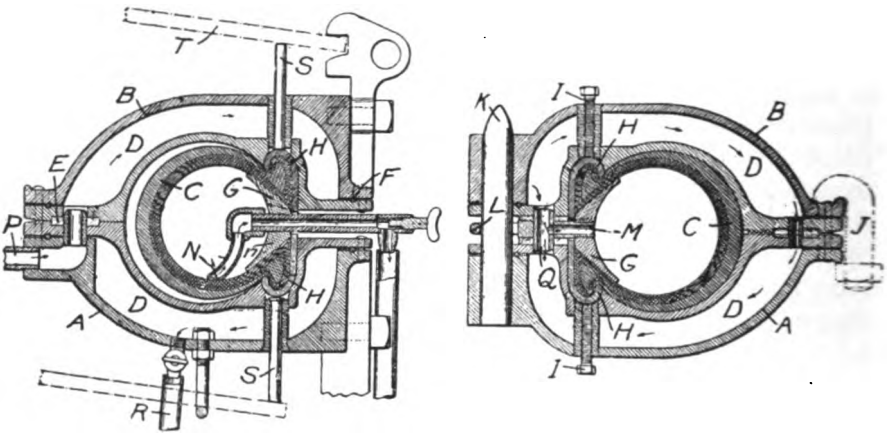

DEES-MCLEOD INTERNAL PRESSURE MOLD

vulcanization. This allows sufficient clearance for expansion of the casing and the stretching of the fabric when the bolts *B* are tightened. Means are provided for introducing different forms of tread molds between the section *A* and the tire, one of these molds being shown at *G*, with the apparatus ready for the introduction of steam.

DEES-MCLEOD INTERNAL PRESSURE MOLD

This mold consists of two shells *A* and *B*, between which the molded tire *C* is clamped, leaving a space slightly larger than the finished tire. Each shell is formed of two parts riveted together, leaving spaces *D* for heating the vulcanizer with steam. The joint between the shells is kept steam tight by packing *E* and *F*. The tire is held in position by means of an annular ring *G* and two rings *H* of the same shape as the tire rim. These rings are held by set screws *I*, which may be adjusted from the outside. The two sections *A* and *B* are held together by bolts, by clamps *J* and dowels *K*. Correct alinement between the parts of the vulcanizer is obtained by means of rings *L* through which the dowels pass. Steam is admitted to the interior of the tire through the passage *M* and water from condensation is removed through the tube *N* resting against the pipe *P* and passes around the upper section, through pipe *Q* and to the lower section, from which water from condensation is carried away through the pipe *R*. In order to assist in removing the tire from the vulcanizers, rods *S* are provided. These pass through the shells *A* and *B* and they rest against the rings *H*. By means of the levers *T* the two halves of the vulcanizer may be forced apart.

Dees Internal Pressure Mold

The tire casing is built up on an annular core and placed in the two-part mold, sufficient space remaining between the core and mold walls to permit adequate expansion of the tire under pressure. In order to stretch the fabric of the carcass and so hold it during vulcanization, water is introduced between the core and the casing through an angular duct leading from the inner circle of the core to the lowermost point on the bottom face of the core. A transverse groove leads from the lower end of the duct to an annular groove formed in the periphery of the core, so that the stretching of the fabric begins at the center of the periphery of the core and is equally distributed to the opposite sides of the tire as the fabric is gradually peeled from the sides of the core with increasing fluid pressure. During vulcanization most of the water is turned into steam, the remainder in the lower portion of the tire being drained off through the duct for best results.

Swinehart Internal Pressure Mold

When a tire is being cured by hydraulic pressure applied to the interior, it is sometimes injured by excess pressure. With the Swinehart mold the excess pressure escapes automatically. The casing *B* is placed in the two-part mold *A* and filled with water through the pipe *E*. The mold is then subjected to pressure in an hydraulic vulcanizer press and live steam admitted. This expands the water in the

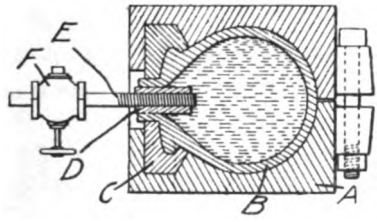

Swinehart Internal Pressure Mold

tire and presses the casing against the inner surface of the mold. In case there is excess pressure within the tire the relief valve *F* opens automatically and allows it to escape.

Batcheller Internal Pressure Mold

It is a two-part annular mold with interchangeable tread-forming rings and inside and outside rings for alining the mold parts. Pressure is applied to the interior of the tire by a water inflated bag.

Pfeiffer Self-Contained Tire Vulcanizing Mold

This mold of unusual design is adapted to be used for building up the carcass of pneumatic tires and vulcanizing them without removal from the mold until the time has elapsed to effect the cure.

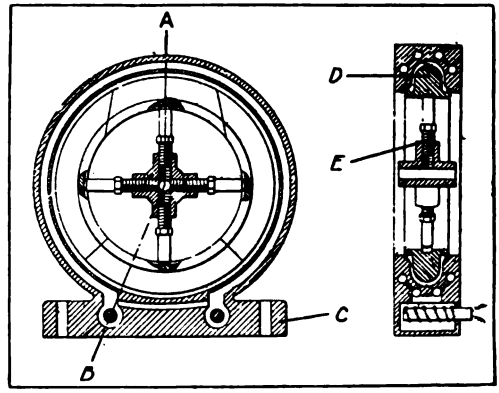

Pfeiffer Mold

In the illustration, which shows a vertical section and an approximate section taken on the line *A B, C* is the mold that is bolted to any convenient support and provided with heating chambers, *D* is the sectional core and *E* the core expanding device comprising four adjusting screws.

In practical operation the various plies of frictioned fabric constituting the carcass are successively placed within the mold and shaped by hand and the beads applied. When this operation is finished the three straight sections of the core are mounted in place and finally the top or wedge-shaped section is introduced. The four screws of the expander being retracted, it is then located within the core, the heads of the screws alining with the channel grooves, and when the screws are expanded the core forces the casing against the walls of the mold. Any suitable means may be employed in curing, but in this instance electric heaters are introduced into chambers provided in the base of the mold for that purpose.

Midgley Vulcanizing Jacket

By means of this device heavy pressure can be applied to a tire casing during vulcanization without preventing the access of steam to the surface over which the pressure is applied, thus combining certain advantages of both the open cure and vulcanization in mold.

The tire is clamped rigidly upon the core by means of bead rings together with cloth wrappings, which are tightly stretched over the tire by means of special rings. A jacket formed of coils of wire is placed over the tread portion of the tire to which pressure is to be applied by means of the clamping members of the mold. When the apparatus is placed in the vulcanizer, the steam passes freely through the wire jacket, the cloth wrappings and into contact with the tire.

Williams Open Cure Mold

The Williams' tire mold is designed to insure application of an equal pressure to the tread and sides of the tire without the liability of injuring the tread by direct contact with the hot metal of the mold, or by the enclosure of gases in the mold. The two main halves *A* are pierced by numerous holes *B* to permit the circulation of steam and the escape of gases and water of condensation from the inner cavity. The inner surfaces of the mold sections may be corrugated to form any desired tread design. In direct contact with these

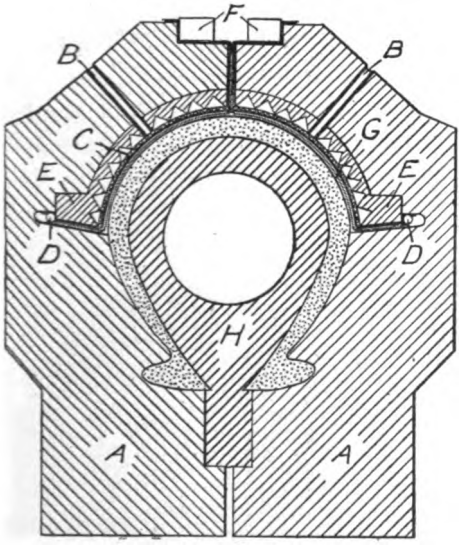

Williams Open-Cure Mold

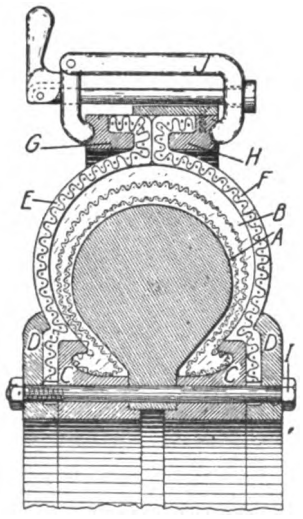

Robbins Open-Cure Mold

corrugations, is inserted a layer of heavy brass wire gauze *C*. This gauze is tightly stretched and is held in position by heavy wire rings *D* soldered to the gauze, and also by steel-locking rings *E* and *F*. In close contact with this gauze and held in position by the same locking

devices is a layer of duck or canvas *G*. The tire bead and side walls are formed in the cavity between the iron side molds *A* and the core *H*, while the tread is formed in the cavity between the fabric *G* and the core *H*. If desired, an air bag may be substituted for the core. The wire gauze in this mold will last indefinitely, while the canvas lining must be renewed after about 100 curings.

Robbins Open Cure Tire Mold

The principal object of this invention is to avoid the wrapping process customary in open cure tire vulcanizing. In place of the usual strips of cotton cloth that are wound around the mold and tire, a fabric diaphragm is clamped securely on both sides of the tire, forming a flexible support, covering the casing and tread.

In the cross-section illustrated, *A* is the tire core, *B* the tire casing and *C*, *C* the two bead rings. *D*, *D* are the two rings that hold in place the lower edges of the flexible diaphragms *E* and *F*, composed of canvas of rubberized cloth, while the upper edges are held by two rings, *G* and *H*. Bolts *I* clamp the inner parts together, and clamps *J* hold the outer sections in place. The mold is then placed in the heater and the tire cured by the open cure process.

Hopkinson-Midgley Ring Molds

With this apparatus for open cure vulcanizing the tread portion of the tire is covered only with fabric, which allows vulcanization to be effected by a single exposure to live steam, and at the same time

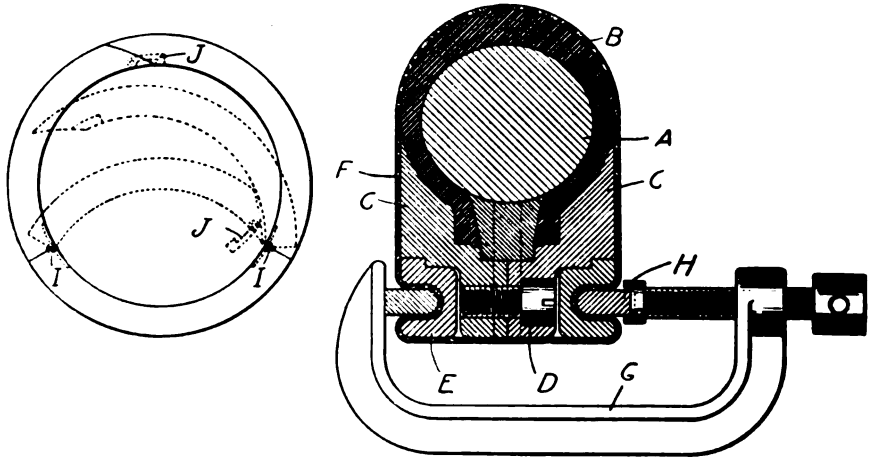

Hopkinson-Midgley Ring Mold

eliminates the contact of the tread with the metal during vulcanization. The core *A* is placed in the tire *B* in the usual manner and the two metal ring molds *C* are clamped together by means of screws *D*, enclosing the sides of the tire. These molds are made to conform to the shape of the beads and sides of the tire as shown. Outside of these molds are placed two annular rings *E*, after which the tire with the molds and rings *E* in place, is wrapped with fabric *F*. The rings *H* are then placed on either side of the rings *E*, and forced into the grooves in rings *E*, by means of clamps *G*, so as to stretch the fabric *F* tightly around the tire. The core *A* used with this mold is made in three sections connected by hinges *I* and is provided with a latch *J* to secure the sections in true circular form when the core is placed in the tire.

Satterthwaite Fabric Pad Molds

These molds are designed for producing an open cure over the entire outer surface of the tire. This result is accomplished by the use of pads made from frictioned fabric.

The drawing *X* is a cross section of a clincher tire with the pad applied and the whole device wrapped with fabric for vulcanization. The drawing *Y* shows pads of another form for vulcanizing straight side tires. Referring to the first drawing, *A* is an annular core of cast iron. *B* is the tire shoe and *C C* are the two pads covering both sides of the tire but leaving the tread exposed. These pads are reinforced with annular rings of steel, shown at *D D*. The method of employing the pads is obvious from the foregoing. The tire carcass is first built

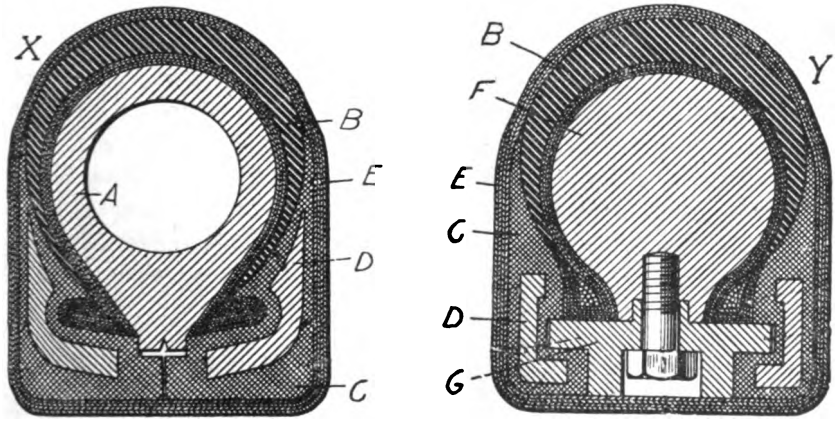

Satterthwaite Fabric Pad Molds

up on the core and rubber is applied and shaped to form the tread. The pads *C* are then set in place and pressed into contact with the beads and sides of the tire. Finally, wet strips of fabric *E* are wound tightly around the tire and pad and the tire is then vulcanized in open steam under pressure. During the vulcanization the tape shrinks slightly and the whole exterior of the tire is thus cured under practically uniform pressure. This gives substantially the conditions of the open cure process.

The principle of the device shown in the second drawing is the same as that described above. The only difference is that a collapsible core *F* and reinforcing ring *G* are employed.

Tew Shield for Vulcanizing Molds

To prevent the formation of ridges on the inner surfaces of cord tire casings during vulcanization, a stiff flexible shield is placed between the pressure bag and the casing.

Byrne Mold

In this type of mold the inner part is closed at the last part of the operation so that the beads can be inspected before the final closing.

Robbins Hydraulic Pressure Mold

To avoid the wrinkles and unequal strains in the fabric carcass which sometimes result from curing in ordinary iron molds, all parts of which are entirely rigid, the Robbins mold employs a flexible formative diaphragm of impervious rubberized cloth, hard rubber or paper filler which divides the forming chamber of the mold into a tire chamber and an hydraulic chamber.

The mold consists of two similar annular metal copes, provided with lugs by which they can be bolted together; two similar interior metal cheeks having bead grooves and a metal core. The flexible formative diaphragm, composed of two halves, is clamped in position by flanges which form water-tight seats between the copes, the cheeks and the cheek rings. The diaphragm divides the forming chamber into an interior tire chamber and an exterior hydraulic chamber, the latter connected by pipes with a source of hydraulic power, valve controlled.

Price Electric Tire Mold

By the use of a mobile material such as soapstone or sand instead of the tire core and the usual two-part mold or cloth wrapping, Price claims to overcome many of the present difficulties in curing tires. To accurately shape beads it is necessary that they should be clamped, and

to prevent sagging of the tread it should be supported, especially during the initial vulcanizing heat.

Referring to the drawing, the beads *A* are clamped in the plates *B*, to the lower one of which is attached a box-like structure *C* inclosing the tread *D*. The soapstone, sand or mica *E* surrounds and incloses the tread completely as shown. If pressure is to be exerted in the box, cover *F* is bolted down and the shoe thus arranged is ready for vulcanization, which is accomplished by means of the electric resistance coils *G* and steam or electric coils in plates *B*.

In a modification of the above a hollow metal core is used instead of the soapstone or like substance, in which either steam or electric coils are the vulcanizing agents.

Swinehart Tire Mold

The Swinehart mold consists of annular sections having a flexible wall with a tire molding surface at its outer circumference and pro-

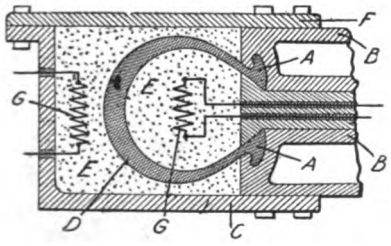

Price Electric Mold

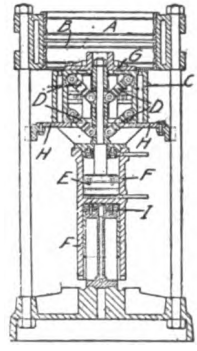

Macbeth-Dunlop Mold and Press

vided with diverging or sloping molding surfaces compressible in a degree toward each other. A core is seated centrally between the molding surfaces and means are provided to equalize the movement of the mold sections at their inner circumference relatively to the core.

TREAD MOLDS

Macbeth-Dunlop Tread Mold and Press

The object of this apparatus is to partially vulcanize the tire cover before the curing operation which gives the tire its final shape. This relates more particularly to those having beaded and unwired edges, which are not rigid in the uncured condition.

The tire cover is molded and vulcanized simultaneously by placing the cover, in the form of a cylindrical ring, in contact with a suitable grooved heated ring, and pressing it by radially moving segments.

In the illustration *A* is the ring, which is heated by making it a part of a steam-heated chamber, and *C* is one of the movable segments. When two or more tires are to be molded and pressed, either ring *A* may be grooved, or additional rings, as *B*, may be employed.

The radial segments are forced outwards by the toggle-joints *D*, joined to the piston *E*, working in the upper part of hydraulic cylinder *F*. The radial segments slide between the fixed parts *G* and *H*, and are attached to the cylinder *F*, which moves over a fixed piston *I*. The two pistons are separated by a diaphragm about two-thirds of the way up in the cylinder. Water under pressure is admitted above the fixed piston *I* to raise the cylinder *F* and press head, and when further upward motion is stopped by plate *H*, water under pressure is admitted under the piston *E* to straighten out the toggle-joints and compress the tire cover.

Gorton Endless Tread Band Molds

Endless non-skid retreading bands are built up by machinery on a pulley-like mold or core on the outer circumferential surface of which is engraved the desired tread design. The mold is then removed to a tread mold press similar to the Macbeth-Dunlop press and semi-cured.

Nall Non-Skid Tread Band Mold and Press

Non-skid tread bands, for pneumatic tire casings, are molded and semi-cured on the machine here illustrated in side elevation. The base

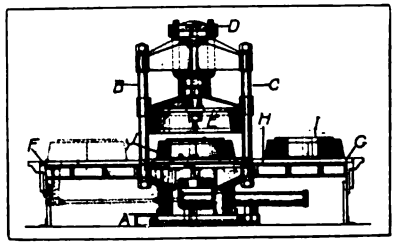

Nall Tread Band Mold and Press

A is provided with four brackets carrying four upright standards, two of which, *B* and *C*, are shown. Mounted on these standards is crosshead *D* that supports a hydraulic cylinder in which is a vertical ram to which is attached reciprocating press head *E*. Frames *F* and *G* ex-

tending from each side of the base are provided with rails on which slide platform *H*, that conveys the molds *I* and *J* through the press. The molds are identical, each comprising an annular matrix drum formed with non-skid designs, and a number of segmental mold parts forming the enclosing ring, the outer circumference being tapered to conform with the taper of the press head *E*.

In operation, the tread band is placed around the drum with the crown on the inside and the outer mold sections assembled, when the platform is moved forward by hydraulic means and the press head descends, forcing the mold parts together. Steam is then admitted to the chambers provided in the mold and press head, whereby the tread is semi-cured. In the meantime, the second mold has been prepared and when the press head is raised the platform is advanced until the mold is in position to be operated on by the press head. The operation consists in alternately filling and emptying the molds as they are passed through the machine after being acted on by the press vulcanizer.

Thropp Tread Mold

The Thropp tire mold is constructed so as to permit a hard cure of the tire at the tread where there is the greatest amount of wear, and to permit a soft cure at the sides where flexibility is required. The mold

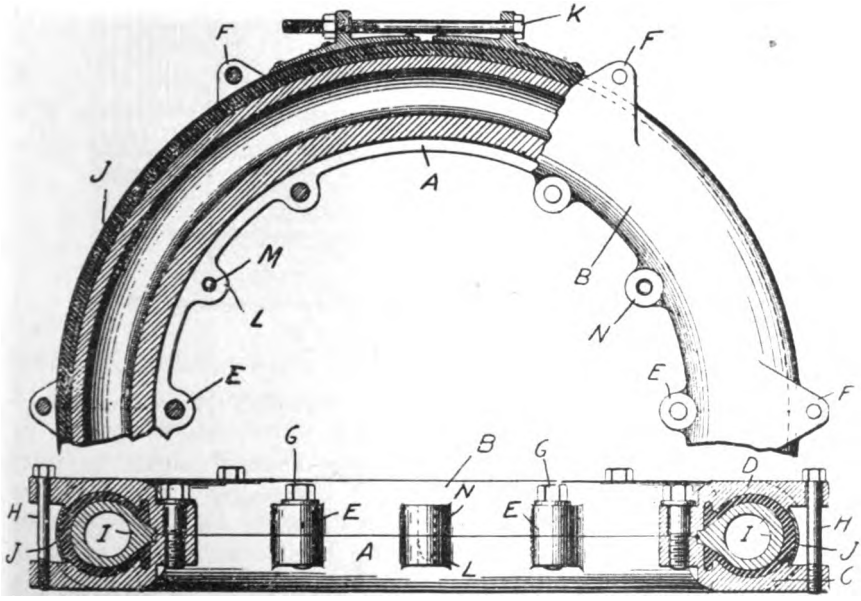

Thropp Tread Mold

comprises two semi-circular annular rings *A* and *B*, having integral tire formers *C* and *D* adapted to engage the sides of the tire and the bead portions so that the casing is cured in the proper shape. The two parts of the mold *A* and *B* have inside and outside lugs, *E* and *F*, by means of which the two parts are bolted together with bolts *G* and *H*. There is provided a hollow core *I*, the base of which fits into a slot in the formers *C* and *D*. In order to cover the tread of the tire, there is used a circular thin metal band *J* clamped together at the ends by means of the bolt *K*. This thin band allows the tread to be exposed to greater temperature than the sides of the casing, thus resulting in a harder cure. To make the two halves of the mold fit perfectly, lugs *L* in the

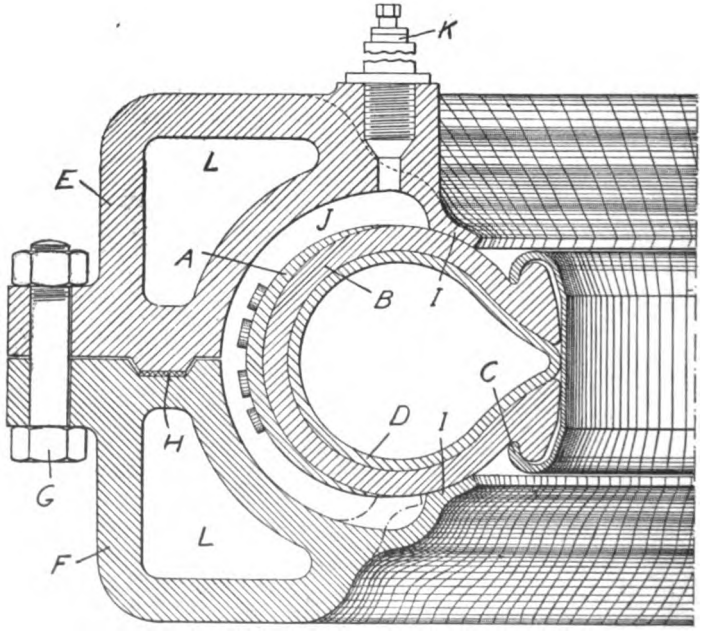

OLIER TREAD MOLD

lower section are provided with dowel pins *M*, which fit into corresponding openings in lugs *N* of the upper section.

OLIER TREAD MOLD

With this mold the tire tread does not come into direct contact with the heating surface of the vulcanizer. The tread *A* is first cemented upon the tire cover *B* and the tire is mounted upon a rim *C* and provided with an ordinary air tube *D*. For protecting the inner tube from

the vulcanizing heat an asbestos lining may be inserted between the tube and the tire. The tire is then placed in the mold, which is made in two parts, *E* and *F*, secured together by bolts *G*. A grooved packing joint *H* is provided between the mold sections to make the tire chamber air-tight. Each of the mold sections has an inwardly projecting flange I which engages the sides of the tire. The walls of the mold are thus held at a distance from the tread and a free space *J* is left between the tire and the mold. Through an ordinary air valve *K* the space *J* is filled with compressed air, while the mold sections are heated by steam introduced into hollow annular passages *L*. When the tire has been inserted and made fast, the inner tube is inflated to the normal pressure. The compressed air is introduced in the space *J* and the mold is then heated by steam. This mold is said to produce a tire on which the tread is vulcanized with an even pressure throughout.

Adamson Tread Mold

When tire treads are vulcanized in two-part molds the gases in the compound are sometimes trapped, causing blisters. Adamson's mold provides a support of powdered soapstone or molder's sand, which

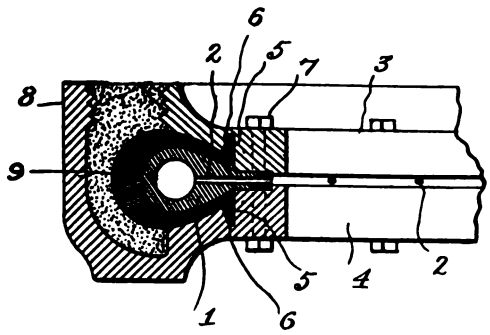

Adamson Tread Mold

surrounds the tread surface of the casing and holds it in shape while the gases are free to escape. Referring to the drawing, *1* is a metal core on which the casing is built up, and which is hollow to permit access of steam through openings *2*. The upper and lower mold sections *3* and *4* respectively have channels *5*, which form the beads *6*, the sections being clamped together by bolts *7*. The lower mold section *4* is extended annularly at *8*, forming a circular channel that surrounds the tread surface *9*.

In practise the built-up tire shoe is placed between the sections 3 and 4, which are then clamped together. This shapes the beads as well as the body of the shoe in the usual manner. The pocket formed by the extensions of the molds is then filled with molder's sand, which is tamped, in the usual manner, and brought flush with the upper edges of the extensions, when the mold is ready for the vulcanizer. The sand surrounding the tread surface of the shoe will maintain the rubber stock—softened by the rise in temperature—against movement, while it also permits the escape of any gases liberated in the rubber.

NON-SKID TREAD MOLDS

Ramsbottom-Turner Tread Formers for Molds

Tread patterns are produced by the use of metal or like formers held temporarily on the tire by an endless elastic strip stretched around the tire, or by a similar strip wrapped spirally around it.

Finlayson Non-Skid Mold

This mold forms the non-skid tread and provides for the complete curing of the tire within the mold in a single operation. The casing, built up on the core, as usual, is placed in the mold which is

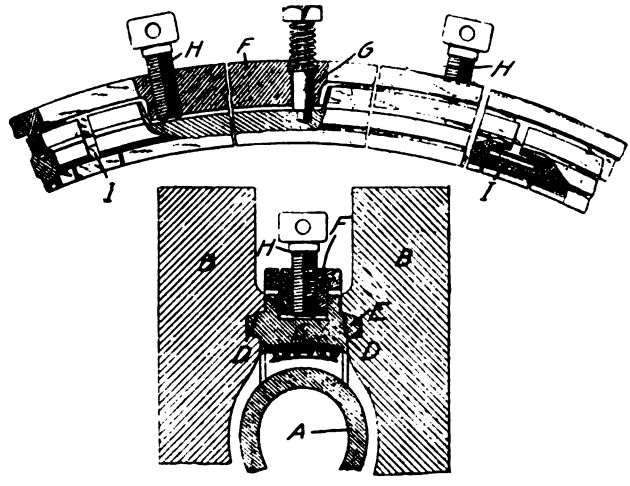

Sloper Non-Skid Tread Mold

then closed. The tread mold—made up of four sections—is forced by a rotating ring against the rubber, forming the non-skid tread. The mold is then placed in a heater press, and the tire, when cured, is removed from the mold by rotating the ring in the opposite direction.

Sloper Non-Skid Tread Mold

This device consists of the ordinary core and a two-part mold that forms the sides of the tire casing. The non-skid tread is formed by ring segments that are held between the upper and lower molds and are pressed against the rubber by bolts carried in a throst ring.

Referring to the drawings opposite, *A* is the core and *B B* the upper and lower mold parts. The tread forming ring *C* is composed of segments and has ribs *E* that align with the grooves *D* of the mold parts *B B*. Referring to the upper drawing, the tread forming segments are adjustably attached at their centers to the ring *F* by spring bolts *G*. The annular thrust ring *F* is drilled and tapped to accommodate the bolts *H*, which bear on the ends of each tread forming segment. The recesses formed in the ends of the segments are filled by the T-pieces *I*, which prevent the rubber from spewing. The core with the tire casing is placed in the lower half of the mold and the upper half is placed upon it with the tread segment between them. These are advanced by the bolts, compressing the rubber and forming the non-skid tread. Clamping the parts together, registers the tread sections.

Hauvette Mold for Non-Skid or Plain Tread Tires

This device comprises a two-part mold and a thin, split, annular rim of metal of the same width as the surface of the tire tread. This

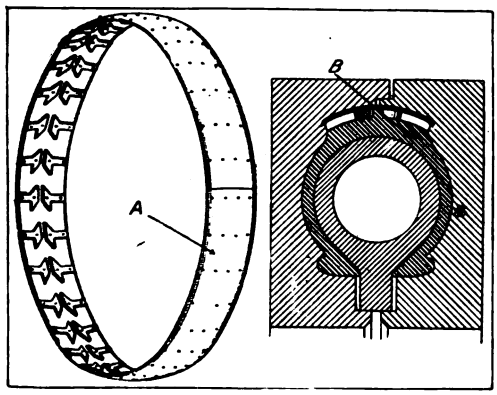

Hauvette Tread Mold

rim may be provided with a design in relief, or the design may consist of a series of separate dies, placed in the mold, to form the tire tread.

In the illustration, *A* is a perspective of the split rim bearing the tread design and *B* shows the rim and tire enclosed in the mold.

The tire and mold are assembled in the usual way and after vulcanization the mold is opened and the rim removed from the tire.

All kinds of tread designs can be obtained by having the plates ready with various designs in relief. These plates are light and cheap, and their sets of dies can be arranged economically and rapidly.

By substituting smooth plates, treads with smooth surfaces can be obtained. Thus the same rims serve for making plain or non-skid treads.

STUDDED TREAD MOLDS.

Internal Pressure Studded Tread Molds

This is a mold for vulcanizing pneumatic tires with studded non-skid leather tread bands. The mold consists of two parts with a rigid ring to form a steam-tight joint between the edges of the tire casing and the mold. One or more recesses in the mold parts are employed to receive the projecting non-skid studs on the leather tread band, the recesses communicating with the atmosphere by means of ducts. Air or gas for compressing the inside of the tire is formed through a groove formed in the outer face of one of the mold parts, and which communicates with a pipe and hole formed in the joining ring. To prevent burning of the leather band a strip of cotton fabric is placed between the leather band and the mold.

Whitehead Studded Tread Mold

With this mold, the tire carcasses are built up in the usual manner, on a core, after which a semi-cured tread strip provided with studs or other suitable armoring, separately prepared, is applied to the tire casing. The intertices between the studs are filled flush with plaster of Paris, or a rubber-like composition that can be readily removed after vulcanization, and the whole casing is then cured in the special mold. Rubber may also be used, vulcanized along with the tread and allowed to remain in the finished tire, thereby completely embedding the armoring.

The mold consists of two side rings or plates shaped to suit the contour of the tire casing and its beaded edges, each ring being in one piece. That sectional portion of the mold for compressing the tread is in two or more parts and arranged to fit the side rings by means of a groove on each side into which the flanges on each side ring fit. The sectional ring is provided with lugs through which bolts may be passed to draw and couple them together end to end so as to form with the two side rings a complete mold. The side rings are clamped together by bolts or the like.

LEATHER TREAD MOLDS

Stocks-Bell Leather Tire Cover Mold

In apparatus for molding tire covers from strips of wet or rubber-treated leather, the core consists of one or two annular dies and the outer mold comprises four adjustable members, and two separate recess forming rings. If the cover is to be dried outside the mold, the recess forming rings may be perforated. A separate die, formed of radially-movable segments, may be used to turn in the edges if bead cores are to be fitted in the edges of the cover. A filling piece is used during the preliminary stages to take the place of the tread.

Bell Mold for Leather Tire Casings

Leather casings for pneumatic tires are made by forming a strip of undried chrome leather in a U-shaped mold. The projecting edges are turned inward, covering the beads, which are cemented and pressed in place on the casing by movable dies.

MISCELLANEOUS MOLD EQUIPMENT.

S. & B. Flexible Steel Molds

Flexible steel molds for making straight-side or clincher tires by the full molded process are said to have fully demonstrated all of the numerous commendatory claims made by the manufacturer.

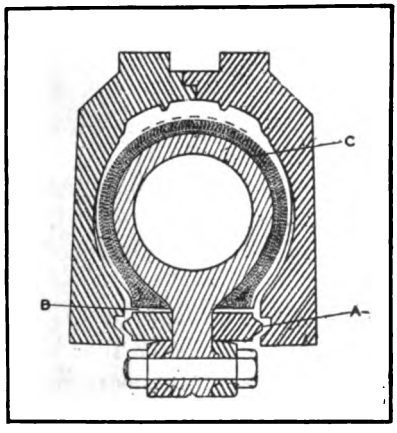

S. & B. Flexible Steel Molds

The curing of either fabric or cord tires on solid collapsible cores is made easy. Each half of the mold is provided with saw cuts to allow contraction of the inner diameter of the mold. Each half is

dished and made to come together at the tread first, then by applying pressure the mold is closed gradually and progressively toward the beads, forcing the air and excess rubber ahead of the contact points, stretching the fabric also and finally landing the surplus rubber into the overflow cavity A, while all harmful movements of stock toward the tread are eliminated.

By this process it is possible to use beads of larger diameter than those generally used, leaving more space at *B*, and more room for contraction of bead diameters, which allows more stretch to the sides of the tire carcass during vulcanization. Before placing the tire in the molds, beads and sides of tire are pulled loose from the core to the treading *C*, leaving the tread portion cemented to the core.

Southwark Forged Steel Tire Molds

Forged steel tire molds are rapidly coming into widespread use because they produce better tires than iron and steel castings and reduce the cost of production. Tires vulcanized in them possess a smoother and more finely finished appearance resultant from the finer grained surface of the forged steel. Greater uniformity of size and appearance is secured because forged steel molds are exact duplicates and do not warp or increase in diameter from repeated expansion and contraction.

Increased production results from the 20 to 35 per cent. lesser thickness of forged steel molds due to the higher tensile strength of the metal. This increases the capacity per vulcanizer correspondingly, likewise decreases the storage space required for molds and also the curing equipment necessary to meet a given production. These thinner molds being 25 to 60 per cent. lighter, they are loaded and unloaded with greater facility and rapidity.

Both of these causes of increased production are important factors in reducing production cost. Because of the smoother surfaces of forged steel molds, tires are more easily stripped from them, the molds can be less frequently and more easily cleaned. Forged steel molds are not subject to injuries and breakage, and there is less delay on account of repairs. Experience has shown that because of the undiminished strength, the permanency of the smooth surfaces, which are proof against damage from sandblast cleaning, and the absence of breakage, warping or growth of diameter, no forged steel mold need be discarded for any other reason than a change in the design, beyond the possibility of recutting.

The process through which the material passes to make these forgings is briefly as follows. The ingot, which is made to the right

weight for the finished mold plus the discard, is hammered down in the form of a flat disc which is punched in the center. This is then hammered over the horn of an anvil under a large steam hammer until it is worked into a roughly forged ring which is next passed to a tire rolling mill. Here it is rolled into a smooth ring of proper dimensions to fit dies of a hydraulic press. After reheating to the proper pressing temperature it is placed underneath dies of a 10,000-ton hydraulic press in which it is formed into the final shape ready for machining.

SOUTHWARK FORGED STEEL TIRE MOLD

The forgings are then placed in a slow annealing furnace for the purpose of making the material of uniform hardness and for making the machining operations as easy as is consistent with forgings of moderate carbon content.

ABCILIUM METAL ALLOY FOR TIRE MOLDS

Tire molds cast from ABCilium metal alloy are said to be so smooth that their surfaces do not require machining, polishing only being necessary, and in some cases even this may be dispensed with.

They are, moreover, impervious to all acids used in the manufacture of rubber goods and unaffected by excessive heat of soap-stone blasting.

The thermal conductivity of this metal is even greater than that of copper, consequently an instant heating or cooling is possible. A mold made of this alloy is 70 per cent. lighter than an iron mold made off the same pattern, and may be constructed lighter than iron molds now in vogue. It is claimed that cast iron tire molds weighing 1,000 pounds will weigh less than 200 pounds when made of this alloy, all factors of safety being considered. The specific gravity of ABCilium is 2.51, which is lighter than 99 per cent. pure aluminum.

Aluminum Molds and Branding Plates

Steel and iron molds and cores have been and still are very generally used, though they leave much to be desired in the way of adaptability. They are not only heavy to handle, but used in connection with the process of vulcanization are more or less seriously subjected to rusting and pitting, thus transferring rough and discolored surfaces to the rubber cured in contact with these defects.

These defects have been very completely removed by the introduction of aluminum alloy to replace steel and iron. A few facts with regard to the characteristics of aluminum will be of interest in this connection.

In the first place sulphur has no effect on it at all; further, it is light, having little more than one-third the weight of iron. The cast metal withstands heavy pressures employed in molding and as it polishes perfectly imparts a lustrous finish to the molded goods.

Aluminum can be rolled very thin, in fact, as thin as gold, and there is a great demand for strips about ten one-thousandths of an inch for brands. When a pattern number or lettering has to be stamped on a tire it is, of course, necessary to interpose a thin strip of metal bearing the lettering or design to be impressed in the rubber. Some rubber manufacturers use tin for this purpose, but tin is more than three times as heavy, and although it costs more to the pound, aluminum is at least seventy-five per cent cheaper, because of the greater area due to its lesser gravity.

Gorton Engraving Machine for Non-Skid Tread Molds

For engraving tread designs, firm names and tire sizes on vulcanizing molds used in the manufacture of pneumatic tires of all description, the Gorton engraving machine works on the familiar pantograph principle, where a tracing pin at one end of the pantograph is guided over a carefully prepared copy of the design which it is desired to reproduce, and the engraving tool at the opposite end of the pantograph accurately cuts this design in the tire mold.

A is the tracing pin and *B* the engraving tool. The copy to be followed is fastened to the holder plate *C*, while the mold to be engraved is clamped to the index plate *D*, which can be adjusted to any angle by the hand wheel *F*. The handle *E* provides for adjusting the position of the work holder. The drum *G* is provided for moving the work through fractional parts of a revolution. The "copy" guides the

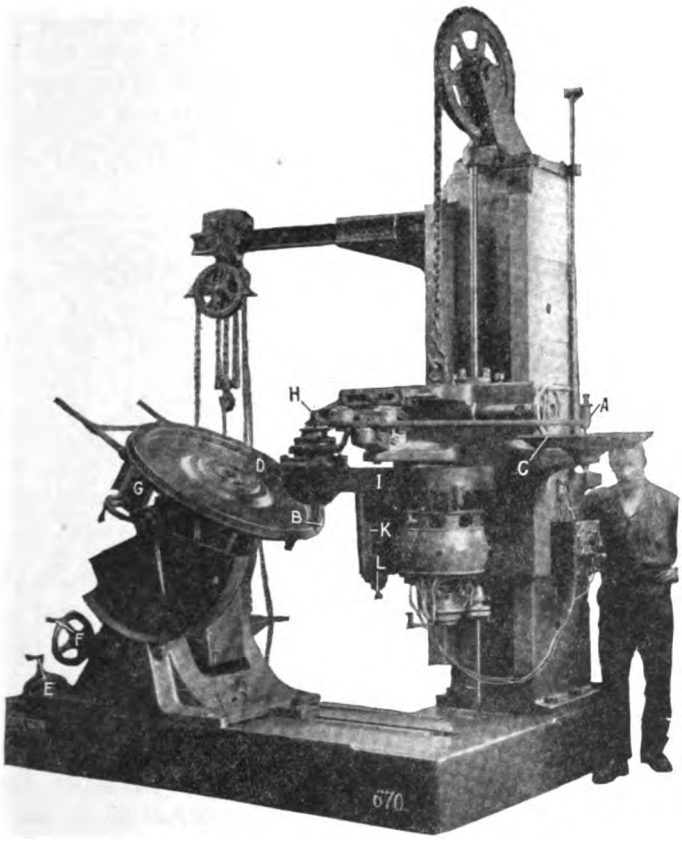

GORTON TIRE MOLD ENGRAVING MACHINE

engraving tool in a horizontal plane, but owing to the fact that the mold is concave, a template *II* is provided to control the vertical movement of the engraving tool.

The vertical cutter spindle is mounted in the frame *I*, to which the motor spindle drive is also attached. The motor and spindle mechanism are supported on the link *K*, which in turn is carried by the

pivot *L*, and a similar pivot on the column side. These pantograph pivots are fitted with radial and thrust ball bearings, so that the movement is very sensitive.

Wheeler Tire Mold Cleaning Machine

The old, laborious method of cleaning tire molds by hand may be superseded by this ingenious machine.

Referring to the drawing, the base *A* supports the table *B*, on which rests the mold *C* that is to be cleaned. The table and mold are rotated by an internal gear and pinion driven by worm gearing from the main driving shaft *D*, and controlled by a friction clutch operated by the treadle *E*. The large rotary wire brush *F* revolves in the lower

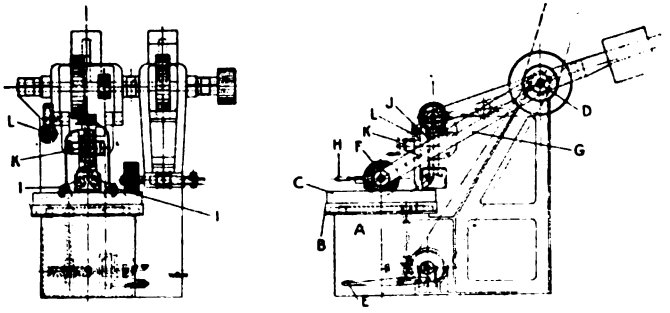

Wheeler Tire Mold Cleaning Machine

end of a swinging arm *G*, and is driven by a belt from the main drive shaft *D*. The brush is moved laterally to accommodate sized molds by a hand lever *H*. Small brushes *I*, *I* are supported on arms that swing around the vertical shaft *J*, the angle of the brushes being adjusted by hand-wheel *K*. Adjustments for different mold sizes are obtained by worm gearing operated by hand-wheel *L*. All the mechanism is fulcrumed on the main drive shaft *D* so that the large and small brushes may be raised when placing or removing a mold on the table.

Duncan Overhead Carriers

Pneumatic tires with building cores inside and ring molds in place ready for vulcanization are exceedingly heavy and this overhead trolley system with special hooks on which to suspend the tires from the carriers provides an efficient means of transporting the built-up tires from the finishing room to the press room and to the vulcanizer for curing. An overhead system economizes floor space, promotes convenience and cuts costs.

Meyers Tire Mold Conveying System

This invention comprises a system of conveyors and mold-handling apparatus operating continuously, whereby the tire molds are filled, moved in and out of the vulcanizers, and the cured tires removed from the molds which are then cleaned and refilled. Referring to the illustration. Fig. 1 is a plain view at the plane of the vulcanizers, and Fig. 2 is a side elevation.

Suspended on hooks, the uncured tires and cores are successively delivered by the conveyor *A* to the loading station *B* where they are placed in the molds. At station *C* the upper mold halves are lowered and registered with the lower halves, when the molds are delivered to the heaters *D*. At the same time molds are being discharged from the

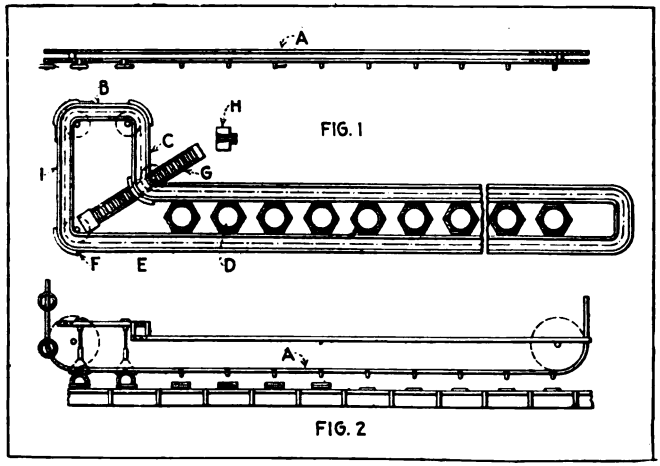

Meyers Tire Mold Conveyor

heaters and conveyed to station *E* where they are opened, the upper halves being elevated by the conveyor. The tires are then removed from the molds at station *F* and placed on the conveyor *G* which delivers the tire to the stripping machine *H*. As the mold halves pass station *I* they are cleaned preparatory to recuring the uncured tires.

Wetter Serial Numbering Machine for Mold Strips

The thin strips of tin or aluminum that are embossed with serial numbers and used in the molds for reproducing the number of the tire, are made by the machine shown here. It is constructed on the same lines as a sub-press and is used in connection with an ordinary power punch press. This machine will automatically emboss consecu-

tive numbers on thin, soft metal, either on separate pieces cut to proper size or from a roll of strip metal.

The numbering wheels are constructed on the principle of male and female dies and as the strip is automatically fed between them a raised number is formed on the metal at each stroke of the press. The numbering heads may also be constructed with any number of wheels, and a letter wheel to follow or proceed the number is supplied

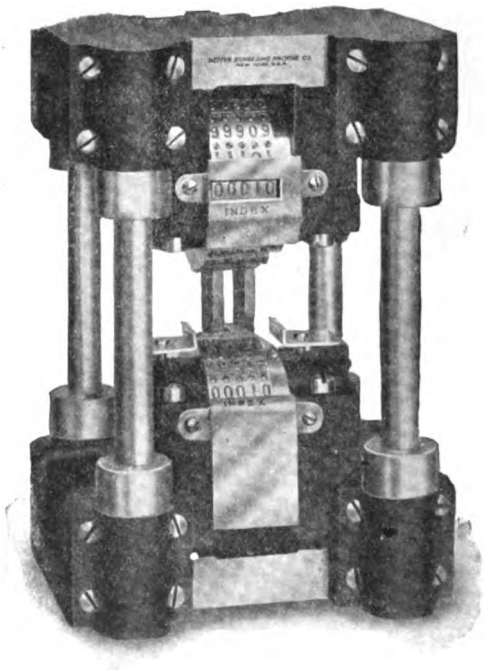

WETTER SERIAL NUMBERING MACHINE

if so desired. Moreover, the machine can be constructed to duplicate or triplicate each number.

ROOVERS EMBOSSING PRESS

Type embossing presses are of use in rubber for making pattern, letter and serial number plates for branding tires. The metal tape from which the plates are made is furnished in rolls and may be of zinc, brass, frosted aluminum or colored aluminum. The plates may be made with one letter or figure adjoining as large a number of letters or figures as may be desired.

The metal strip is fed automatically between circular die plates on which are the alphabet, figures, period, apostrophe, dash and slanting line for fractions. The dial is in plain view, showing all the characters corresponding with the die plates, also the words, "start," "finish" and "space."

To make a plate the dial is turned so that the word "start" is under the index; the handle is then pressed down, thus feeding the strip, so that the beginning of the plate has the right length. The dial is then turned so that the first letter or figure desired comes under the index, when the handle is pressed down again, feeds the strip the proper distance to receive the character and embosses it on the strip. The dial is then turned and the handle pressed down on whatever other

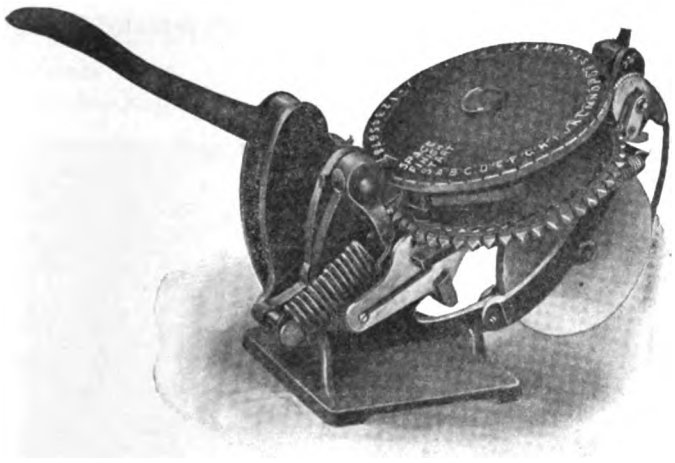

ROOVERS EMBOSSING PRESS

characters are desired. The plate is completed by pressing down the handle on the word "finish," which cuts off the plate, rounding and perforating its end and rounding and perforating the beginning of the next plate.

By this system plates may be embossed with high or low figures or letters in the following sizes: ⅛, 3/16, ¼, 9/32, 5/16, ⅜, ½, ⅝ and ¾-inch type or letters.

DUNLOP-MACBETH MOLD OPENER

To obviate the heavy work of prizing apart the two halves of the mold with hand levers after vulcanization in order to remove the cured tire in an undamaged condition, this device has been invented.

For the purpose of this invention, the two mold shells are formed with beveled surfaces, which engage members having similar beveled parts in such a manner that the said members (termed the "mold openers") force the mold shells apart and engage with or grip the core to retain it out of contact with the mold shells after the latter have been separated. The mold openers may preferably form part of or be mounted on a hydraulic ram or other elevating device so as to be raised into a suitably supported mold ready to engage with and open the mold shells, which latter operation may be effected by hydraulic or other appropriate means. If desired, however, the mold openers may be mounted on any suitable form of supporting or suspending device for enabling them to be placed into the mold, and they may be moved to effect the opening of the mold shells and engagement with the tire core by hand operated mechanism such as levers actuated by right and left hand screw threads.

CHAPTER XIX
TIRE BUILDING
Building Tire Casings By Hand

THE tire builder mounts the collapsible steel core upon which the tire is to be built on a building stand, generally cementing it so that the first ply of fabric will stick in place. The first ply is then stretched on the core and spliced, rolled down with a hand roller on the sides of the core, and trimmed with a knife at the base. Tire builders have several special tools with which to smooth the plies down uniformly.

The following plies are put on and rolled down in the same manner, the beads being put in at the proper time according to the size and the number of plies to be used, and the next ply of fabric is worked

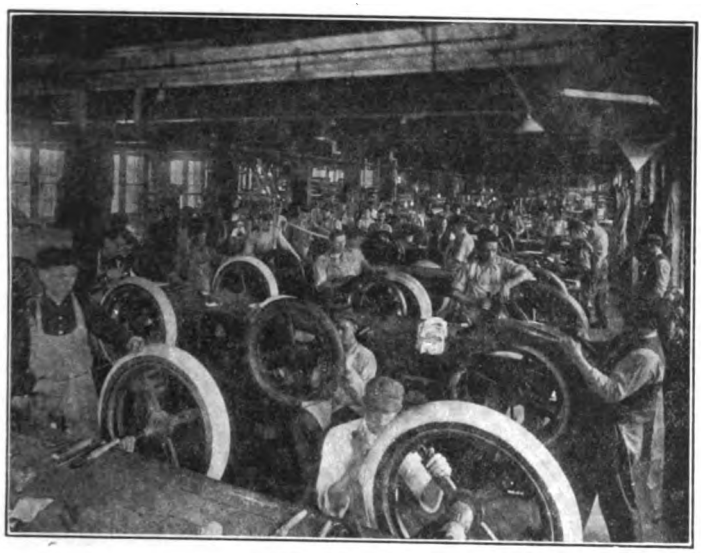

Automobile Tire Building Room

down over it to hold it in place. Average tires have five or six plies, but for large diameters as many as eight plies are used. Thorough rolling of each ply is essential to insure air free contact, perfect adhesion and solidity. This is called "stitching."

After all the fabric plies and the beads have been assembled, the bead "tie-in" is made. This consists in trimming all plies at the toe

of a clincher bead, or of folding the plies alternately across the base of a straight-side wire bead and trimming them. A layer of cover rubber for supplying cushion stock and side walls is then put on in strips, lapped and rolled down with hand rollers in much the same way as the fabric is applied. This is generally a sheet of rubber about one-sixteenth of an inch thick or more, and of the same compound as the rubber on the fabric. It acts as a cushion between carcass and tread and also protects the fabric of the side walls. A narrow strip of very open weave friction coated fabric about the width of a non-skid tread and known as the "breaker" strip is then applied, its function being to assist in the strength and flexibility of the union between the duck body and the thick, tough rubber tread layer. After the breaker strip is in place the tire is ready to have the tread applied, which completes the building up process. The tread is made up independently of the tire, and in the case of the so-called single cure tires, which are wholly vulcanized at one time, the tread is applied to the carcass directly after the breaker-strip. The complete uncured tire, core and all, is usually weighed to make certain that it comes up to the standard.

Machine Methods of Tire Building

In most large tire factories hand work has been practically superceded by the quicker methods of machine work, particularly in building up tire casings. To-day special machines cut the rolls of rubberized fabric into strips, while other machines apply these strips to revolving cores or formers shaped like the inside of the tire. These machines apply the fabric under uniform tension. There are machines for cutting fabric strips and for wrapping with cloth for the open cure and later with paper for shipping. There are bead formers and molds, buffers, special calenders and plying machines for the treads, and many minor machines and tools that not only save labor but turn out a better product. So too with the presses or vulcanizers. They have been adapted to modern needs and quantity production. They hold many molds, are self locking and so placed that the heavy molds may be handled easily and quickly.

Most tire manufacturers have special methods of their own, using forms, machines and implements adapted to their particular requirements. No two manufacturers use exactly the same methods or materials, although the general principle of construction is practically the same. For example, some use coated or impregnated fabric while others use part coated fabric and part frictioned stock with pure gum strips between. The methods of applying the beads, treads and of vulcanizing also differ greatly.

The method followed with one of the best known carcass building machines is as follows:

The duck used is generally made from Sea Island or Egyptian cotton of about 17¼ ounces weight to the square yard. This is frictioned on each side, then coated on one side, except the first ply, which goes on the inside of the tire. This inside ply is coated on both sides. The fabric is cut on a 45 degree bias on a bias cutting machine and joined up in lengths on the supply roll of the making machine, each joint being taped with a strip of thin rubber so it will not pull apart. The fabric strips are then rolled up with liner strips to prevent the layers of frictioned duck from adhering to each other. The tire carcass is built up on a collapsible hollow core. Each layer of coated duck is laid on with the coated side up, and every joint during the building up is rubber taped, the quality of the rubber tape being the same as that used in coating the duck.

The core is placed in the machine and covered with cement. The first ply of fabric must be cemented to the core, but the succeeding plies readily stick together without cement. First two plies are run upon it and then these are cut down to the inside edge after being thoroughly pressed into place by use of the power stitcher. In the case of clincher tires the plies are trimmed by the machine. A guide ring to locate the correct position for the bead is next placed in position and the bead put on even with its edges.

The remaining plies are then rolled on, two or more as the requirements may call for, but are not rolled down over the bead. The tire is then taken off the making machine and given to an operator who does the finishing on a building stand, the same as in making hand built tires. Next, a narrow strip of two-ply duck having a light friction coat is placed around the tire, and the top plies are pulled back over it to lift them away from the bead temporarily. The bead is then cut and underneath it a flat metal ring is placed to work on. The surplus on these edges of the two under plies are next trimmed off flush with the edge of the clinch.

The European method of tire making varies from the American in only a few minor points. For example, fabrics are often coated with a spreader instead of a calender, and instead of coating one side of the duck, strips of pure gum are placed between the plies of frictioned duck in making up the carcass.

Of the top plies the first is laid over the bottom of the bead and trimmed off flush with the inside edge, after the jointed laps of the fabric are cut off so as to get a flush surface on the bottom

of the bead. The quarter-inch retaining strip is pulled off and the top ply turned over the bead, first trimming it so that it laps inside of the tire about ⅜-inch or more. That is, the top ply entirely surrounds the bead and extends on the inside of the tire about ⅜ of an inch. Then it is thoroughly rolled down and "stitched."

The chafing strips are next laid around the bead and tucked under ½-inch in the same manner as the top ply of duck, which will make the chafing strip ½-inch on each side of the tire and about ½-inch on the face of the bead. Then the flat metal ring is taken out, the bead laid again into place and well rolled down. Next there is laid on the surface a ¼-inch strip of two-ply frictioned duck as a guide to trim to and placed to the edge of this—that is, the edge away from the bead base—a strip of gum 1¼ inches wide. The carcass is then given a light moistening with naphtha and it is ready to receive the bottom tread, the weight of which varies according to the weight of frictioned duck used. This is run in three plies and laid on so that it laps over the frictioned duck guiding strip and is rolled down to this strip, leaving a mark on the tread. The strip is then pulled out and the excess of the tread cut off at the mark with a special two-blade knife. The tire is then pricked for air pockets and is ready for carcass vulcanizing.

After carcass curing, the tire is roughened by buffing and is then ready for treading. It is first given three coats of cement, each coat being dried before applying the next. The tread is made up in several sections of various widths, the two widest being on the outside and the others stepped up with the narrowest in the middle. A breaker strip is built up of two strips of rubber and one of duck, with the fabric in the middle, and the three parts are rolled together. This is added to the tread and the whole is rolled together in a special rolling machine. It is then placed on the carcass with the breaker strip down, the joint being cut on the bias. The side is first run around with a ¼-inch, two-ply guiding strip, to which the tread is rolled. This strip is then pulled out and the excess trimmed to the mark formed by it. The tire is then placed on the curing bag, side rings are attached and it is inflated to about 80 pounds air pressure. It is then given two straight wrappings by hand and is finally cross wrapped by machine, after which it is further inflated to about 90 pounds and then vulcanized in open steam.

Machine vs. Hand Methods of Tire Building

The old-time hand method of building tire casings has long since proved unequal to the present high production demands. The develop-

ment of tire building machines has therefore progressed steadily and the modern American type is to a considerable degree automatic. The strips of frictioned fabric are supplied under uniform tension to the revolving core and the successive plies are smoothed down by rollers. Two men on a carcass building machine can turn out ninety tires in eight hours. There are numerous machines which apply either built-up or calendered treads to the fabric carcass of the tire and roll them firmly into place. Other machines buff and cement the fabric carcass and apply, center and roll down semi-cured anti-skid endless tread bands.

Carcass building machines have done much in tire manufacture. It requires a tremendous pull to properly stretch the fabric over a tire building core, and experience and a high degree of skill to roll and work it into place so that the flat fabric will perfectly conform to the rounded surface of the core without ridges or wrinkles. Thus the durability and longevity of a tire built by hand are largely dependent on the skill and strength of the workmen who made it.

To give maximum mileage every ply of fabric must be stretched to an absolutely even tension over each portion of the tire. Otherwise the ply which has been stretched the hardest gets all the strain and may break. Then the slack in a loose ply will work up into a ridge, which will soon rub a weak spot in the casing, and after one to two thousand miles of service will blow out.

Various Patented Methods

In addition to the more common methods of building up and curing tire casings already described there are numerous patented methods employed to a greater or less degree by certain tire manufacturers. Among them the following may be noted.

The outer covers of pneumatic tires are generally built up with fabrics coated with a rubber solution, and cut bias at an angle of about 45 degrees. Laroche, a French inventor, inserts between the superimposed canvas layers a woven fabric cut bias. This fabric is coated and equally elastic in both directions, viz., in the plane of the wheel and in the direction perpendicular to the said plane. Its intended purpose is to provide equal resistance in both directions.

Under the Raymond B. Price patent all danger of the formation of air pockets between the various layers of gum and fabric while being assembled is obviated by building up the complete tire in vacuum with a minimum of air, moisture and the like to be entrapped. The rotating core of the tire building machine operates within an air-tight casing having a plate glass top and a pipe at the side connecting with a suitable exhausting apparatus.

Quite apart from common practise is the method of carcass construction described in the Charles T. Dickey patent. The frictioned fabric strip of loosely woven material is wound spirally around an annular form. The casing is then split around its inner periphery and the strips folded back, enclosing the bead wires and reinforcing the tread.

The application of strips of building fabric to the tire core is facilitated under the John R. Gammeter patent and greater uniformity of the carcass is assured. The middle portion of the fabric is stretched to a greater degree than the edges and then shaped by cupping and applied while curved to the core.

Under the J. H. Coffey patent pneumatic tires are molded on a core in a sectional mold. The tread portion is removed radially, while the sides and edges of the tire are stretched in a direction away from the tread. The tire is subsequently removed and vulcanized.

Under the Ferdinand B. Brucker patent the carcass is built up with successive fabric plies and the beads applied in the usual manner with the exception, however, of the tread and fabric strips forming the outer covering. These parts are mounted one upon the other as they come from the calender, in the following order: First comes the strip that covers the tread portion and extends part way down the sides of the carcass; then the breaker strip and the filler strip that abut against the edges of the breaker strip, and finally the tread strip. A pair of rolling devices, comprising two spherical bodies mounted in ball bearings at the ends of two co-acting arms, exert a circumferential as well as a radial action in rolling the slab on the carcass.

The Elmo H. Trump patent provides an unusual method of applying the tread to pneumatic tires. A strip of tread stock is placed in each of two mold sections, each strip being subjected separately while in its respective mold section to the action of a former; the members are clamped together about a fabric carcass containing a core, and the core and carcass are expanded to cause the latter to adhere to the tread strips in the presence of a vulcanizing heat.

Three patents granted to Raymond B. Price cover the vulcanization of tires with a fluid medium. According to the first, tires are vulcanized in a bath of calcium chloride or other heat transmitting mediums of a fluid nature under the vulcanizing temperature. The second provides for surrounding the tire with a heating medium and subjecting it to pressure. Under the third, layers of fabric are interposed between layers of rubber. The fabric is first subjected to fluid pressure and then a greater pressure is applied to the exterior rubber layers. This removes the moisture and compacts the layers of fabric and rubber.

Fabric Feeding, Shaping, Stretching, Tensioning, Rolling and Stitching Devices

In connection with fabric tire carcass building machines numerous devices have been developed for feeding the frictioned strips to the building core or mandrel at constant tension and winding up the protective lining; for shaping the fabric by stretching to conform more nearly to the curvature of the core, and for smoothing it by rolling or otherwise pressing the several plies into firm contact.

Vincent Fabric Shaping and Tensioning Device

In connection with his tire building machines, described elsewhere, Vincent invented a device for preliminary shaping and tensioning of the fabric or rubber. The fabric, etc., passes over an adjustable stretching roller, consisting of a series of shaped sections, each carried by a pair of toggles hinged to a boss which is adjustable on the roller shaft. The preliminary shaping is effected on a bulbed roller, or a series of such rollers capable of relative axial adjustment. For preventing recoil of the fabric, etc., a concave roller or block is mounted on a balance rocking lever fitted with an operating handle, the concave roller or the tension roller from which the fabric is fed to the carcass building machine having a spiked surface.

Fiedler Fabric Shaping Device

Reciprocating fingers move across a revolving former or core in shaping rubbered canvas layers to make a tire carcass. The fingers are formed in telescopic parts and their ends are pivoted or fitted with spring-pressed rollers, in order to allow the fingers to work over the tire beadings and their ends to yield circumferentially to prevent creasing. The fingers are carried by a reciprocating frame, and there are stops operated by hand to cause the fingers to follow the profile of the former. In one type of this device there are a number of fingers of different lengths, and a thin metallic frame prevents the canvas from sticking bodily on the former or core.

Mathern Tire Smoother

Mathern's device is for smoothing the sheets of fabric as they are built up, one above another, on the tire core. The apparatus is constructed as follows: In the frame *A* is mounted a crank shaft *B* driven by a pulley *C*. To the connecting rod *D* is linked a sliding block *E*. On the front of this block are a number of projections *F* to which are attached smoothing fingers *G*, which press upon the outer surface of the core so that the canvas is pressed smoothly against

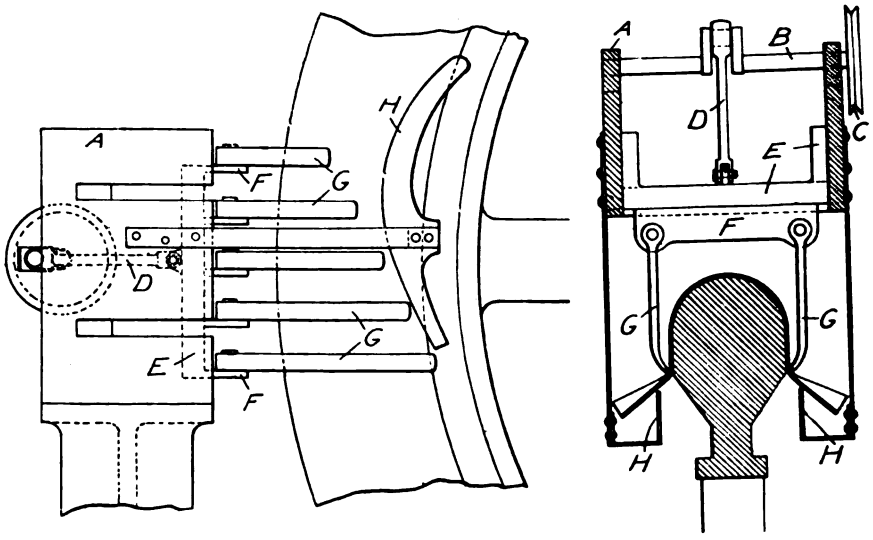

MATHERN TIRE SMOOTHER

the core. Attached to the frame *A* are two curved guides *H*. These guides hold the edges of the fabric away from the base of the core so that the fabric is smoothed down more easily by the pressure of the fingers *G*. If these guides were not used the fingers would crumple up the fabric instead of smoothing it down over the core.

BRUCKER FABRIC STRIP FEEDER

Brucker's machine feeds strips of frictioned fabric from stock rollers to a power driven tire core. The reel frame is mounted on a shaft journaled in two side frames. It carries four power driven fabric rollers and four friction driven wind-up rollers for the lining. The feed of the frictioned fabric to the core is regulated by a tension weight and the lining is wound up on a separate roller. When one stock roller is emptied another is brought in position by turning the drum.

GAMMETER FABRIC FEEDING DEVICE

In the operation of Gammeter's device, the fabric strip is led from the roller over the tension rollers and applied to the tire core. This is driven by the usual mechanism and serves to propel the measuring wheel through frictioned contact. The fabric feeds to the core as fast as the tension roller will allow it, and since the roller is of smaller diameter than the wheel and rotates with it, the fabric is cor-

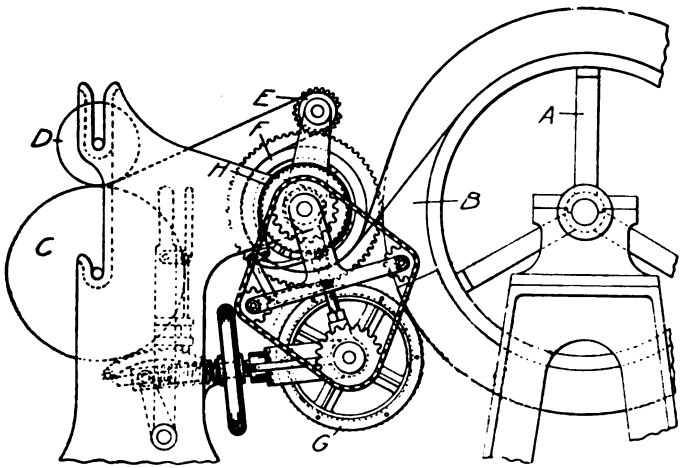

GAMMETER FABRIC FEEDING DEVICE

A—Chuck. **B**—Core. **C**—Frictioned Fabric Roller. **D**—Liner Roller. **E**—Auxiliary Tension Roller. **F**—Main Tension Roller. **G**—Measuring Wheel. **H**—Brake.

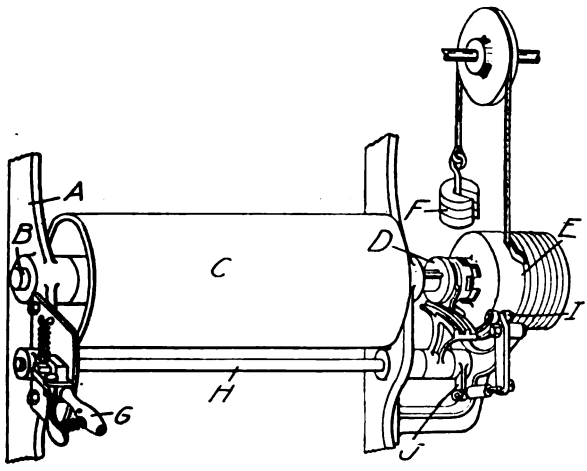

NALL COUNTERWEIGHT TENSIONING DEVICE

A—Revolving Frame. **B**—Tension Roller Shaft. **C**—Tension Roller. **D**—Jaw Clutch. **E**—Grooved Drum. **F**—Counter Weight. **G**—Clutch Lever. **H**—Clutch Operating Shaft. **I**—Brake. **J**—Brake Arm.

respondingly stretched over the middle or larger diameter of the core. The resistance to rotation of the main tension roller is furnished in large part by a brake. The pull exerted by the main tension roller will produce a continuous leftward pressure in the frame, causing the brake to contract upon its drum.

Nall Counterweight Tensioning Device

This device is applied to the type of tire building machine that carries the rolls of frictioned fabric on a revolving frame and delivers the fabric strip to a revolving core. The fabric and liner roller and two guide rollers are not shown. The fabric strip is carried from the stock roller around a guide roller and then around the rubber covered tension roller. It is then passed around another guide roller and the end applied to the tire core, which is revolved by the usual means. Previous to this, however, the operator shifts the clutch lever to its upper position, which moves the segment lever and throws in the jaw clutch.

The core is then revolved and the fabric passes around and revolves the tension roller. This turns the grooved drum and the cord is wound around it, raising the counterweight, which places a tension on the fabric that is even and continuous throughout the operation. As soon as a strip of fabric has been wound on the core, the operator moves the lever downward, thereby throwing out the clutch and applying the brake to the drum.

Nall Friction Tensioning Device

Two pressure rolls that revolve in bearings supported by two side frames are placed one above the other, and are adjustable vertically. Directly opposite these rollers is an idler roller journaled in the side frames. The fabric is passed around the lower roll and up between the pressure rolls, and then around the idler roller and back again between the pressure rollers. When the rollers are brought together friction is established between the fabric moving in one direction and the same fabric moving in the opposite direction, producing the desired tension.

McMahan Tensioning Device

A plurality of stock rolls for frictioned fabric of different widths are mounted on a reel. The fabric is fed to the core by feed rollers that stretch the fabric. The feed rollers are driven by a friction wheel that contacts with the core and regulates the stretch of the different fabric plies as they are applied to the core.

Fisher Fabric Stretching Disks

The object of this invention is to apply a positive and predetermined stretch only to such points in the fabric strip where stretch is necessary to make the fabric conform to the shape of the core. Thus, longitudinal stretch in the margins of the fabric strip is eliminated, puckering obviated and the stitching operation reduced to a superficial rubbing.

The drawing is a side elevation of the machine, showing a tire core *A* mounted and driven in the usual way. On the table will be seen the stock roll *B*, from which the frictioned fabric strips *C* are passed around an idler roller and then down and around the stretching drum *D* to the core, the liner being wound up on the roller *E*.

The stretching drum is made up of 11 disks of equal diameter, comprising annular rings and graduated friction surfaces, assembled

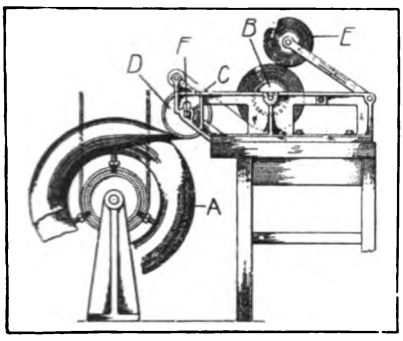

Fisher Stretching Disks

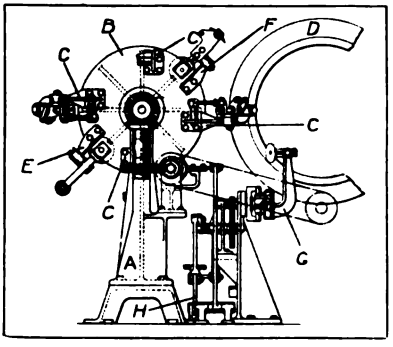

Griffith Mechanical Stitcher

side by side on the stationary shaft *F*. Each friction disk revolves on the shaft at a surface speed relative to the speed of a corresponding portion of the core. A pronounced drag is thereby produced on the middle of the fabric, the edges being free to travel unhindered and the intervening portions are retarded to a degree corresponding to the drag produced by the friction disks over which that part of the fabric passes. Thus the fabric is built up on the core in a smooth and uniform manner.

Griffith Mechanical Stitcher

In this machine the operation of stitching and shaping the fabric down around the sides of the core is mechanically and automatically performed in a smooth and even manner.

The drawing shows a side elevation of the machine and the base *A*, that supports the driving mechanism. *B* is a turret that revolves

in a vertical plane on opposite sides of which are bolted four co-acting pairs of stitching rollers *C*. As each successive pair of tools comes into operative position on each side of the core *D*, it shapes or stitches the fabric further around the core, a revolution of the turret completing the stitching of one fabric ply.

After a certain number of plies have been laid on the core, bead ring applying rollers *E* are brought into position and the bead rings are placed by being fed between the rollers and the revolving core. When the fabric plies are to be trimmed the device *F* is positioned and the cutting effected by the rolling action of the cutters, the requisite pressure being obtained by spring adjustment. The machine thus described is adapted to stitch the fabric plies on the core and under the bead rings, to apply the latter and stitch other plies down to the bead rings. Before the trimming is done the outer layers are stitched around the bead rings by a pair of disks carried by arms *G*, and operated by treadle *H*.

Power Brushes in Tire Manufacture

Wire wheel brushes are used extensively by manufacturers of pneumatic tires, tubes and rims. Specialists have studied the problems of tire manufacturers and have developed certain rotary wire

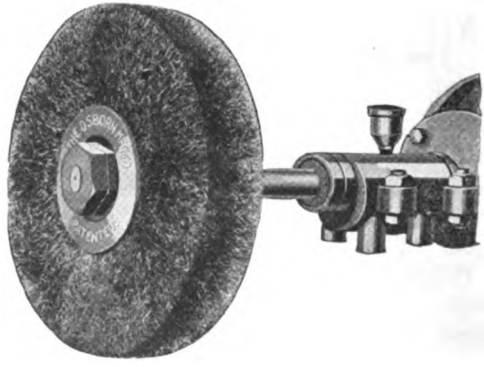

Osborne Wire Wheel Brush

brushes which have been proved by test to be the best for the specific purposes for which they were made.

Each tire manufacturer has slightly different problems because of the process employed in building his tires, or because of the kind of equipment used. However, the experience gained enables recommending certain brushes for certain purposes, and then increasingly satisfactory results may be obtained through actual tests.

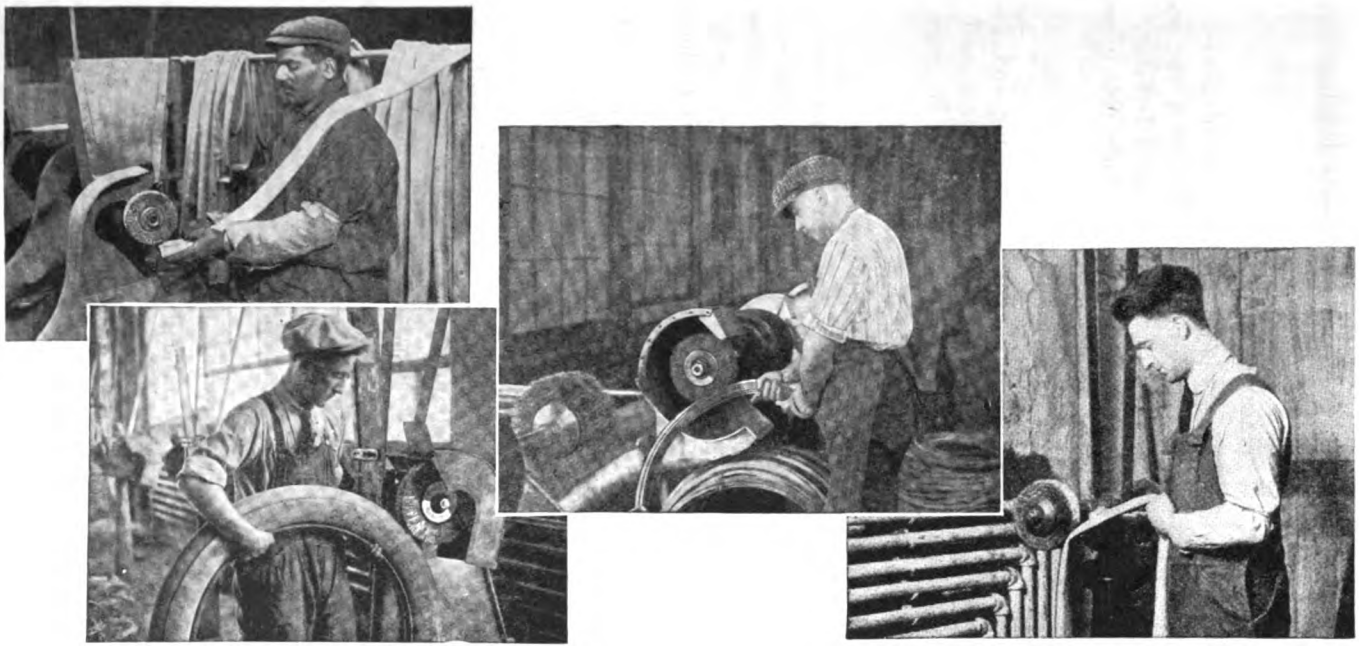

USES OF WIRE WHEEL BRUSHES

(Top left) Buffing tube ends preparatory to splicing. (Bottom Left) Cleaning the tire carcass before applying the tread. (Middle) Buffing tire beads. (Right) Preparing an inner tube for a patch.

The following information concerning different brushes for certain uses is presented as a basis of selection.

Machinery

The simplest type of machinery is the buffing jack or emery wheel stand. Some tire manufacturers have built, for their own use, special machines for certain buffing operations, such as bead buffing, tread band buffing, tire core cleaning, tire mold cleaning, tube pole cleaning, etc.

Tube Buffing

For the power buffing of inner tubes before splicing and for the buffing of valve pads, rotary wire wheels of any desired face and from 6½ to 10-inch diameter, made of No. 34 to No. 39 W. & M. gage wire in the proper quantity are recommended.

Tread Band Buffing

For tread band buffing 12-inch diameter wire sections mounted to give any width of face, made of No. 30 to No. 34 W. & M. gage wire are used. Special machines have been designed in which to drive this brush against the inner surface of the tread band while it travels automatically past the face of the brush. Another method is to have the tread band rest in a grooved block placed underneath the wheel with a foot lever provided to bring the tread band against the wheel with the proper pressure. The rotation of the wheel against the band will also permit it to travel the entire circumference at the will of the operator.

Bead Buffing

For buffing soft beads, fabric beads or straight-side beads, special wire sections 4½ to 8-inches in diameter of various widths of face and filled with No. 33 or No. 34 W. & M. gage wire are used.

Soft beads in long lengths are fed through a slotted block placed underneath the wheel, the rotation of the wheel feeding the bead through against the pull of the operator. Each of the three faces is presented in turn to the wheel by riding through the slot of the proper contour in the block.

Straight-side beads are usually buffed on a specially designed machine which rotates the bead automatically, and simultaneously cleans the three faces.

Pneumatic Carcass Roughing

The carcass of a pneumatic tire to which the tread band is to be applied is prepared by holding against it a hand wire brush filled with

either round or flat wire while the carcass is revolved on the building stand.

Tire Mold and Core Cleaning

Special machines using rotary wire brushes have been designed for the semi-automatic cleaning of tire cores and molds, both plain and non-skid design. An automatic machine for tube pole cleaning will soon be placed on the market.

Where the expense of these machines is not warranted, satisfactory results may be obtained by the use of rotary wire wheels on a portable motor. For this purpose sections of about 6-inch diameter, containing No. 32 to No. 37 W. & M. gage wire should be used. On all kinds of casing and tube repair work the wire wheels enumerated above are satisfactory.

Speeds

In tire manufacture the following speeds should be observed:

6-inch diameter	3600 R. P. M.
8-inch diameter	2700 R. P. M.
10-inch diameter	2200 R. P. M.
12-inch diameter	1800 R. P. M.

These recommended speeds are under load. Idle speeds will probably be higher, as vulcanized rubber offers considerable drag.

A good general rule to follow is:

Light work, small diameter wheels, fine wire, high speed.

Heavy work, large diameter wheels, coarse wire, low speed.

By speed is meant revolutions per minute, as the surface speed should at all times be uniform, with the general exception that coarser wire should be run a little more slowly than fine wire.

CHAPTER XX

TIRE BUILDING, Continued.

Tire Building Machines

MANY valuable and ingenious machines for building up pneumatic carcasses of frictioned fabric have been evolved. Some merely apply and roll down the fabric on the core or mandrel; others also apply the bead wires and some build up the complete tire wholly by mechanical means. A different type of tire building machines wraps a strip of friction back and forth from one edge of the core to the other, while another wraps the friction strip spirally around an annular form, the carcass thus built up being slit around its inner periphery and the bead wires and tread applied.

Vincent Tire Building Machine

In a French machine for mechanically forming the parts used in making tires, *A* is the roll of impregnated canvas for making the tire. This strip of combined rubber and fabric passes between the forming

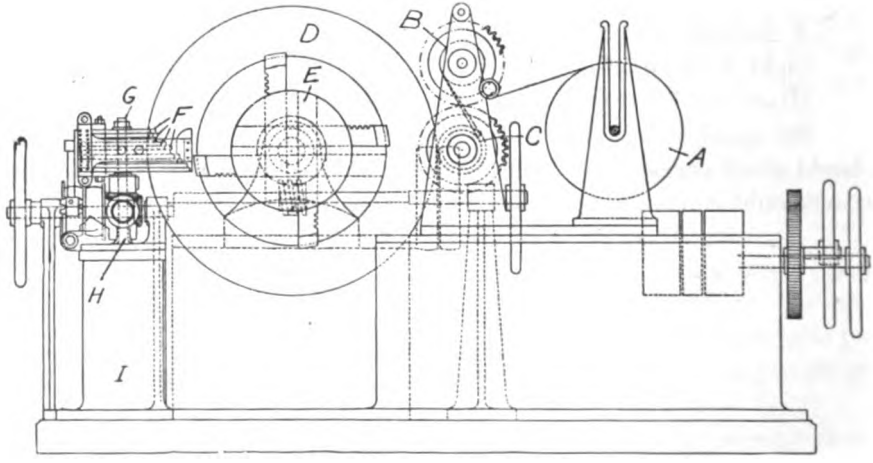

Vincent Tire Building Machine

rollers *B* and *C* which are shaped to press the strip into approximately the form of the mandrel *D*. The end of the strip is attached to the mandrel, which is supported on the adjustable chuck plate *E*. As the

mandrel is revolved the strip is shaped to it and pressed into solidity, by means of a series of small trip-hammers or mechanical strikers *F*, which operate on the superimposed sheets of gum and fabric on the mandrel. These hammers are spring-pressed and are actuated by tappet cams on the vertical shaft *G*, which is journaled in a rocking arm pivoted in supports *H* above the stand *I*. The rocking arm is adjustable in all directions, and the hammers may be made to strike rapidly repeated blows at different angles, thus causing the layers of material to adhere firmly to each other. Other tools, not shown herewith, are employed for forming the tire beads and for applying the tread.

MacIntosh Tire Casing Machine

This is a machine for building up the fabric foundation of a tire casing, and for applying the side wires for the beads. It may also be used for building up the complete tire. The drawings show a front and side elevation of the machine, and also two sectional views of the tire former drum. The frame *A* supports the main shaft *B*, upon

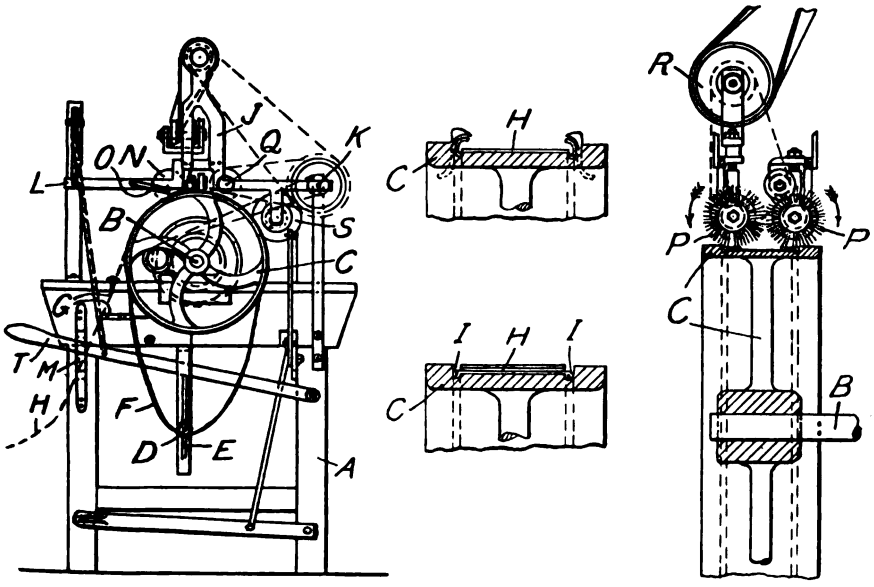

MacIntosh Tire Casing Machine

which the former drum *C* is mounted. The drum is of considerably less diameter than the tire to be made and has a groove in the outer periphery, wide enough to enable the outer edges of the canvas strip

to be turned over to form narrow seams, in the angles of which wires to form the beaded edges of the casing are embedded, a second wire being afterwards laid on the seams and body of the first layer. The periphery of the former drum, as seen in the small sectional drawings, is channel shaped in cross section, with grooves *I*, in which are placed the wires to be embedded. The lower portions of the wires are passed around a grooved roller *D* of the same width as the former drum. This roller is adjusted along the slot *E* to accommodate the diameter of the wire rings *F* used in making the bead. A table for supporting the canvas or rubber strips and suitable guiding devices *G* are employed to enable the foundation strip *H* to be placed in the groove of the drum. This rubbered strip is wider than the channel in the drum and is led under the wires so that the edges project upwardly a little beyond the wires. The strip is so placed while the machine is stationary.

Above the former drum *C* is a frame *J*, pivoted at *K*, to be raised and lowered at the free end *L* in order to bring the rollers, brushes and guides which it carries, in contact with the drum. A lever *T* is connected with a cord that passes over a pulley and engages the free end of the pivoted frame. The lever can be retained in any position in the slide *M*. Frame *J* carries a roller *N*, which fits in the channel of the former drum and rests upon the wires and presses them into the grooves. This causes the edges of the strip to rise away from the flanges in a vertical position, as the drum revolves. Close to roller *N* and carried by frame *J* are two arms *O*, which press over the edges of the strip and down on the upper surface, this operation being assisted by two revolving brushes *P* rotating transversely across the face of the former drum. In order to completely consolidate the joints and cause the edges of the strip to adhere firmly a second roller *Q* is employed. This is driven at a speed slightly higher than that of the drum, to obtain a drawing action on the strip and prevent buckling of the material of which it is composed. Both rollers *N* and *Q* are parallel to the drum, and the arms *O* and brushes *P* are all carried by the pivoted frame *J*. The various rollers, brushes, pulleys, and other working parts of the machine are driven by means of sprocket chains from the belt pulley *R*.

When the wires have been embedded in the strip, a second strip is placed on the turned over edges of the first by guiding the second strip into the machine. During this operation the pivoted frame *J* has its free end raised a little so that the rollers *N* and *Q* and brushes *P* are out of contact with the fabric. In order to cause the second strip to adhere to the first, there is mounted loosely at the rear part of the frame,

a roller *S*, which presses upon and causes the strips to adhere. When the second strip has been placed upon the casing the latter is complete and is removed from the former drum by lifting the frame *J*. The casing is then free to be removed from the drum.

State Tire Shoe Machine

With State's machine the carcass is built up entirely by mechanical means. The drawing shows a side elevation of the machine with portions in section to illustrate the internal construction. Upon the base *A* is a cylinder *B* which carries the rotary head *C* on ball-bearings *D*.

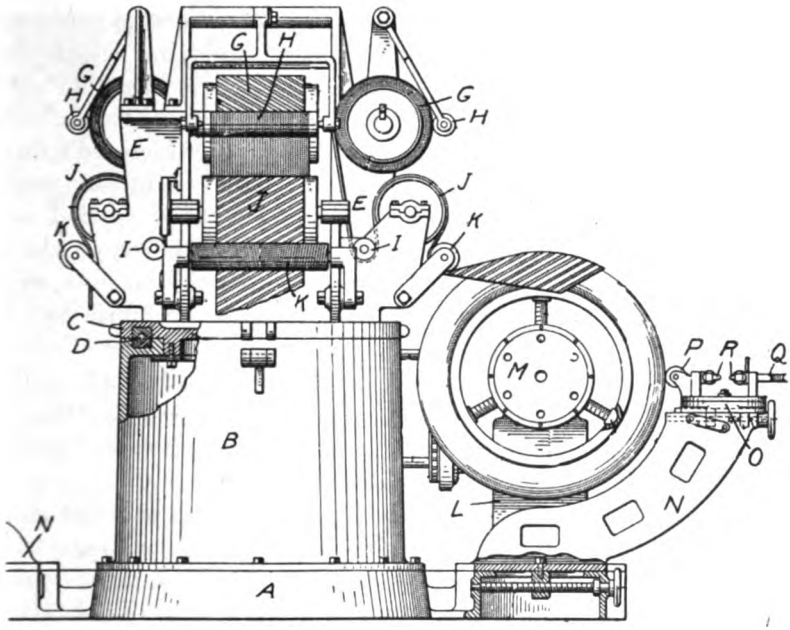

State Tire Shoe Machine

Extending from the head are four standards *E* carrying four sets of rollers. Each set comprises a stock roll of fabric *G* and a take-up roller *H*, and idle roller *I*, a rubber-covered tension roller *J* and stretching roller *K*. The tension rollers are covered with vulcanized rubber and the outer surface of the stretching rollers are provided with spiral grooves. Mounted on the base are two stands *L* in each of which is journaled a driving shaft that carries and revolves the chuck *M* which supports the core. Slidably mounted on each side of the base *A* is a frame *N*, at the top of which is a revoluble head *O*. This head forms a movable support for the tread-forming roll *P*, the cutters *Q* the bead-

attaching rolls *R* and also the spinning rolls. These tools can be alternately brought into use against the tire-core by turning the head *O*. The driving mechanism for the chuck *M* is so arranged that the core can be revolved while the fabric is applied from the stock-roll, or it can be revolved at a higher speed when the tread-forming and spinning rolls are brought into play. The machine is so constructed that two covers can be simultaneously worked, each operated by a separate mechanism but driven from the same source of power.

To operate the machine the core is coated with cement and placed upon the chuck. The end of the fabric is drawn from the stock roll around the tension and stretching rollers and pasted on the core, which is now revolved at low speed one revolution, applying one layer of fabric to the core. The core is stopped and the operator cuts off the fabric. The core is then revolved at higher speed and the tread-forming roller P is used to shape the fabric to the core, after which the spinning roller is applied. Another stock roller *G* is now brought into position by revolving the rotary head *C* and a layer of stock is applied to the core in the same manner. The rubber-coated fabric is cut on the bias and the layers are applied to the core in building up the plies so that the threads of the layers cross each other. After the fabric has been applied the cutter *Q* is brought into position and the edges of the tire are trimmed. Then the bead is added and rolled by the bead applying rollers *R*. Finally more layers of fabric are applied with their threads crossed as in the first layers until the tire carcass is completed.

Rowley Tire-Building Machine

The Rowley machine is designed for building up the tire carcass by wrapping a strip of friction back and forth from one edge of the core to the other, leaving the under side open. To the vertical frame *A* of the machine are attached three horizontal brackets *B*, *C* and *D*. The brackets *C* and *D* carry a ring which supports a spool carrier *E* of circular form. The ring and spool carrier have openings at *F*, through which the tire core or mandrel *G* is introduced. On the outer periphery of the spool carrier is a sprocket, which is engaged by the sprocket chain *H* over idler sprocket wheels *I* and driven by a sprocket *J*. If the spool carrier is to be revolved in one direction the sprocket *J* is turned by the shaft *K*. In order to give the spool carrier a reciprocating motion, a clutch on the shaft *K* is disengaged and a pinion *L* on the shaft *K* is engaged with a rack *M*. This rack is driven through a connecting rod *N* from a driving shaft *O*. This connection rod is detachable from the crank arm in order that the rack *M* may be disengaged from the pinion *L*. The tire core rests upon a pair of concave rollers *P*,

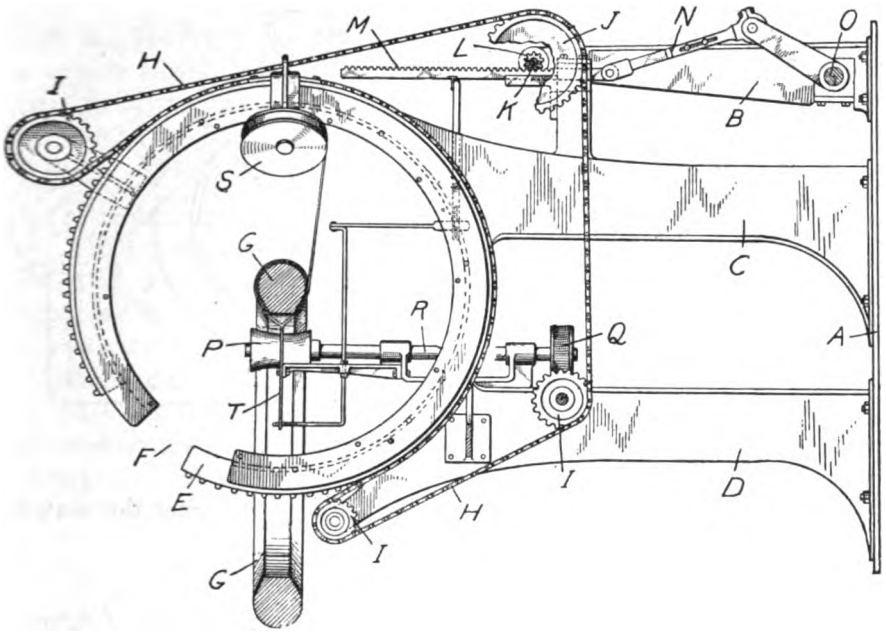

ROWLEY TIRE-BUILDING MACHINE

which are driven in either direction from a worm gear *Q* on the shaft *R*. This shaft is provided with a clutch, not shown, by means of which its direction of rotation may be reversed. The weight of the core alone keeps it in position on the rollers and causes it to revolve with them. The strip of fabric is wound on a reel *S*, which is attached to the carrier *E*, and as the carrier is reciprocated by the sprocket chain the fabric is drawn off the reel.

In starting the machine the end of the strip is attached to one edge of the tire core. When the spool carrier revolves in one direction the strip is carried around the core until it reaches the opposite edge. Here the strip is hooked over a finger of a wire fork *T*. Then when the spool carrier starts on its backward stroke the fabric is carried around the core to the opposite edge where it engages the other finger of the wire fork. During this backward and forward rocking of the spool carrier the core is slowly revolving so that the loops of fabric are given a certain overlap. This is continued until the loops are wrapped around the tread and sides of the core through its entire circumference. After a sufficient number of layers of fabric are applied the core is removed and the beads of the tire are applied. The machine may also be used for wrapping a strip of fabric completely around the tire or

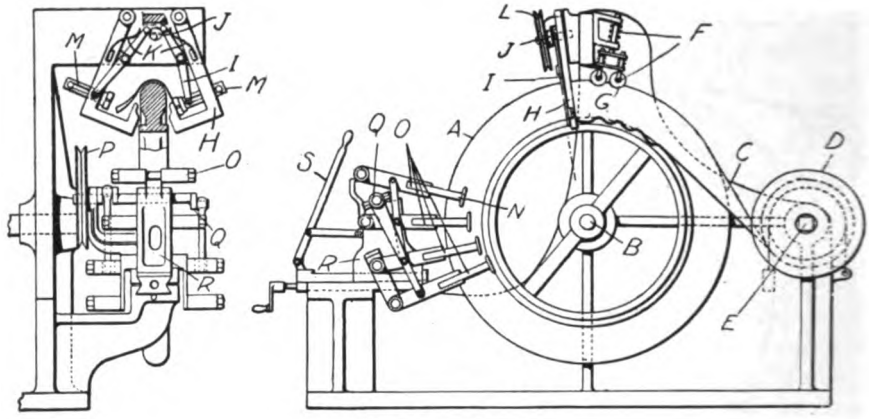

MATHERN FABRIC LAYING MACHINE

core by disengaging the reciprocating rack *M* and engaging the clutch for revolving the shaft *K* in one direction only.

MATHERN FABRIC LAYING MACHINE

Mathern's machine for mechanically applying the layers of fabric used in the construction of the tire carcass embodies a special device for reducing and smoothing out the pleats or folds that naturally occur in shaping the fabric around the core. The core *A* is attached to the driving shaft *B* of the machine, and the strip of fabric and rubber *C* is wound on the drum *D* mounted on the shaft *E*. The end of the fabric is attached to the core, which has previously been covered with cement. The machine is then started, unwinding the strip from the drum and winding it around the outer circumference of the core.

As the strip passes beneath the rolling device *F* a number of spring rollers *G* are brought into action to gradually press the fabric around the tread and sides of the core. A smoothing device now acts to compress the folds or pleats in the edges of the fabric and to further conform the fabric to the contour of the core. This device comprises two frame members *H* which carry the levers *I*. These levers are pressed against a cam *J* by springs *K*. The cam shaft is actuated by the pulley *L*. At the lower ends of the levers *I* are reciprocating blocks *M*. Between these blocks and the inner ends of the frames *H*, the canvas *C* is gripped and compressed in such a way that the folds in the edges are removed. After the fabric strip has left this smoothing device it passes under several rollers *N* on the ends of levers *O*. These levers are connected together and are operated by means of the pulley *P*

on the crank shaft Q. This gives the rollers N a slight rocking motion while the canvas is passing under them, so that the rollers pass over the entire surface of the fabric, smoothing it down and pressing the layers firmly together. A sliding carriage R, which supports the system of levers and rollers, is pulled back by the lever S to withdraw the rollers from contact with the tire when the work is completed.

Crosby Tire Building Machine

The Crosby machine is so constructed that the core may be power driven at varying speeds, thus facilitating the building up of the tire. Referring to the drawing, A shows the base of the machine frame, B the roll-carrying head, C the core over which the tire is built up, and D a pivoted arm which carries various tools for finishing the tire during the building process. The core C is fastened to the stub shaft E, mounted on a bracket F, and is actuated by a set of bevel gears (behind the core and not seen in the drawing) through the spur gears G and H.

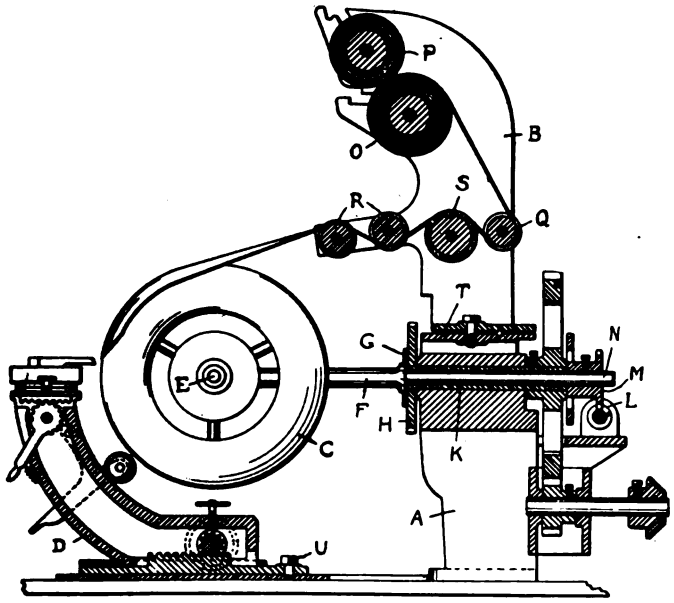

Crosby Tire Building Machine

This set of gears is mounted on the tubular shaft K which carries a change speed gear set. By means of the worm L and the gear M attached to the shaft N, the core C may be made to assume any position from the horizontal to the vertical.

The head *B* carries a roll of friction cloth, layers of which are stretched and laid on the core *C* as the first step in the construction of a tire. This friction is wound on a strip of ordinary cloth in order to separate the layers as they are rolled up and to prevent them from adhering. One of these rolls is indicated at *O*, while *P* shows a roll on which the protecting cloth is wound, as the friction cloth is unwound, and the weight of the roll *P* being sufficient to drive it as it rests against the periphery of the roll *O*. The drawing shows a strip of material passing over the stretching and guiding rollers *Q* and *R* and the brake roller *S*, and being wound on the core. As the fabric is wound on the core it is stretched lengthwise by means of this brake roller. It is absolutely essential that the fabric be laid on the core evenly and that their center lines coincide. It often occurs that the fabric is not wound evenly on the roll *O*, and as a result it will not wind truly on the core unless some means is provided to overcome the difficulty. To accomplish this result, the head *B* is mounted on a roller bearing *T* so that it will easily follow the direction of the core *C*.

As each layer of fabric is placed on the core, various rolling, compressing and stitching tools carried by the arm *D* are brought into play to form the material closely about the core. This arm is pivoted to the base at *U* so that it may be swung around to present the various working tools to the tire. This rack contains the various materials entering into the tire and these are fed to the latter in layers by means of a carrier. For this purpose the core is made to rotate in the opposite direction. After each layer of material is laid in place by the carrier the rack is swung out of position and the arm *D* with a suitable tool is swung back to work the material into a finished surface. These operations are continued until the tire is built up. In order to place the wires in the beads or rim edges, the core is turned to a horizontal position, first on one side and then on the other.

Whalen Tire Making Machine

Clincher and quick detachable tire casings are made on this machine, which winds the fabric, applies the beads and practically finishes the casing mechanically instead of by hand.

In making a tire the fabric strip is led from the supply roll and its end applied to the surface of the core. This is then rotated and spaders are applied by hand to the fabric strip, pressing it closely against the under side of the core.

In some cases the tension on the fabric strip is relied upon, while in others presser rollers are employed to press the fabric more firmly

against the core. These rollers are mounted upon a forked lever and can be adjusted as the diameter of the casing increases, so that the same pressure is exerted upon the casing at all times. The rollers are placed obliquely, and one of them is located slightly in the rear of the other, the track of which it overlaps; so that the entire upper surface of the casing is subjected to the pressure of these rollers. For regulating the tension upon the fabric strip a friction bearing box is employed, which may be set to any desired degree of tension by means of screws.

After a sufficient number of layers of the fabric (usually two) have been wound on the core, the customary beads are applied. If endless bead rings are used they are placed upon the peripheries of forms which are pressed against the partly formed casing. If a continuous bead stock is used the bead rollers are moved close up against

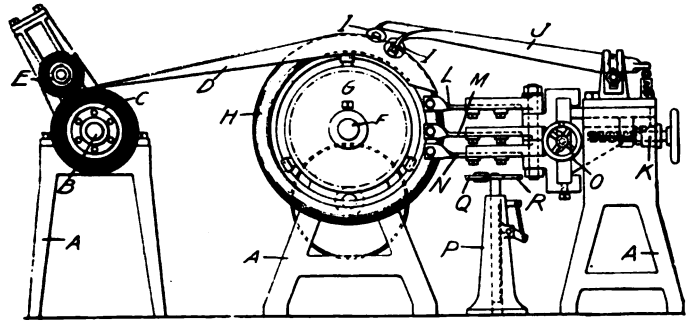

WHALEN TIRE MAKING MACHINE

A—Side Frames. **B**—Fabric Roll Shaft. **C**—Fabric Roll. **D**—Frictioned Fabric. **E**—Liner Roll. **F**—Core Shaft. **G**—Chuck. **H**—Tire Core. **I**—Presser Rollers. **J**—Presser Lever. **K**—Lever Adjustment. **L**—Bead Applying Device. **M**—Bead Forming Device. **N**—Trimming Device. **O**—Saddle Adjustment. **P**—Vertical Stands (2). **Q**—Eccentric Rollers. **R**—Roller Hand Lever.

the casing and guide the bead stock in place. When the bead is complete the stock is cut at the proper point so that the end will abut against the initial end of the bead.

After the beads have been attached, further layers of fabric are wound on the casing until sufficient thickness of fabric has been applied. To perfect the form of the casing at and around the beads, forming rollers are employed. A padding layer of rubber stock is then rolled over the layers of fabric by the pressure rollers, and a tread strip is applied. The casing is then finished and ready for curing.

EDMONDS TIRE BUILDING MACHINE

The fabric of tire casings is applied by this machine in such a way that any desired tension may be imposed upon each layer and a

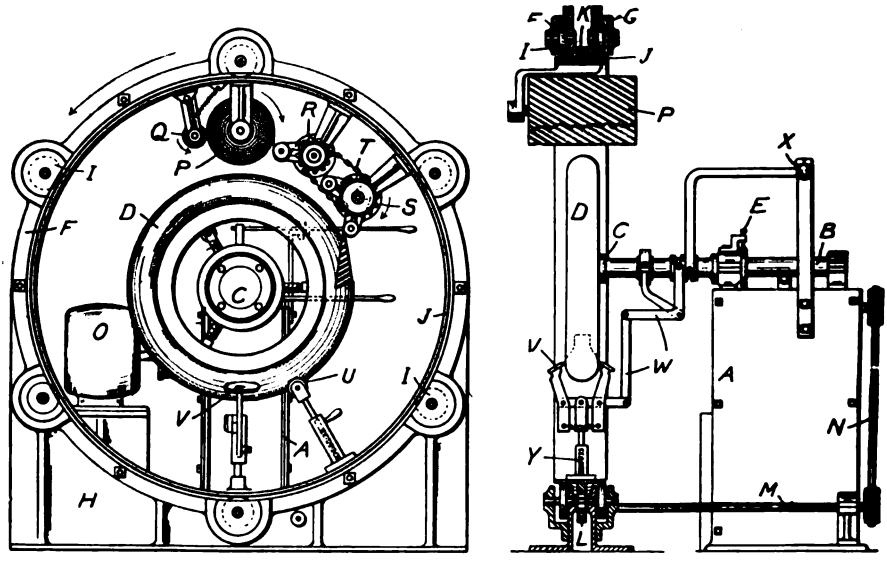

EDMONDS TIRE BUILDING MACHINE

uniform tension imposed upon all portions of each layer. Unlike most machines of this character, the mandrel upon which the tire is built up is held stationary, while the fabric applying mechanism revolves around it and carries the stock roll around the mandrel.

Mounted above the frame *A* is a shaft *B* which carries a chuck *C*. This chuck has radial arms, to the outer end of which the mandrel or core *D* is attached. The shaft *B* is mounted in its bearings and it may be held from revolving by a pin *E* projecting into a collar on the shaft. The mechanism for applying the fabric to the core comprises a pair of annular rings *F* and *G* supported by the frame *H*. These rings are provided at regular intervals with six pairs of rollers which bear upon the outer periphery of the stock carrier *J*. This carrier is in the form of a large gear having gear teeth *K*. This gear is revolved by the pinion *L* on the shaft *M*, which is driven from the electric motor *O*. This allows the stock carrier to be revolved on the rollers *I* at different speeds.

The mechanism for applying the successive layers of fabric to the core is arranged as follows: Secured to the inner face of the stock carrier *J* is a bracket which carries the roll of stock *P*. This roll of frictioned material is wound up with alternate layers of muslin for keeping the stock from sticking. As the stock is unwound from the bobbin the muslin is wound up on the roller *Q*. Also secured to

the inner face of the stock carrier *J* are bracket carrying rollers *R* and *S* as well as three small idler rollers. The rollers *R* and *S* are connected with a chain *T* passing over sprockets on the shafts of the rollers. The sprockets are of different size, so that the two rollers must turn at different speeds. When a tire is to be formed around the core, the fabric from the roll *P* is threaded around the idler rollers and then applied to the outer surface of the core. The stock carrier *J* revolves in the opposite direction indicated by the arrow, and the constant speed of the rollers *R* and *S* insures a uniform tension on the fabric. In order to remove air bubbles from underneath the fabric and to spread it evenly, a spring pressure roller *U* is employed. Also, in order to perform the operation of stitching, which is the ironing or rolling of the strip of fabric along the lateral surfaces of the core, a pair of rollers *V* are used. To control the movement of these rollers over the surface of the fabric a system of levers *W*, operated by the hand lever *X* through the sliding collars on the shaft *B*, is installed. By this means the rollers may be held outward against the pressure of the spring *Y*.

Miller Automatic Tire Machine

The principal feature of the Miller automatic tire building machine is a tension device, by means of which the tension of the fabric is regulated to a fine degree. This device operates in connection with a variable speed mechanism and acts like a governor. That is, the change in speed is compensated by a corresponding chain in the tension device, so that the stretch of the fabric remains constant and independent of the speed.

Bridge Carcass Building Machine

The Bridge carcass building machine supports the core in a horizontal position and cross-wraps the strips of fabric from two reels set at different angles to the core. Referring to the front elevation of the machine, partly in section, and to the plan view, also partly in section, the machine is mounted on bed plate *A* which supports a driving shaft *B*, upon which is a pinion *C* meshing with gear *D* on shaft *E*. To drive the tire core *F*, shaft *E* carries worm pinions *G* driving worm gear *H* on shaft *I*. These shafts carry bevel gears *J* that drive bevel pinions *K* fixed on vertical shafts *L*. The squared upper ends of shafts *L* project beyond their bearings, upon which slide the bosses *M* carrying sprocket wheels *N*. These wheels have teeth *O* pointed at the ends to pierce the strips of fabric *P* wound around the core *F*. At the same time these sprocket teeth help to drive the core. The latter has an inner ring *Q* with a series of holes *R* that engage with the teeth *O*. Each sprocket

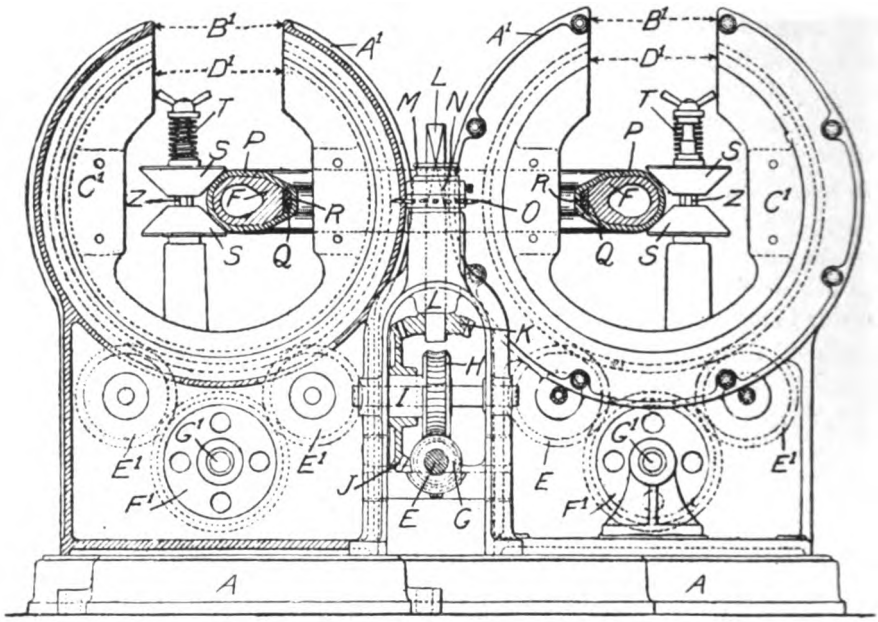

BRIDGE CARCASS BUILDING MACHINE

wheel N is so attached to the vertically sliding boss M that the wheel can rise on its shaft L while turning with it, as the thickness of the winding increases. The wheels N with their teeth can be moved away from the core and out of action.

The core is supported between two pairs of conical rollers S made in two halves with a V-groove between them. The upper rollers are pressed toward the core by a spring T, adjustable in order to resist the thickening of the winding and to hold the core. These conical rollers drive the core by friction, acting as auxiliary drivers to the sprocket wheels N. The shafts which carry the rollers S are driven from the shaft E by bevel gears U, which mesh with gears V on shafts W. On the opposite ends of the shafts are bevel pinions X, which mesh with gears keyed to the lower ends of shafts Z, upon which the conical rollers S are mounted. By this means the core is driven by friction while the positive drive is through the sprocket wheels N. The friction drive is also available while the tire cover is being cut circumferentially on its inner surface, when the sprocket wheels are necessarily out of action.

Supporting rings A^1 are rigidly secured to the machine frame, each having a gap B^1 to allow the core to be placed in position. Each

ring supports within it a rotable ring C^1, also provided with a gap D^1. Each ring C^1 carries external spur teeth driven by spur gears E^1. These gears are driven by center wheels F^1 keyed on shafts G^1, which are driven by bevel gears H^1 from shafts I^1, the latter deriving their motion from the main shaft through bevels J^1. The bevels on shafts I^1 are controlled by clutches K^1 operated by levers L^1 so that the rings C^1 may be started and stopped as desired. These rotable rings carry brackets M^1 supporting the reels N^1 which carry the strips of fabric to be wound around the core. The rings C^1 and reels N^1 are placed so that the two strips crossed are wound around the core at different angles and so that the strips are crossed when winding several layers to build up the required thickness of the casing. Reels are provided with brake bands in order to give the required tension to the fabric.

In operating the machine the ends of the strips are secured to the core after it has been placed in position on the roller S. The core is

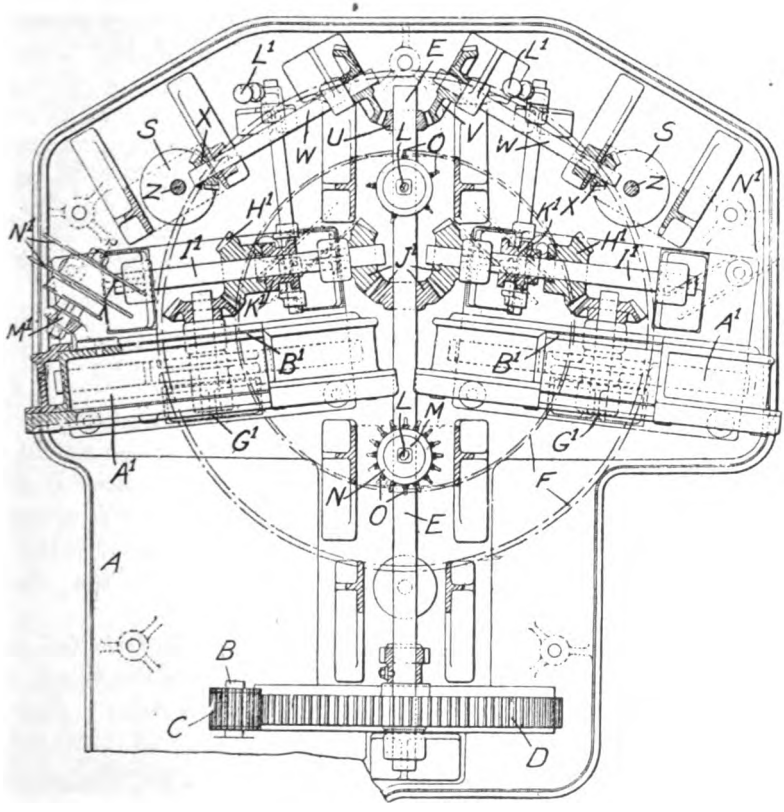

PLAN VIEW OF THE BRIDGE MACHINE

rotated and the gear rings revolved at a speed with strict relation to that of the core, carrying the reels around the core and causing the fabric strips to be wound at the right tension. When a sufficient thickness of casing has been formed, it is severed at the inner periphery by circular cutters, and the severed edges turned back to form the bead and to enable the casing to be removed from the core.

Doughty Combined Calender and Building Machine

In Doughty's process of tire building the friction calender and core wrapping machine operate in conjunction. A band of fabric the exact width of the tire carcass and woven on a special loom so that it is loose in the middle, tight at the sides and on a slight curve, is frictioned on a calender that has concave and convex rollers. Two views of the

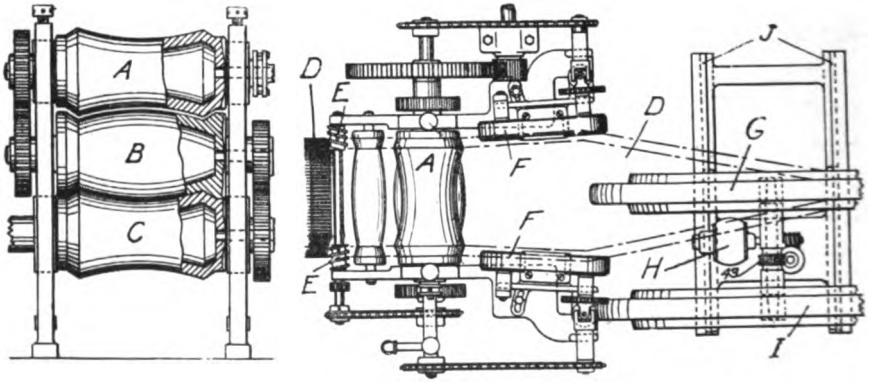

Doughty Combined Calender and Building Machine

calender are shown by the illustration, that on the left being a front elevation, and that on the right a plan view showing the machine in connection with the tire core, on which the frictioned strip is wound as it leaves the rolls. The middle roll is convex while the upper and lower rolls are concave, the contour being such that it shapes the strip passing through. The middle roll is driven faster than the others to friction the rubber into the fabric.

Referring to the right-hand drawing, the fabric *D* is fed to the calender by worm-shaped stretching rollers *E*, and then passes between rolls *B* and *C*, where the rubber, being fed between rolls *A* and *B*, is frictioned into it. On leaving the calender the edges of the fabric are gripped between two pairs of spiked belts *F*, set at diverging angles to stretch the weft threads of the strip. It is then wrapped, while still

warm, on the collapsible tire core *G*, driven by the motor *H*, strips for the beads being applied meanwhile. There are two of these cores, *G* and *I*, mounted on a frame which slides on rails *J*. When the desired thickness is built up, the strip is severed and the other core is brought in line with the calender. The covered core is then removed and another placed to receive the strip. As the covered cores are removed from the front of the calender they are placed on other frames for applying the treads, after which the tires are molded and vulcanized in a special hydraulic press.

Converse-Kress Tire Building Machine

The salient parts of this machine are a tire core and jack, a stretcher drum, a former for shaping the frictioned fabric to the core, and a pair of adjustable bead rollers, all mounted on a frame.

Referring to the drawing, the bias frictioned fabric *A* is passed from the stock reel *B* around the stretcher drum *C*. The muslin wrapper *D* passes from the stock reel under a guide roller *E* but is again brought against the frictioned strip and passes part way around the drum with it, forming a brake to prevent it from being unwound too fast. The wrapper then goes over a swinging frame *F* and is wound

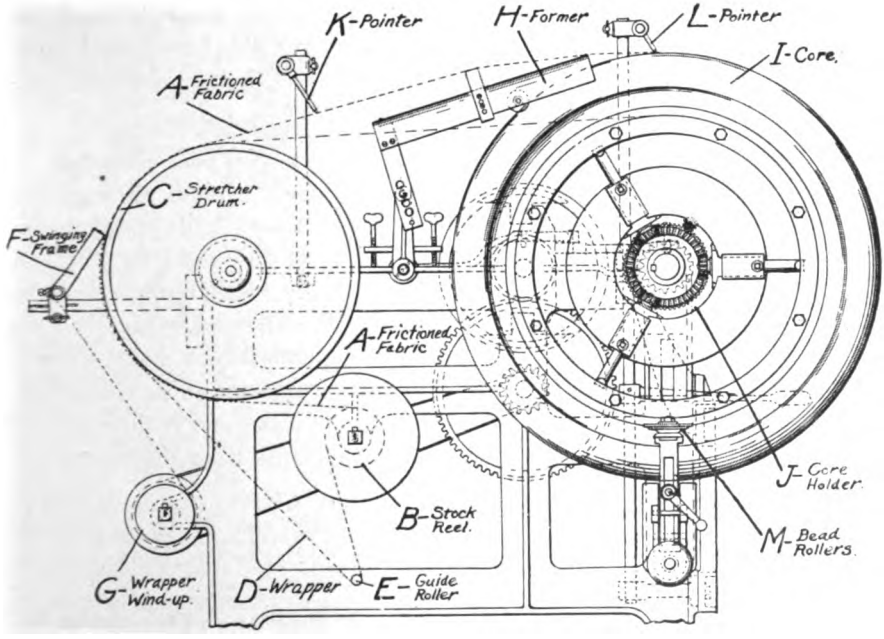

Converse-Kress Tire Building Machine

up on a reel *G*. From the drum the fabric passes over a former *H* and is attached to the tire core *I*. The core, mounted on the holder *J*, is geared to travel 15 per cent. faster than the drum, to give the fabric a uniform stretch. The former *H* is shaped like an inverted U and has curved edges which turn up the edges of the strip to shape them for taking the beads. Above the frame are two pointers *K* and *L*, under which the center line of the strip passes, serving as a guide to keep the winding in line. A center line for this purpose may be marked on the strip as it is wound on the stock reel, so that the line will come on the upper surface of the fabric as it is unwound in the process of building up the tire.

After the required number of plies are laid on the core the beads are applied and rolled into place by the adjustable, concave, horizontal rollers *M*.

Dew Tire Building Machine

This is a machine for building up a tire carcass composed of frictioned fabric in the form of strips or ribbons wound around a mandrel or core at an angle thereto so that the strips may be crossed first in one direction and then in the other to the thickness of casing required. Briefly described, it comprises means for supporting and positively driving the core; for holding and winding the fabric strips around the core, and for cutting the casing so that it can be doubled or opened up to make the beaded edges of the tire casing where such are necessary.

Thropp-Delaski Tire Making Machine

The illustration is a front view showing a tire core mounted on a spider revolved by a driving shaft. This shaft extends through the housing, has reverse gearing and is connected to a variable speed device so that the core is driven at various speeds to the right or left. A cylindrical head slides in a cylinder bolted to the overhanging stanchion and supports a roll of fabric in a frame. It is moved vertically by a screw, bevel gearing and an inclined shaft operated by a hand wheel.

The fabric, cut in bias lengths, is passed under a guide roller over the wooden friction roller, under another guide roller and is then pressed firmly on the periphery of the core. At the same time the interposed wrapper is wound on a take-up roller.

Mounted on a sliding carriage are two plates that swing in opposite directions in a curve equal to the periphery of the core. These support the two motor driven forming disks.

The various layers of fabric are laid on the core and then stretched and formed down by these disks. The bead rings are placed on the

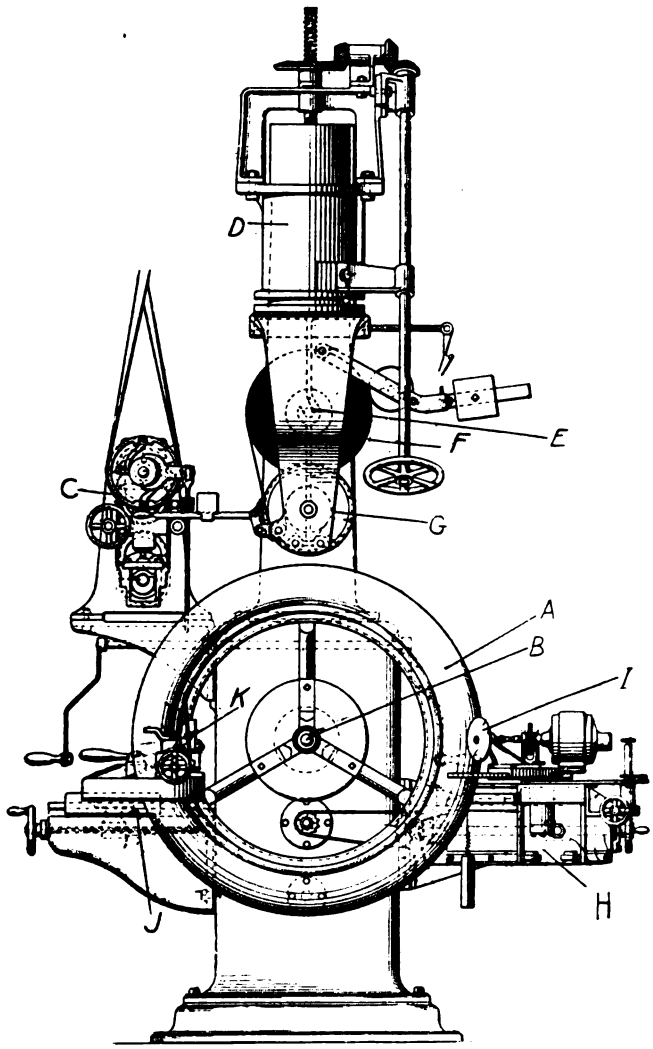

THROPP-DELASKI TIRE MAKING MACHINE

A—Core. **B**—Driving Shaft. **C**—Variable Speed Device. **D**—Cylindrical Head. **E**—Fabric Frame. **F**—Fabric. **G**—Friction Roller. **H**—Sliding Carriage. **I**—Forming Discs. **J**—Sliding Plate. **K**—Trimming Knives.

core and the beads pressed in position, after which the rings are removed and the fabric stitched down.

A sliding plate on the left of the core supports a hook-shaped swinging arm carrying two trimming knives which trim the edges of the fabric. The tire and core are then removed from the machine and placed in a mold or wrapped for vulcanization.

In a subsequent patent this machine was further developed to increase its speed. In the second illustration, frame *A* supports the revolving tire core *B* upon which the fabric strips are applied. Frame *D* is attached to the cylinder *C* that is adjusted vertically by screw and bevel gearing. Two stock rolls *E, E,* that are journaled in this frame, carry the friction fabric of different widths used in constructing the casing. The wooden rollers *F,* guide the fabric to the revolving core,

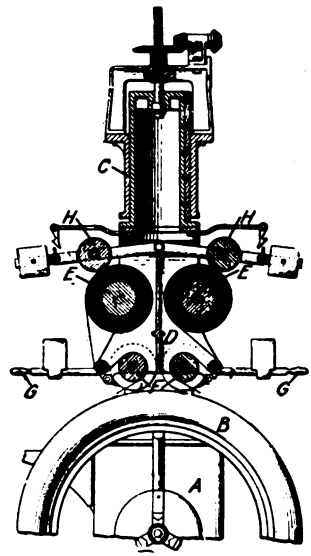

THROPP-DELASKI IMPROVEMENTS

and the tension is applied by weight levers *G, G.* The liner strips are wound up on the weighted rollers *H, H,* which are driven by contact with the stock rolls.

In operation the plies of narrow fabric are first laid on the core and then the beads are applied, after which the wider fabric is laid on while the core is revolved in the reverse direction. Thus the threads of the fabric plies under the beads are laid at the same angles and those of the superposed plies are laid the same, but at a different angle to the plies under the beads.

STEVENS TIRE CASING MACHINE

Plies of frictioned fabric are wound under uniform tension on a rotating mandrel, means being provided for rolling down the sides of the shaped fabric layers without the formation of creases.

Referring to the drawing, the fabric is unwound from the drum *171*, the liner being taken up on the roller *170*. The strip is then led under the guide roller *156* and around the tension roller *155* to the mandrel 28. This is rotated and drives the friction roller *157* on the shaft *152* geared to the shaft *153*, carrying the roller *155* which is arranged to exert a dragging or tensioning action of the fabric. The frame *148*, carrying the tensioning devices, rocks on a shaft *147*, under the control of springs *151*, bearing on horizontal arms *149* of the frame. After each layer is applied, the core is rotated at a greater speed and the devices for rolling down the sides of the fabric are advanced towards the core. The rolling disks *132*, are advanced towards the core by the carriage *63*, and are forced against the sides of the casing by a weight suspended on a cable, the ends of which are attached to

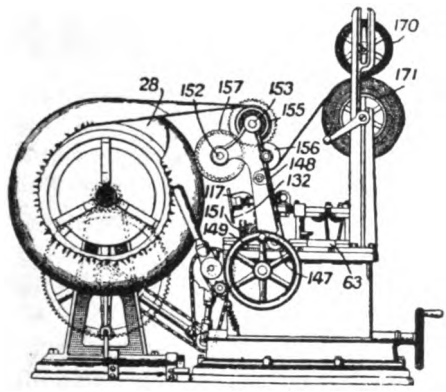

STEVENS TIRE CASING MACHINE

pivoted arms carrying the roller supports *117*. The rollers act obliquely and their inclination is adjustable to facilitate working on the beads. A lever is provided for swinging the arms *117*, clear of the core against the action of the weight, which lever may also be used to relieve or increase the pressure of the rollers on the core. For trimming the edges of the finished foundation, a pair of cutters is fitted in adjustable holders on slides near the edges of the carriage *63*.

LISTER TIRE BUILDING MACHINE.

Four or more collapsible cores are carried by a revoluble frame that presents each core to different reels of frictioned fabric, so that while the inner fabric plies are laid on one core, the outer plies are laid on another, thus a plurality of cases are progressively constructed.

A later patent relating to the same machine provides improvements in supporting and driving the cores and compressing rollers, also means for shaping the material to each core.

Paridon Tire Building Machine.

Paridon's invention possesses certain unusual features that are radical departures from the customary design of tire building machines.

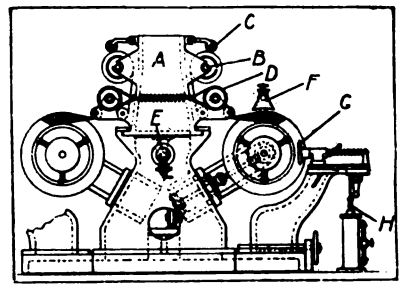

Paridon Tire Builder

The drawing is an end elevation of the machine, which is duplex in construction. The description applies to both units, but will be confined to the one on the right. There are four frames, only one being shown at *A*, which supports two sets of fabric rollers *B*, liner rollers *C*, and tension rollers *D*. The frames are moved longitudinally to bring the fabric rollers alternately in line with the core by a reciprocating hydraulic piston *E*, operated by a four-way valve. As the fabric strip is applied to the core, adhesion of the successive plies is assisted by a jet of air from the nozzle *F*. The two smoothing rollers *G* are operated by rack and pinion movement controlled by the vertical hydraulic piston *H*. The front faces of the smoothing rollers are recessed with convolute openings through which air is forced, materially aiding the stitching operations and preventing air bubbles between the fabric plies.

Kremer Fabric Shaping Tire Building Machine.

The principal object of this invention is to provide a tire shoe making machine that will shape or stretch longitudinal, median portions of the fabric without stretching the edges in a corresponding manner. The following briefly describes the operation of the machine shown opposite in side elevation.

The rolls of frictioned fabric are placed upon the four fabric holders *A* and the strips drawn off by feeding them over the liner reels *B* in such a manner that the liners are rolled up on the reels.

From the fabric holders, the frictioned fabric passes to a tension mechanism *C* which serves to place it under suitable tension or stretching action. The rubberized fabric then passes over shaping rollers *D* that stretch the longitudinal median portions of the fabric, without correspondingly stretching the edges.

The shaping or stretching rollers are yieldingly mounted in any suitable manner, and a registering dial *E* indicates or registers the tension under which the fabric is placed by the stretching devices.

The fabric then passes to the rotary core *F*, upon which the carcass is built up. The reference letter *G* indicates the tread forming and spinning mechanism by means of which the tread is formed and the sheets of fabric are stretched into position, and *H* indicates the bead setting mechanism.

The machine is provided with a change-speed mechanism, and is driven by an electric motor shown at *I*.

Kremer Fabric Tensioning Tire Building Machine

The object of this invention is to obtain a uniform tension upon the successive plies of fabric when they are applied to the core. In the right-hand side elevation, pedestal *A* supports a high and low speed belt-driven gearing *B* that actuates the core driving shaft, which passes through a sleeve journaled in bearing *C*. This sleeve terminates in a long and a short arm, on which the core chuck *D*, bead applying levers *E*, *E*, and core-driving gears *F* are mounted and revolved with the

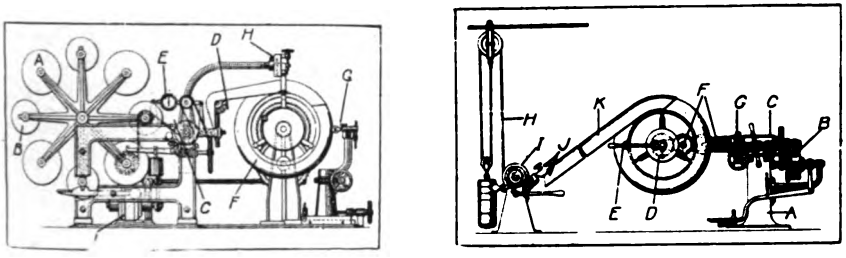

Kremer Fabric Shaping and Fabric Tensioning Machines

sleeve by means of the hand wheel operated worm gearing *G*. The tension is obtained by a weighted cable *H* that passes around the sheave *I*, provided with a braking device, and attached to the clamp *J*, in which one end of the fabric is gripped, while the other is applied to the core.

The core is then rotated and one ply of fabric is applied, when the machine is stopped and the strip cut off at the correct length. This

operation is repeated until the requisite number of layers have been applied, when the structure is smoothed down. The core is then placed in a horizontal position and rotated. The bead is then centered and applied to the casing by one of the bead levers. Finally the core is reversed, bringing the opposite side of the casing uppermost, and the remaining bead is applied in the same manner as the first by the other bead lever.

Avon Tire Building Machine

The illustration shows a side elevation and sectional plan view. The fabric strips are shaped to the core by a plurality of rollers, mounted on two disks, shown at *A* in the plan view, which are mechanically driven in a direction opposite to that of the revolving core. The disks are pressed towards the core by two springs arranged on the disk shaft *B*, but may be retracted by a hand-operated cam *C*.

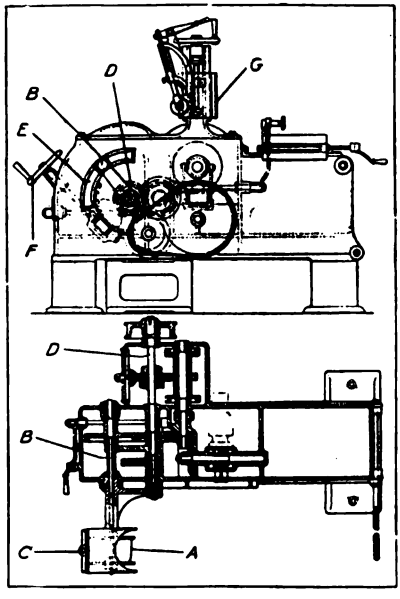

Avon Tire Builder

The disk shaft *B* is geared to the main shaft *D* and is carried in two bearings which are adjusted in the slot *E*, in relation to the tire core, by the quadrant worm gearing and hand wheel *F*. The tread is applied to the casing by the spring-operated profiled rollers carried by a vertically adjusted slide.

Kremer Tire Building and Stitching Device

This device provides means for spinning down one side of the tire in a direction lengthwise of the warp threads, and when the core is reversed and rotated in the opposite direction for spinning down the other side of the tire in a similar manner.

The machine comprises a suitable base *A*, on which is mounted the spinning mechanism *B*, the rotary core *C*, the mechanism *D*, for reversing the rotation of the core and for swinging it around on its

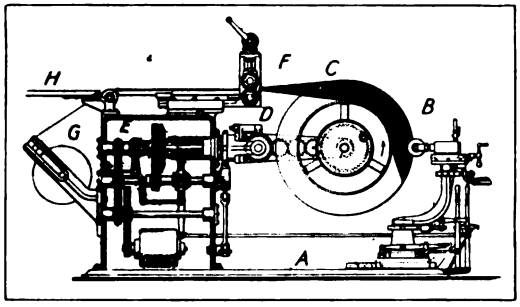

Kremer Building and Stitching Device

axis of rotation, the mechanism *E*, for driving the core forward at fast and slow speeds, the tension mechanism *F*, for feeding the fabric under the proper tension, the reel *G*, from which the fabric is fed and the table *H*, on which the fabric is made up when the reel is not used.

After the fabric has been fed to the core and is ready to be spun down, the core is rotated forward at fast speed and the spinner held against that side of the fabric in which the warp threads extend diagonally and rearward relative to the direction of the core. When one side of the fabric has been spun down, the core is stopped and the core-holding arm rotated, bringing the opposite side of the core into position to be engaged by the spinner. The rotation of the core is then reversed and the remaining side of the fabric is spun down in the proper way, to preserve or produce the necessary tension on the warp threads.

Fisher-Price Tire Building Machine

This invention obviates the necessity of revolving the tire core at high speed, while applying several plies of fabric. The mode of operation is as follows: The end of the web of fabric *A* is pressed upon the ring core, and the support *B* is then moved up until the

disks *C* bear upon the fabric web at or near its point of contact with the ring core. This is then rotated at a speed of about ten revolutions per minute, more or less, and during each single revolution draws a round of the fabric from the fabric supply onto its periphery. The disks operate during rotation of the core to press down or stitch the fabric into intimate contact with the surface of the core substantially at the moment the fabric arrives at the core from the fabric supply. The disks are arranged to overlap each other so that the portion of

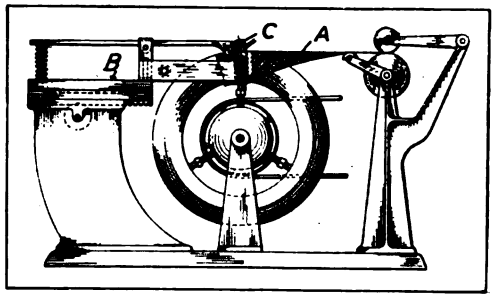

FISHER-PRICE BUILDING MACHINE

fabric operated upon by one disk will be overlapped by the portion operated upon by the next adjacent disk, and thus all points on the fabric will be stitched down and shaped intimately to the configuration of the core. The above-described operation is continued until a sufficient number of superposed plies or layers of fabric have been laid upon the core to build the carcass to its desired dimensions.

KNIGHT TIRE BUILDING MACHINE

Filler threads of tire building fabric are stronger than the warp threads. Therefore, a better tire is made by reversing the warp and filler threads in building up the carcass of a pneumatic tire. In cord tire construction the same reason exists for reversing the threads of cord fabric. For this purpose the present machine is provided with two independent fabric feeding tables and mechanisms, and is operated in the following manner:

The first fabric strip is threaded through the feed mechanism, the pressure adjusted by a hand wheel, and the fabric end drawn down by hand until the cone roller rests on the core to which the fabric is attached. When the machine is started the cone roller revolves the feed mechanism at a speed 14 per cent. slower than the core speed, thereby providing uniform tension.

As the core revolves, another ply is attached to the first ply on the table, and when the end of the first ply reaches the core the machine is stopped and the second ply separated from the first and thrown back over the pressure bar. When the two ends of the first ply are joined together on the core, the latter is revolved at an increased speed and the first ply stitched down. The core is then removed to the second feeding mechanism and the process repeated in applying the second ply. In making a small tire that does not require more than four plies of fabric, the bead setting arm is swung against the tire and the bead set in proper place by one revolution of the core. This is again shifted to the first position, the opposite bead set in place and the end of the fabric taken from the pressure bar and drawn

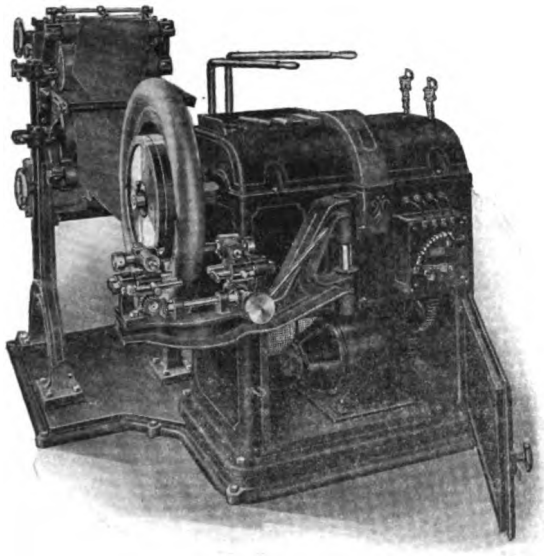

HERMANN SPECIAL TIRE BUILDING MACHINE

down until the cone roll rests on the core and the core revolved to apply the third ply. After this is stitched down, the core is again shifted to receive the fourth ply, which completes the process for a small tire.

HERMANN TIRE BUILDING MACHINES

By means of a novel centering device, all fabric leading from the rolls is not only automatically centered on the core, but marked and guided into position without aid or assistance from the operator. This,

together with improved tension rolls, gives perfect control and diminishes edge trim to a minimum.

This machine is manufactured in two models, the Special being designed and constructed for making Ford sizes only, while the two unit or Universal will build any size and style up to and including five-inch. Due to the convenient arrangement of the tension rolls, two widths of fabric are always in position to the core on either machine, thus it will be seen that no movement is necessary on the Special, while on the Universal two automatic movements, in which

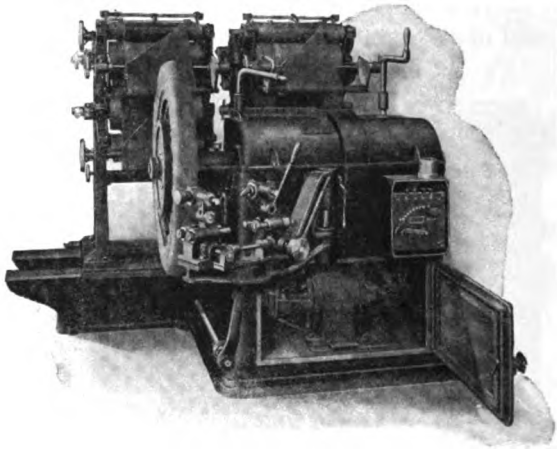

HERMANN UNIVERSAL TIRE BUILDER

no time is lost to the operator or builder, supply the necessary widths of fabric with which to construct the larger sized tires.

MATHERN IMPROVED TIRE MAKING MACHINE

This European machine possesses many admirable features to recommend it, particularly to the smaller tire manufacturers.

A salient feature is the automatic building of the carcass from a continuous fabric strip, and without stopping the machine, thereby insuring regularity of stretch. The strips of frictioned fabric are delivered to the core from the fabric roller located in front of the tension drum and the liner is wound up on the roller beneath. The plies are rolled down by a series of stitcher rollers mounted on levers contained in a roll box, which, when adjusted to the core, automatically completes the rolling down operation. Positive tension is obtained by a small convex drum, positioned between the fabric roller and the

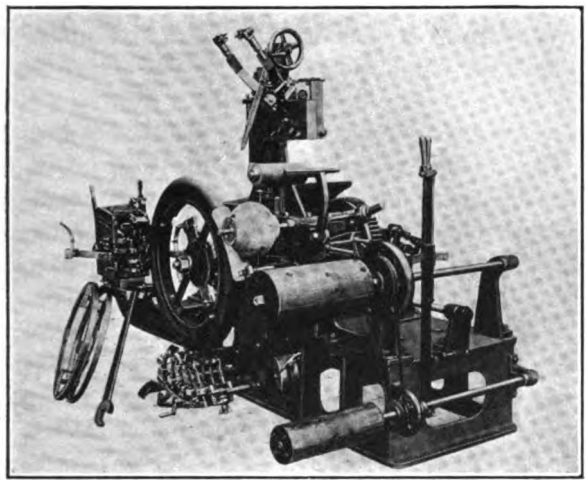

MATHERN IMPROVED TIRE MAKING MACHINE

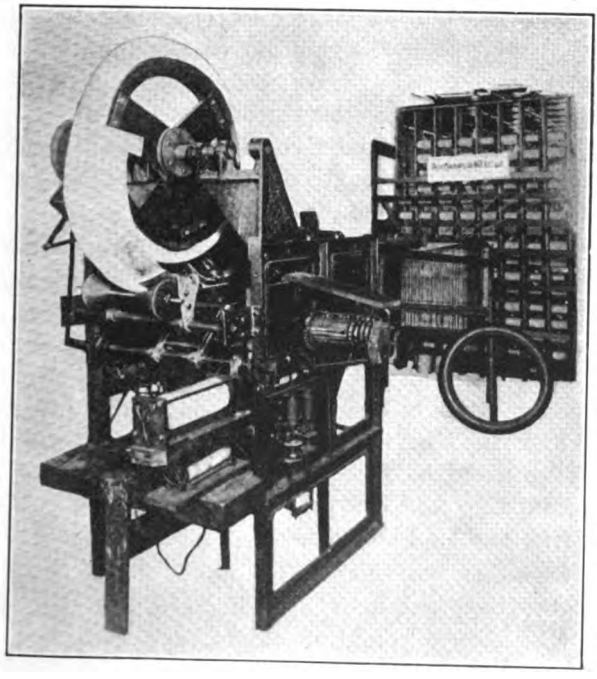

SCHAFFER TIRE BUILDER AND LOOM

core, and correctly proportioned to the size of tire under construction. Located between this drum and the core is the bridge for guiding the fabric.

There are two bead rings; one is placed behind the core and the other in front, being provided with pins and hooks which insure centering of the beads. The bead rollers are mounted on a pivoted hinge that brings them in position over the core when required and removes them when the bead setting is accomplished. When all the plies are laid under and over the beads the canvas edges are accurately trimmed by a special cutting device.

All sizes of tires from 2½ to 5 inches can be built on this machine by changing a few accessories, and 80 tires per day of 10 hours may be produced by an operator of ordinary skill.

Schaffer Tire Building Machine and Loom

This machine makes it possible to begin the construction of a tire carcass on the doubling and twisting machine, where each thread, before becoming a part of a cord, is drawn through rubber solution and impregnated, insuring a thorough distribution of rubber throughout the fabric, thus contributing largely to the elimination of one of the troubles that usually cause separation of the plies, internal friction and blow-outs.

After being rubberized, the threads are ingeniously woven on a magnetically operated loom and formed into a fabric on a double curve to approximate closely the final position of the fabric in the tire, as regards curve of the walls and circumference of the tire.

The saturated threads are then passed over electrically warmed pads that make them soft and sticky when the skim coat rubber is fed between the rolls and adheres to the warmed rubber of the plies, welding them closely together and insuring the expulsion of air.

The carcass made by this machine is unique in that it does away with all laps or joints. There is one continuous ply from start to finish, in which the distribution of warp threads may be regulated to give varying strengths for first ply, bead section, etc. The fabric contains one starting and one finishing end, with no waste of fabric, there is no trimming, and but little auxiliary stitching.

These machines will make tires up to 34 by 4 inches, with a capacity of two tires per hour, it being assumed that one man will be able to take care of eight machines, and thus turn out sixteen tires per hour. After the tire is built up the form is separated and the tire removed and vulcanized in the usual manner.

Banner Machine for Building Casings and Tubes

This machine is provided with a rotatable annular channel-shaped form within which the tire casing or tube is built. Two annular portions secured together and arranged to be separated after the tire is built permit the removal of the tire from the form. A stitching device stretches the material from which the casings are formed, as it is placed within the form, and shapes the tire casing, as it is being built up.

The tread portion and side walls of the casing are first placed within the form, after which the breaker strip is placed upon the thread, or if desired the breaker strip may be applied to the tread

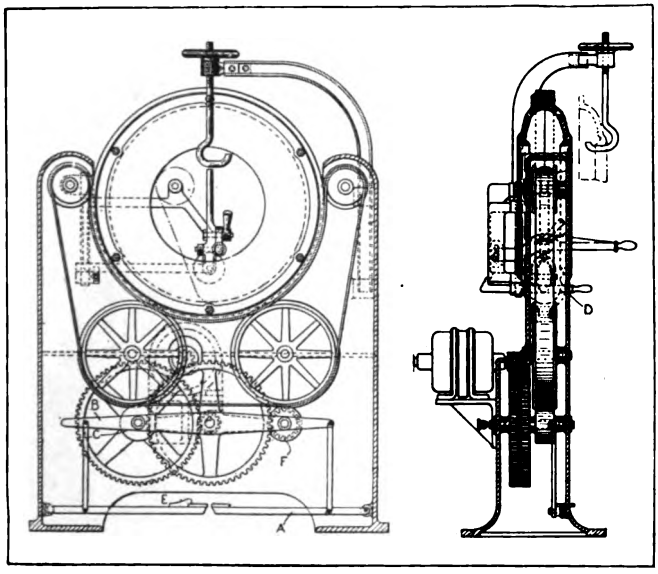

Banner Tire and Tube Builder

before placing in the form. The form is preferably operated at a slow speed by depressing the treadle *A*, rocking the lever *B* into position to move friction roller C into engagement with the belt, and thus slowly rotating the form.

The fabric or cord is then placed within the form, and the stitching wheel *D* operated to press the fabric within the side walls and tread portion of the tire. The cushion strip being placed in the form, the inner plies of cord or fabric are then stitched upon the inner surface of the tire.

If it is desired to operate the form at a comparatively fast rate of speed the treadle *E* is depressed, moving the friction roller *C* out of engagement with the belt and throwing the friction roller *F* into engagement with the belt.

These inner cords or fabric may be composed of any desired number of layers according to the size or type of tire to be built. The beads are then placed in their proper position and the remainder of the cord or fabric plies placed over the beads and stitched in place by the stitching wheel.

Banner Improved Tire Building Machine

The improved tire building machine here shown consists of two parts, a winding and stitching unit and a tension unit, both being doweled and bolted together forming a complete machine. It is used

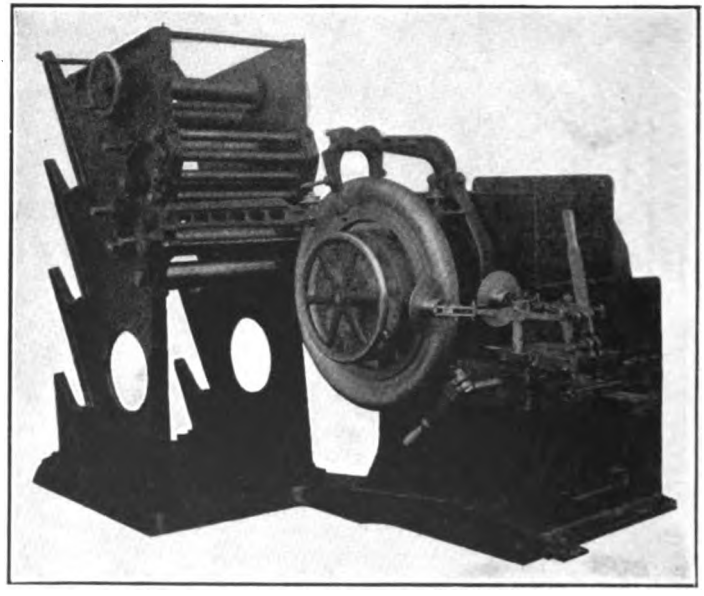

Banner Improved Tire Builder

for the manufacture of fabric tires and for smaller sizes of cord tires. The capacity of the machine is 50 to 120 carcasses in a 10-hour day with one operator.

In operation, the roll of frictioned fabric is placed in the machine and the loose end threaded over the tension rollers and applied to

the core. When this revolves it pulls the fabric over the tension rollers and lays it on the core. The speed of the core is controlled by gearing on the tension rollers so that the fabric cannot be applied to the core faster than the predetermined stretch in proportion to the gears and the tension rollers. Thus, the fabric will be stretched uni-

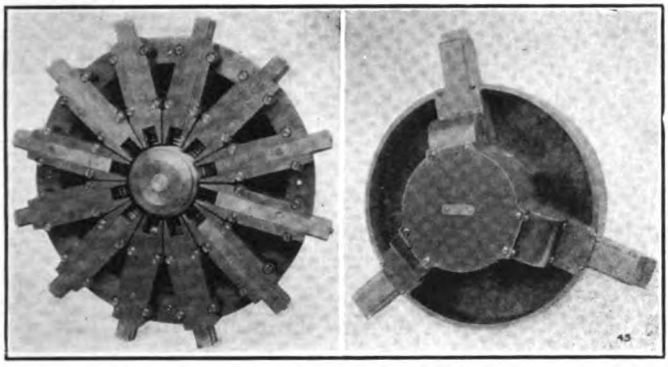

TWELVE AND THREE-JAW AMERICAN PNEUMATIC CHUCKS

formly on all cores, regardless of width or variation of any kind, and can be measured to exact length and uniformly stretched, bringing the ends together.

When the machine has completed one revolution the fabric is cut off, the splice made, and the ply stitched down on the core. The next ply is put on in the same manner and when the proper number have been applied to the core, the bead is placed, and the remaining plies are added and stitched down separately. The tire is then trimmed and the carcass is finished.

This machine is unique in that as soon as the fabric is cut off, all sides of the core are available for inspection or removal, and no part of the machine overhangs it, or interferes at the sides with the handling or manipulation of the core.

AMERICAN PNEUMATIC CHUCKS FOR TIRE BUILDING MACHINES

Air operated chucks have come into use for holding the bases of solid tires and the cores of pneumatic tires during the building operations.

The 12-jaw chuck shown on the left in the illustration is a special chuck designed for use in connection with a solid rubber tire trimming machine. It will take tires from 28 to 26 inches in diameter, each of the jaws having a movement of over four inches. Owing to

the narrow width of the small tires, it is necessary to make the chuck only 3½ inches wide on the outside diameter. The chuck has 12 jaws, which are necessary to avoid springing the tire ring out of shape, which is the main difficulty with a four-jawed chuck. All working parts are fully enclosed, making them dust-proof and eliminating danger to the workman.

The movement of the jaws is obtained through a rack-and-pinion movement that is operated by a 12-inch standard double-acting air cylinder. This chuck can also be made for external gripping by using false jaws.

The three-jaw chuck shown in the illustration on the right is used on pneumatic tire making machines and the interior construction is similar to that of the twelve-jaw chuck. It has a range from 17 to 14 inches, to accommodate regular-sized cores. These chucks are operated by a standard 10-inch double acting air cylinder. The three-jaw chuck can also be used on tire building stands, there being four chucks to each stand.

CHAPTER XXI

CLOTH WRAPPING MACHINES

IN the manufacture of pneumatic tires by what has come to be known as the "open cure" process, the fabric carcass is built up on an annular core and semi-cured in a mold, after which the rubber tread is applied and one or more layers of cloth are wrapped spirally around both tire and core in order to retain the tire in shape while undergoing the final cure, yet permit the steam to penetrate through the porous fabric to the unvulcanized rubber. At first this wrapping was done by hand, but the time required and the difficulty of obtaining tight wrapping and uniform tension throughout led to the development of many machines for the purpose. Some of them also unwrap the vulcanized tires and rewind and prepare the fabric strips for further use, and some utilize the same supporting spider for the core throughout the various steps of the tire building process.

Decauville Cloth Wrapping Machine

In this French type of rag wrapping machine the tire to be wrapped is inserted through a gap in the circular shuttle frame and rests on two concave rollers. These are journaled in a frame that slides in a vertical bearing in the base column. A weighted lever, depressed by a pedal, holds the tire against the upper concave guide rollers. An endless belt rotates the tire by frictional contact. This belt is driven by a bevel gear on the counter shaft at the top of the machine. This gear meshes with another bevel gear keyed to an upright shaft carrying a variable speed device for changing the speed of the endless belt. The circular shuttle frame carries the reel (or reels for multiple winding) and rotates around the tire by means of a belt from the overhead shaft. This shaft is driven through a pair of reducing gears from an electric motor conveniently located at the back of the top frame. The reel holding the wrappers is carried around the tire by the annular shuttle frame and wraps the tire as it rotates.

Miller Wrapping Machines

In the Miller wrapping machine the tire lies flat on the table and on horizontal rollers, and is made to revolve horizontally against the stationary rollers in the rear and the adjustable rollers at the

front as it is wrapped. The rotary drum carries a spool upon which is wound the cloth strip for wrapping the tire. This drum revolves on fiber rollers and is driven by two belts. As the drum rotates it carries the spool around with it, wrapping the cloth tightly around the tread.

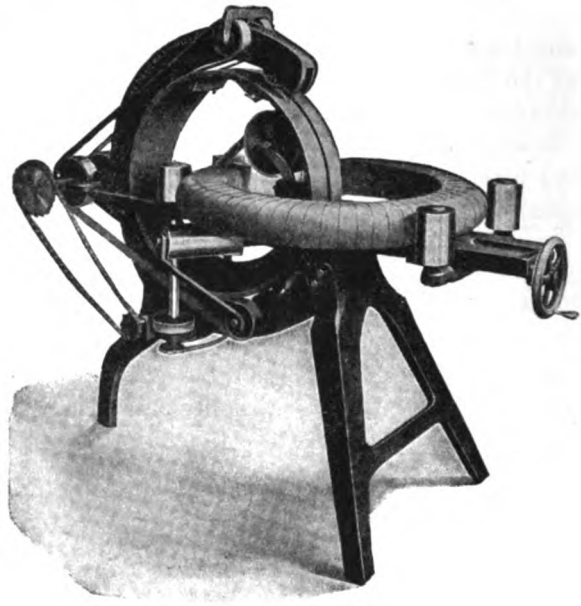

MILLER WRAPPING MACHINE

At the same time the tire advances laterally so that when it has made one complete revolution it is entirely covered. This machine is built for operation either with or without an electric motor as may be required for its ready installation.

Another of Miller's wrapping machines is illustrated in a front and side elevation. The supporting frame *A* is attached to a wall or other vertical support by means of the brackets *B*. A rotating frame *E* is mounted concentrically inside the frame *A* and to this circular frame or ring is attached a bobbin *F* for containing the roll of fabric. The lower side of the ring *E* is provided with a hinged link *C*, which may be swung open to admit the tire *D*. The tension on the fabric is regulated by an adjustable spring *G*, by means of which the bobbin may be pressed against a friction brake-block *H*, mounted on a stationary frame. The ring is rotated by friction wheels *I* mounted on the stationary frame, these gears being driven by a belt

pulley J. The tire-feeding mechanism comprises a bracket K provided with arms L. A screw shaft M passes through this bracket at the upper end and, by means of right and left-handed threads, the levers R may be moved simultaneously toward or away from each other. On the

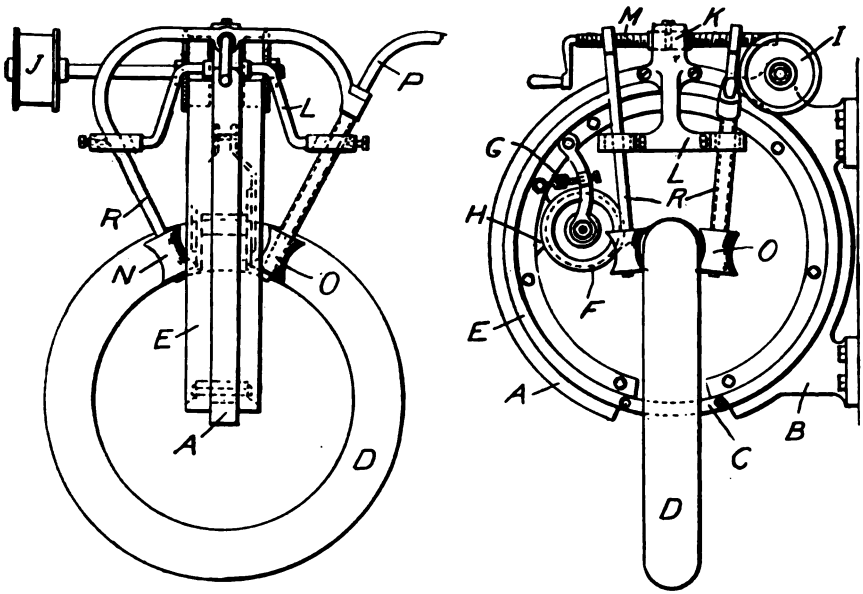

ANOTHER MILLER WRAPPING MACHINE

lower ends of these levers are two pairs of concave pulleys N and O which support the tire. One of the pulleys O is driven by a universal flexible shaft P for revolving the tire. This shaft passes through one of the arms R, which is made hollow for this purpose. When the ring E is set in motion the bobbin is carried around and the strip of fabric is wound on the tire. At the same time the tire is advanced at such a speed that the fabric is given the required overlap. By rotating the screw shaft M the pulleys N and O may be adjusted to accommodate tires of different sizes.

RABER WRAPPING AND UNWRAPPING MACHINES

The construction of the Raber machine is such that the tire can be rotated alternately and separately from the wrapping device, and in an opposite direction. In this manner tape is cross wrapped over the tire. In unwrapping, the machine is reversed and the tape is wound upon a spool.

Williams Cloth Wrapping Machine

Any size of tire up to 42 inches diameter may be wrapped by this machine, and its spools hold enough wrapper to cover a tire once around without rethreading. By means of the open gap only one motion is necessary to put a full bobbin in place and pass the wrapper

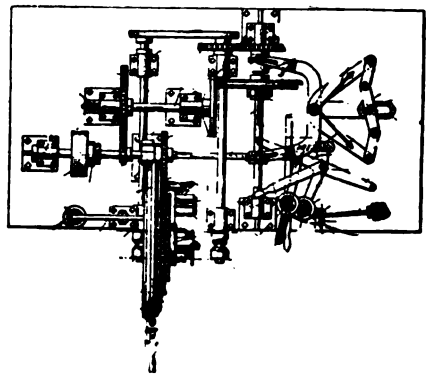

Raber Tire Wrapping Machine

about the tension bars. Uniform tension and even spacing is given in the wrapping, and by pulling the reverse lever a second layer may be wrapped in the opposite direction. In use the tire lies flat on the table and it is not necessary to hold it while the machine is

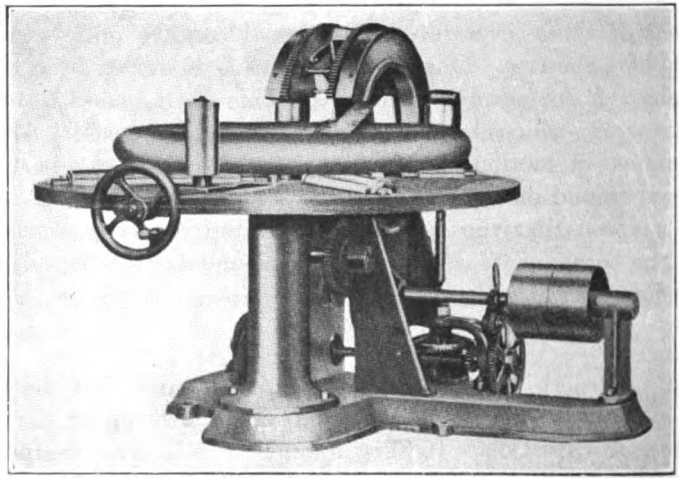

Williams Cloth Wrapping Machine

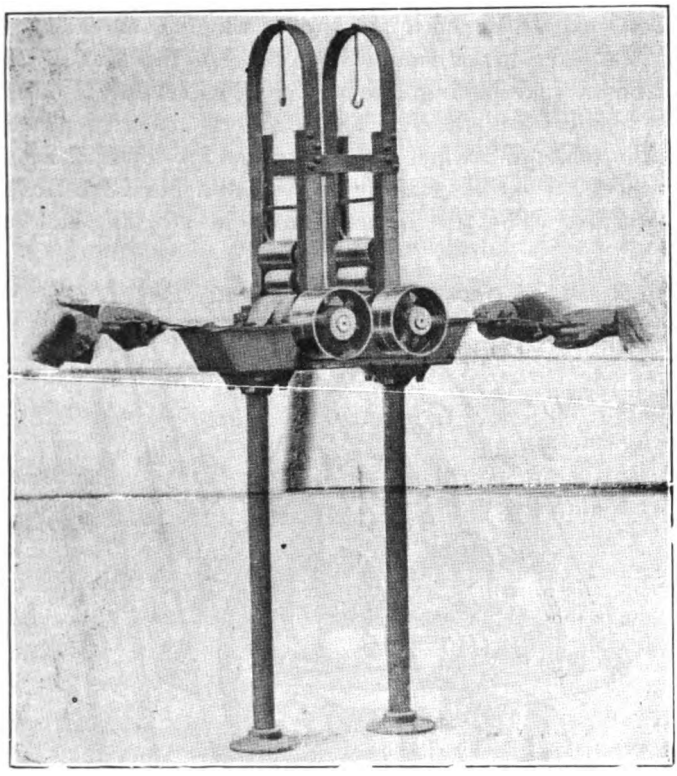

WILLIAMS RAG WRAPPER

being made to take hold. The machine is speedy, yet there is no straining or binding. As an adjunct to it there is a rag wrapper for filling the bobbins.

BRIDGE "OPEN GAP" ENDLESS WRAPPING MACHINE

A machine substantially like the Williams cloth wrapper is manufactured in England under the name of the Bridge "Open Gap" endless wrapping machine.

DE LASKI-THROPP WRAPPING AND UNWRAPPING MACHINE

In the De Laski-Thropp tire wrapping machine the table *A* for supporting the tire *B* rests upon four columns *C* attached to the base. The tire rests upon three conical rollers journaled in the table in such a position that the tire will revolve without touching the table when the rollers are actuated as described further on. Mounted on the table

is an arched yoke *D*, in the upper end of which is threaded a vertical screw shaft *E* carrying a hand wheel *F*. On the lower end of this screw shaft is a yoke having three arms *G*, which bear at their lower ends three conical rollers *H*. These rollers are directly above the rollers in the table, and when the three arms are lowered by means of the hand wheel *F* the rollers are pressed down against the tire with any desired pressure. The tire is maintained in position and prevented

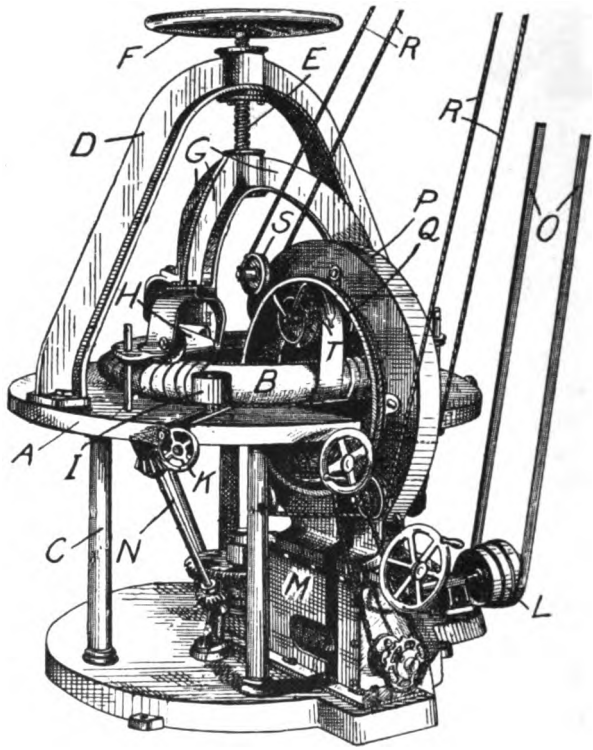

De Laski-Thropp Wrapping Machine

from moving laterally by three vertical rollers *I*. These rollers may be moved radially by means of hand wheels *K* in order to adjust the table for receiving tires of different size. The conical rollers which support the tire are driven from the main driving pulley *L* through a set of worm and bevel gears in the housing *M* and through three slanting shafts *N*, which carry bevel pinions and engage bevel gears on the shafts of the rollers. The tire may be revolved at different speeds by regulating the speed of the driving belt *O* through a variable-speed arrange-

ment on the overhead countershaft. Above the housing *M* is a hollow, annular housing *P* which contains a ring *Q*. This ring has a removable section which is fastened in position after the tire is placed in the ring. On each edge of this ring is a grooved flange which provides a driving pulley to revolve the ring around the tire. Two bands or round belts *R* from the overhead shaft pass around pulleys *S* and then around the flanges of the ring *Q*, thus providing a means of driving the ring. This ring is maintained in position by a series of rollers inside the hollow housing *P*. The bobbin *T* is attached to the inside of the ring *Q* and as the ring is revolved by the belts *R* the bobbin is carried around the tire. The end of the strip of fabric is attached to the tire and as both the bobbin and the tire are revolved the fabric is wrapped around the tire. By regulating the speed of the tire and keeping the speed of the bobbin carried constant, the amount of overlap from the strip may be controlled. By reversing the direction of rotation of the machine the strip may be unwound from the tire. The bobbin carrier is capable of vertical and horizontal adjustment in order to compensate for the introduction of tires with different diameters.

Olier Open Gap Cloth Wrapping Machine

This machine has a driven ring on the inner periphery of which is mounted the fabric bobbin, the tire to be wrapped interlinking with and revolving in a plane at right angles to the ring. The ring is driven by frictional contact with a cone of non-slipping material, and the tire is rotated by frictional contact with driving rollers, against which it is held by an additional roller on a counterweighted slide. The fabric is fed from a bobbin acted on by a brake.

Olier Wrapping and Unwrapping Machine

In general construction this is much the same as the machine just described. Instead of being in the form of a swan neck and open along a part of its periphery, the gear box carrying the guide rollers is closed by a hinged segment, which can be removed to effect the introduction of the tire.

Bridge Cloth Wrapping Machine

Bridge's machine comprises a number of radially adjustable supporting capstans, each of which is positively driven to rotate the tire, and rotatable winding heads, which with their bearing rings are formed in two parts hinged together to allow the introduction of the tire. The machine is readily adjustable for different tire diameters. The speed of the capstans may be constant, or may be varied by means of a lever operated change gear. A spring, or a suitably arranged weight, holds

the capstans against the cover and allows them to move apart as the winding proceeds. One or more rotatable heads, provided with adjustably mounted tape, etc., reels tensioned by brake bands or other devices, are mounted in frames provided with bearings, rings and the heads and rings are each divided into two parts hinged and secured together, as by pins, whereby the tire may be entered within the heads. Each head is driven positively by suitable gearing from the driving shaft, and the heads are also adjustable in relation to one another according to the diameter of the tire. One or more wrappings may be accomplished simultaneously in the same or opposite directions.

Thropp Wrapping and Unwrapping Machine

Upon a pedestal *A* is mounted a stationary operating table *B* provided with rollers *C* which support the tire in a horizontal position. Attached to the table is a yoke *D* having at its upper end a cylinder *E*, which may be operated by compressed air, steam or water, introduced through the supply pipe *F*. The piston rod *G* extends down between the two parts of the yoke *D* and bears at its lower end three brackets *H*. These brackets carry rollers *I* directly above the rollers *C* on the table. When the tire is placed on the rollers *C* the brackets *H* are

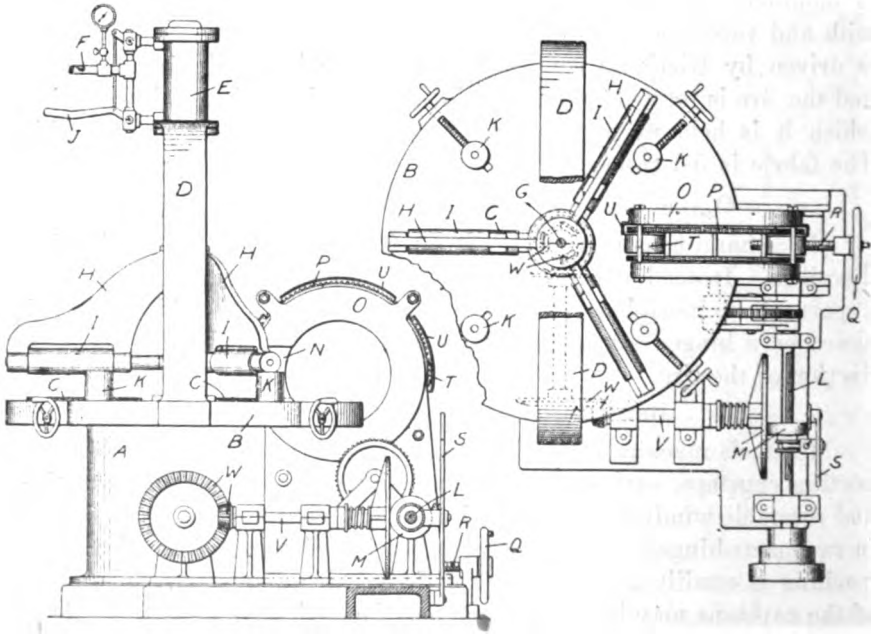

Thropp Wrapping and Unwrapping Machine

lowered by means of the lever *J*, which is manipulated to admit pressure above the piston in the cylinder *E*. Thus the tire is pressed with any desired pressure between the rollers *C* and *I*. The tire is prevented from moving radially by means of vertical adjustable rollers *K*. The horizontal rollers may be driven in either direction, by means of a train of bevel gears *W* from the driving shaft *V*. This shaft is rotated from the main power shaft *L* through a pair of friction disks *M*, which provide a gradual change of speed and also a means of reversing the direction of rotation of the tire.

When the tire is placed on the feed table *B* it is passed through a gap *N* in the annular housing *O* which contains the shuttle *P* carrying the bobbins. The shuttle is formed of two flat ring plates which also have a gap to admit the tire. The shuttle may be moved toward, or away from the table by means of the hand wheel *Q* on the end of the screw shaft *R*, in order to adjust the machine for different sized tires. The shuttle carrying the bobbins is driven through a train of spur gears from the main driving shaft *L*. When the tire is in place the ends of the two wrapper strips are fastened to the tire and to the mold holding it in shape. The shuttle operates in one direction only and at a uniform rate of speed. The rollers *C* and *I* may be rotated at variable speeds and in different directions. Thus it will be seen that as the speed of the tire is decreased the lap of the wrapper strips will be diminished, resulting in a deeper or thicker layer of fabric for each rotation of the tire. As it is the object of this machine to expedite the wrapping, this is accomplished by mounting two bobbins instead of one in the shuttle for carrying the supply of fabric. As the two strips are laid on the tire, one overlaps the other when the shuttle is rotated and the amount of lap depends on the speed of the tire feed. The speed of the tire is varied by shifting the lever *S* forward or back, in order to change the relation of the friction disks *M*. As the smaller disk is moved outward from the center of the larger disk, the speed of the latter will be decreased, while moving it toward the center will increase the speed of the larger disk and consequently of the tire. This machine may also be used for unwinding the wrappers after the tire is vulcanized by engaging the rims of the bobbins *T* with segments *U* on the periphery of the housing *O*, so that the bobbins will be driven in a reverse direction as the shuttle is driven in its usual direction from the power shaft. The strips are attached to the bobbins and the machine is started with the tire rotating in a reverse direction, thus unwinding the wrapper strips from the tire.

Nuttall-Bridge Cloth Wrapping Machine

The special feature of this machine is a device for putting the greatest tension on the fabric strip when the bobbin is at the full diameter and for decreasing the tension as the diameter of the bobbin becomes less, thereby winding the strip of cloth more tightly about the tire.

Midgley Cloth Wrapping Machine

Briefly described, the machine comprises a suitable supporting framework by which the working parts are carried, devices for supporting and slowly turning in their own plane the tire shoe and its supporting devices, a rotary shuttle carrying a spool of wrapping material, and means for rotating the shuttle so as to carry the spool around the tire, and supporting devices in successive turns so disposed in relation to the tire and each other as to form a complete wrapping at uniform tension for such portions of the tire as may not be covered by the tire supporting devices.

In operation the spool of wrapping material is first introduced and secured, then the strip of wrapping material is passed between the tension rollers. The end of the strip is next applied to the tire, which is mounted with its supporting core upon conical supporting members. The machine is then set in motion and the tire and supporting core are slowly rotated in their own plane, while the shuttle with the spool of wrapping material is turned at a rate such as to apply the wrapping in a series of overlapping turns. After a complete rotation of the tire the speed of rotation may be changed and a second layer of wrappings applied having a narrower exposed portion of each turn of the strip than in the first layer. The door is then opened and the wrapped tire and its supporting devices are removed.

Stevens Portable Cloth Wrapping Machine

This machine, designed for wrapped tread tires, provides a spider of novel form on which the tire remains from the time it is taken out of the mold, after the first cure, until the completion of the wrapping process and its removal for the final cure. Moreover, the machine is portable and self-contained, so that it may be brought into action successively upon tires supported on different spiders.

In the drawing, *A* designates the base of the machine, the back of which rests upon legs *B*, while at its forward edge a pair of bars *C* are pivoted at *D*, the upper ends being connected by a handle *E*. When this is swung downwards the ends of the bars are raised from the floor, and the machine is free to be moved about on rollers *F*.

The table *G*, supported by rods *H* and standards *I*, has a central opening above which is mounted on anti-friction rollers the annular gear *J*, provided with a hinged segment that admits the tire to the opening in the table. This annular gear is driven from the vertical shaft that is journaled in the frame and driven by the electric motor mounted on the base plate.

The fabric spool *K*, mounted on the annular gear, contains the wrapping strip *L*, that passes around the tension guide *M* to the tire *N*.

While the tire is being built up, the spider *O* acts as a core chuck, but in the wrapping operation it assists in rotating the core. The spider has three arms supporting the screws that adjust the three rollers *P* to the inner circumference of the tire by miter gearing

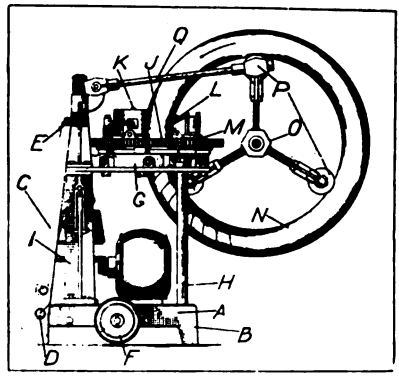

STEVENS WRAPPING MACHINE

located in the hub. Each roller is bushed and key-wayed to fit the short, splined stub of the portable jack shaft *Q* that is driven from the vertical shaft and rotates the tire.

In operation the hinged segment *K* is raised and the machine swung in position so that the tire enters the gap when the segment is closed. Then the jack shaft *Q* that transmits power from the vertical shaft to any one of the rollers *P* is connected up, and the machine placed in motion, whereby the tire is slowly revolved by the pulley *P*, and the strip of fabric *L* is spirally wrapped around the tire by the revolution of the horizontal gear *J*.

BOBBIN WINDERS

THROPP BOBBIN WINDER

The Thropp machine is used for winding the cloth separator strips on bobbins, which are subsequently placed in a tire wrapping machine

for wrapping tires for vulcanization. This bobbin winder takes the fabric strip from the supply roll, passes it through a tank of water and winds it up while wet on the bobbin. The latter is friction driven from the presser roll at the top, the pressure exerted by the roller being sufficient to keep an even tension on the strip and to wind it smoothly and tightly on the bobbin. The tires are wound with these

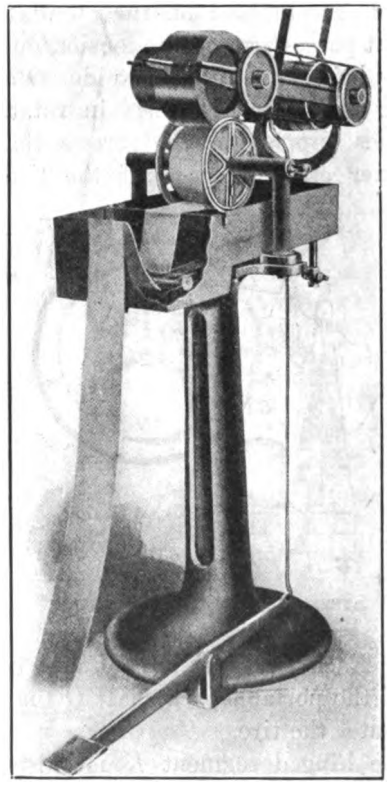

THROPP BOBBIN WINDER

wet strips and when placed in the vulcanizer, the heat drives out the moisture and causes the wrapper to contract, exerting the necessary pressure on the tire.

BRIDGE DUPLEX BANDAGE WRAPPING MACHINE

The Bridge machine answers the same purpose as the Thropp bobbin winder and works in conjunction with the Bridge "Open Gap" Endless Wrapping Machine. The cloth bandage is straightened and

dampened as it is taken from the tire after vulcanizing and rolled tightly on brass tubes. The device is made double so as to rewind two bandages at the same time.

COMBINED CLOTH AND PAPER WRAPPING MACHINES

A few tire wrapping machines are adapted to use either cloth or paper, and some of them also unwind the wrappings.

Kuentzel Tire Wrapping Machine

This machine is designed for cloth wrapping and unwrapping tires before and after vulcanization, and for wrapping tires with paper for shipment. It may also be used for covering rolls of wire with paper or cloth. The feeding mechanism, or that part which rotates the tire, may be described as follows:

The supporting frame is made in two parts *A* and *B* and supports four upright guides *C* upon which reciprocates the carriage *D* which is moved vertically by the screws *E* and *F*. The screw *E* is actuated by the hand wheel *G* and communicates motion to the screw *F* through

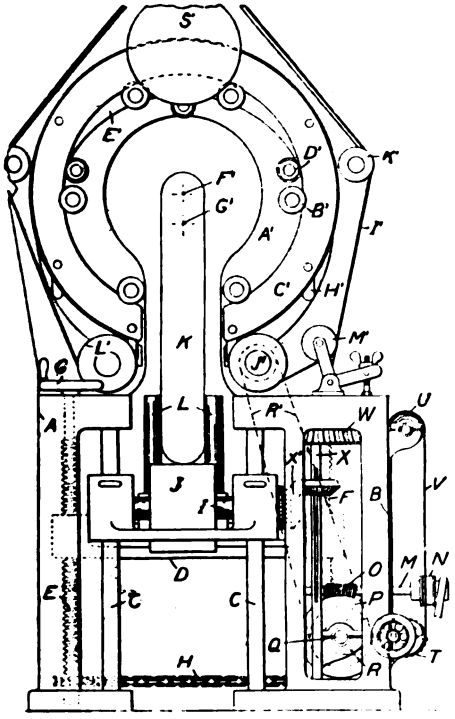

Kuentzel Tire Wrapper

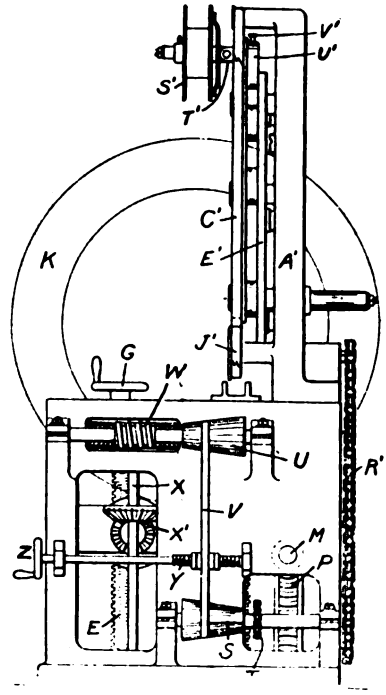

Side View of the Machine

the chain H. Two horizontal shafts I, having their bearings in the carriage D, carry rollers J against which the tire K rests in revolving. Two adjustable vertical rollers L hold the tire in position during its revolution. In order to rotate the rollers J for turning the tire the following mechanism is employed: The driving shaft M, provided with a clutch N, bears a worm O which meshes with a worm gear P mounted on the shaft Q. This shaft bears a sprocket wheel R which drives the cone pulley S through the chain T. A second cone pulley U, which is driven by the belt V, drives the worm gear W which is mounted on the upper end of the splined shaft X. This shaft drives a pair of beveled gears K^1, which in turn drive the rollers J.

The mechanism for winding or unwinding a strip of material about the tire, during its revolution on the rollers J, embodies another mechanism as follows: Mounted on the upper part of the frame is a second frame A^1 which is in the shape of a horseshoe. On the front face of this frame are a number of flanged rollers B^1 which bear a broken ring or annulus C^1. Also secured to the face of the frame are a second series of flanged rollers D^1 which bear a second annulus E^1. These two annuli are mounted eccentrically to each other; that is, the center of rotation of the first is at F^1 and of the second at G^1. These two parts are connected by links H^1 which hold them together but allowing them to revolve on different axes. The two broken rings are revolved by means of a belt I^1 passing over a roller on the shaft J^1, over a series of rollers K^1, over roller L^1 and thence around the outer ring C^1. In order to maintain a uniform tension in the belt, a tightening device M^1 is employed. Motion is communicated from the shaft Q^1 through the sprocket chain R^1 to the shaft J^1 and thence to the belt I^1.

The material to be wrapped around the tire is wound upon a bobbin S^1 which rotates against an adjustable tension spring T^1 in order to keep the wrapper at an even tension. The shaft upon which the bobbin is mounted extends through a link or crank U^1 connecting the two annuli. The end of this shaft is drilled to receive a pin V^1. If it is desired to wrap the tire, this pin is disengaged from the bobbin shaft so that the bobbin is free to turn independently of the link U^1. If a wrapper is to be removed from a tire and wound up on the bobbin so that it can be used again, the pin V^1 is engaged with the bobbin so that the latter cannot rotate independently of the annuli. Thus, as it passes around the tread of the tire the wrapper will be removed and wound up on the bobbin.

By means of a flanged roller on the screw shaft Y, which is operated by the hand wheel Z, the bolt V may be moved back and forth over

the cone pulleys to regulate the speed at which the tire is revolved. A subsequent patent embodies minor changes in the details of the holding device for the tires and the method of drive.

Welton Tire Wrapping Machine

This machine is designed to wrap strips of paper or cloth around pneumatic tires and tire casings, irrespective of their size.

Referring to the illustration, *A* is the base and *B* the annular shuttle, the function of which is to wind the strip *D* around the tire *C*. A portion of the shuttle is cut away, leaving an opening through which the tire is placed on the machine.

The removable flange of the shuttle *B* is formed with peripheral gear teeth. Two driving gears, *E* and *G*, mounted on the frame of the

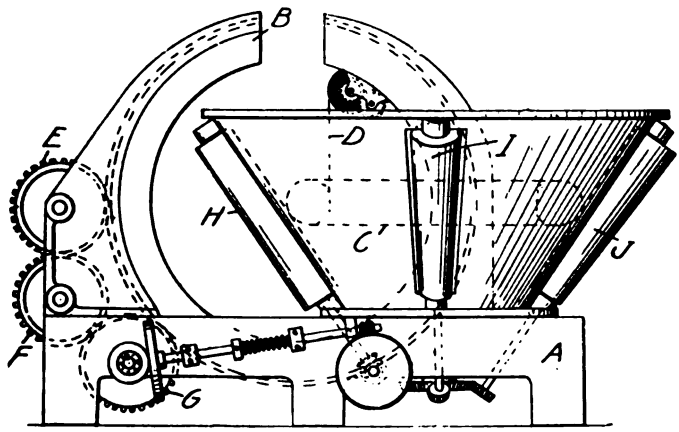

Welton Wrapping Machine

machine, engage with the shuttle gear, being placed apart so that when the cutaway part of the gear is adjacent to one of the gears, the other driving gear will continue to turn the shuttle. An intermediate gear *F* transmits motion from the gear *E*, which is fixed to the driving shaft.

The tire while being wrapped is supported in a horizontal plane by five rollers—*H*, *I*, *J*, and two others not shown. These rollers are inclined and revolve in bearings supported by upper and lower annular frames. A portion of these frames is cut away, leaving a gap which is in the vertical plane in which the shuttle turns. Rollers *H*, and the one opposite (not shown) are the driving rollers, and they are preferably of cylindrical form.

In operating the machine, one side of the tire is passed through the opening in the shuttle and its supporting guide member. The tire will come to rest in a horizontal position in contact with the inclined rollers. When the tire is so placed, it will surround one side of the shuttle, and likewise one side of the tire will be surrounded by the shuttle. The end of the paper or fabric strip is then drawn from the roll and made fast to the tire and the machine set in operation. As the shuttle turns it winds the strip spirally upon the tire which is being slowly turned in a horizontal plane.

CHAPTER XXII

CORD TIRE MANUFACTURING MACHINERY

THE development of the cord principle, a revolutionary construction of the pneumatic tire, brought with it a long and completely new series of machines for forming and preparing the cords and cord fabrics and building them into the tire carcass. For the construction of cable cord tires there are machines for impregnating yarn, thread and cords with rubber and drying them; cord forming machines for grouping and twisting together threads, strands and cords into cables and flattening them into heavy tapes, and cord laying machines which wind these cords on an annular tire core. For the construction of cord fabric tires there are special looms and machines for making and coating the fabric in sheets, and strips; also numerous cores, cord anchorages, machines and devices of a miscellaneous character.

CORD FORMING MACHINES

The backbone of the Palmer and Silvertown cord tires is a cable cord, which is made up as follows: Four or six unit threads, usually six, and about the size of sewing cotton, are impregnated with rubber solution in the Sloper thread solutioning apparatus already described, passed through a steam heated drying chamber where the solvent in the rubber solution is evaporated, and while still warm are twisted firmly into a strand or unit cord capable of withstanding a breaking test of 230 pounds. These strands, in groups of three, four or six, usually four, are in turn passed through solutioning, drying and twisting apparatus of similar design but larger dimensions to form a cable. The cable is then led through a high pressure solution of rubber once more, dried, flattened by rollers and wound upon a spool ready to be supplied to the tire carcass laying machine, every thread and cord in the cable being thoroughly saturated with rubber and insulated from all the others. The finished cable is 40 per cent. rubber by weight. Several special automatic machines are employed in preparing this cable.

Sloper Cord Twisting Machine

This machine takes the unit strand, composed of four or six grouped and impregnated threads, as it emerges still warm from the

steam drying chamber, twists them firmly and uniformly together and winds the resulting strands on a spool. An electric switch operated through a delicate tension mechanism automatically stops the twisting machine if the tension varies over a certain allowable per cent.

Sloper Cabling Machine

From the twisting machine the spools of twisted strands or unit cords are transferred to another Sloper high pressure solutioning apparatus of larger dimensions than that used for thread, in which three, four or six, usually four, strands or unit cords are coated with rubber, grouped by a die, drawn through a steam heated drying chamber and twisted firmly together by a cabling machine substantially like the twisting machine, but of larger dimensions. The complete cable cord now consists of several threads, usually twenty-four, spaced equally, each thoroughly impregnated with rubber and insulated by it from all the other threads.

Sloper Cord Flattening Machine

The cable cord is now ready for flattening to the required size, and this operation is performed in a machine which passes the cord through guides and between carefully adjusted steel rollers and winds the cable rather loosely on a reel or spindle.

The reason for flattening the cable is that the tread circumference of an automobile tire is about 30 per cent. longer than the bead circumference. Since there is the same number of cords on the tread circumference as on the bead circumference, the use of round cord leaves wide spaces between the cords along the tire tread which must be filled with shaped pieces of rubber, a slow, inefficient and costly process. This is obviated by flattening the cord and laying it edgewise at the bead but giving it a quarter turn to flatwise across the tread and back to edgewise again at the opposite bead. By this simple method a uniform fabric is made without filling pieces and the strength of the tire is increased fully fifty per cent. by reason of the greater number of cords that can be built into each ply because of their edgewise arrangement at the bead.

Sloper Rewinding Machine

From the cabling machine the spool of cabled cord is transferred to a very similar rewinding machine, which flattens the cord a few thousands of an inch more and winds it evenly on spools ready for the cord carcass laying machine. By means of a sensitive gage the cord is carefully tested from time to time for size.

GRAY-SLOPER CORD TAPE FORMING MACHINE

The diagrammatic plan view shows a method of manufacturing cord tire fabric. *B* shows the double fabric after being shaped. The cords *C* are first impregnated with rubber solution and are passed between rollers *D*, which flatten the cords out so that the section of each cord is oval or rectangular in shape.

The cords leave the rollers with their wider faces towards the latter and their narrower faces towards each other. To bring them into the position required they are carried around pins *E* at an angle of about 90 degrees to their former course. In passing around the pins, the cords are turned so that their wider faces are toward each other. In this position the cords are passed between rollers *F* and *G*, which press them together so that they adhere, by means of the pulley

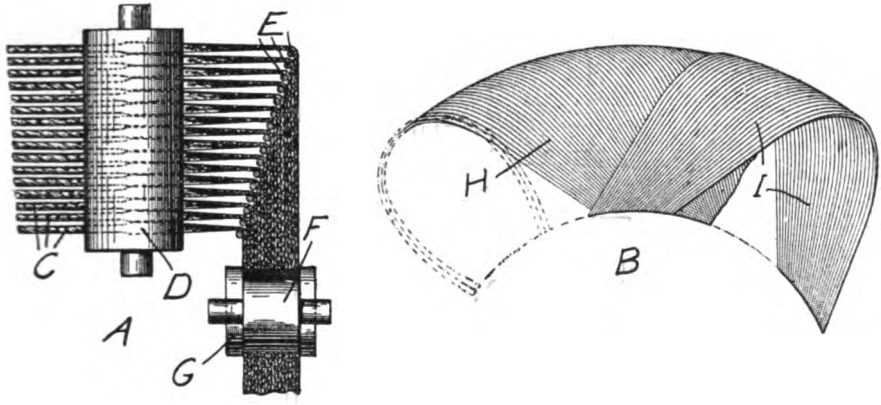

GRAY-SLOPER CORD TAPE FORMING MACHINE

with which they are coated. The lower roller *G* is provided with end flangers to prevent the cords from spreading apart laterally under the pressure. By this means the fabric produced is composed of a series of parallel flattened cords, with their wider faces contiguous and connected together by rubber. After the cords are brought together, any desired thickness of rubber may be placed on both sides of the fabric so that the cords are embedded in rubber as well as connected together by it. The whole may then be vulcanized in a solid mass.

In making a tire carcass the cord fabric composed of two layers is rolled or pressed at the center or tread portion so that each cord expands in the direction of the circumference of the tire and is thicker at the edges of the fabric than at the center. The drawing *B*

shows a portion of a tire carcass built up of two layers of fabric *H* and *I*. The cords of each layer of fabric cross the tire diagonally from edge to edge, so that they lie at right angles to each other. After shaping the fabric it may be covered with any desired thickness of rubber or frictioned fabric, producing a strong tire casing.

Tew Flat Tubular Cord Machine

Tew's machine twists the strands of yarn into a hollow cord and at the same time impregnates them with rubber solution. This not

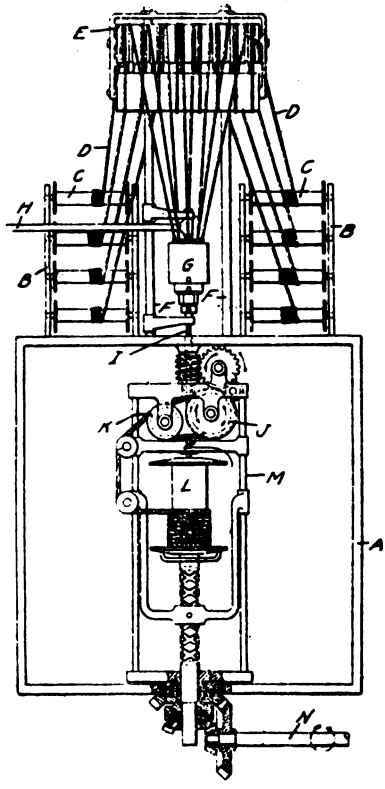

Tew Flat Cord Machine

only cements the strands together but insulates them and prevents the wearing of one against the other.

Referring to the illustration, which is a side elevation, *A* is the frame of the machine and *B* the uprights that support the bobbins *C*. The strands *D* are led over guide rollers *E* mounted in the top frame

which is supported by the standards *F*. The strands then pass down through the stationary casing *G*, in which they are impregnated with rubber solution supplied through pipe *H*.

Within the casing the strands converge about a conical former and pass through a tubular die that acts as a guide for the cord *I*. The completed cord then passes through the hollow journal of the frame and around guide pulleys *J* and *K* to the bobbin *L*. When the frame *M* is rotated by bevel gearing connected to the driving shaft *N*, the strands are twisted into a tubular cord, which is drawn down and wound up on the traveling bobbin.

CORD TIRE CARCASS LAYING MACHINES

Swain Cord Laying Machine

The carcass of the tire wound by this machine comprises rubber coated circumferential threads and transverse threads. The mandrel is slowly rotated in a vertical plane between two rollers by means of a third roller, and the mandrel passes through the centre of a horizontal disk, which is rotated by bevel gearing. The disk carries bobbins from which the threads uncoil on to the slowly-turning mandrel. The circumferential threads are wound on the mandrel by a similar machine. The mandrel has a slit along its inner periphery, to allow the canvas to be cut. The threads may be replaced by leather, metal, or like strips, and the transverse threads may be replaced by ordinary fabric.

Swain Improved Cord Laying Machine

In this form of machine for winding on the threads, the thread passes through a guide to a shaped mandrel, which is held on a rotating table by means of spring controlled radial bars secured in position by a cam. The table is rotated from a shaft which also, moves the guide slowly across the periphery of the mandrel. The thread is pressed on the mandrel by a roller to which a motion corresponding to that of the guide is transmitted. When the winding is complete, a roller raises one end of a pivoted bar, which releases a catch and allows a spring to move the belt from a fast to a loose pulley. In a modification, the guide and roller are carried in a spring-pressed arm, which is slowly moved across a cam shaped similarly to the cross-section of the mandrel. Movable bearings and a slot allow mandrels of different sizes to be employed. The mandrel is supported between rollers, one of which rotates it. The thread may be fed on either by the means above described or by hand, guides and pressing-rollers being employed. The upper parts of the frame may be pivoted

to the lower shafts to allow of removal of the mandrel. In another form, a mandrel is secured to a fixed horizontal table and the thread is fed through a guide carried on a rotating arm. The guide and pressing-roller are moved slowly across the periphery of the mandrel, preferably by means of levers. The threads may be replaced by strips of leather, metal, or the like.

Palmer Cord Laying Machine

The cut shows part of the Sloper machine for laying Palmer cord tire carcasses cut away for convenience of description. In this apparatus the cord is fed from a supply bobbin to a combined tension regulator and governor, which regulates the delivery and maintains a reserve supply of cord under uniform tension. A folding device measures off an exact length of the cord and folds it into a double loop. Automatic fingers then seize the loops and place them around the core or tire "former," hooking the loops on pins to hold them while the fabric is being built up.

The cord *A* is fed from a bobbin through a tension regulator, and passes over guide pulleys *B* and *C*, at the same time passing in

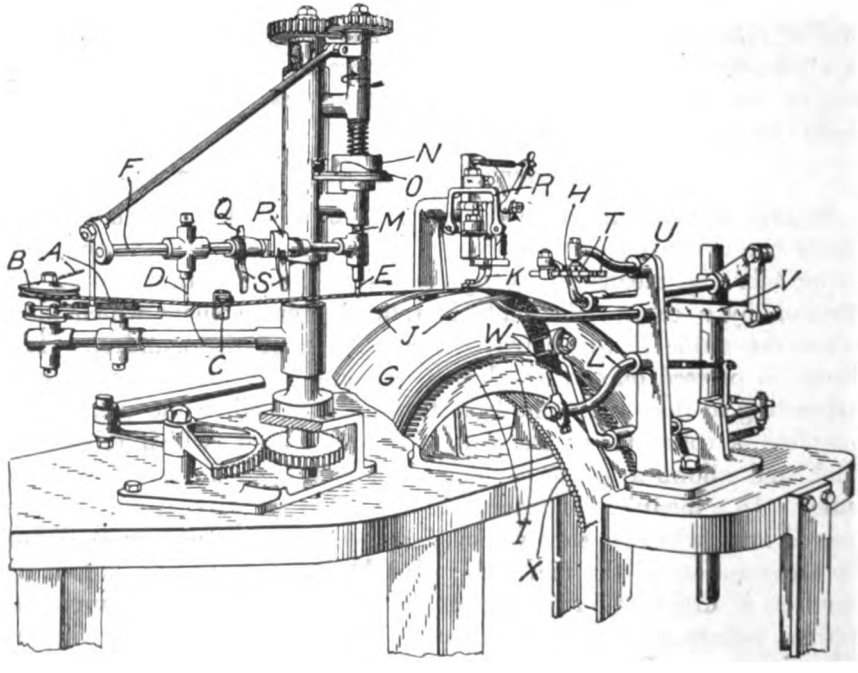

Palmer Cord Laying Machine

front of an adjustable pin *D* and behind a fixed pin *E* on an arm *F*. This arm is arranged to swing across the core *G*, during which operation the cord is looped, the loops being transferred by arms *H* to pins *I* on each side of the core. One of the transferring devices is located on each side of the tire. In using flattened, rubbered cords, fixed guides *J* are provided to turn the cords into the proper position on the core. Those guides turn the central portion of the loops so that the flat surface of the cord is laid against the core to form the tread of the tire, while at the side of the tire the flattened cords stand edgewise against the core. When the cord is presented to the core it is temporarily held by a spring-controlled presser foot *K*, while the transferring devices *H* place the loops over the pins *I*, after which a pair of arms *L* operate to consolidate the cords on the core.

In order that the pin *D* may fall behind the cord *A* at the commencement of each cycle of operations, the shaft *M* and the arm *F* are caused to rise during the return motion by means of a spring-controlled cam *N* co-operating with a cam *O* in a bracket in which the shaft *M* is free to turn. The cam *O* is locked during the return of the arm *F* by means of a spring pressed pawl. The presser foot *K* is raised by a striking plate *P* pivoted on the arm *F*. At the same time lugs *Q* abut against a yoke *R* so that the fingers *S* advance the cord over the guides *J*. The plate *P* having cleared the presser plate, the foot descends and holds the cord while the loops are being transferred to the pins *I*. Each transferring device comprises a rocking shaft *H* carrying at one end a pair of fingers *T*. Between these fingers is pivoted a tumbler having a notch U to engage the cord. As soon as the presser foot *K* has gripped the cord, the fingers *T* descend and transfer the cord from the pins *D* and *E* to the notched tumblers *U*. By means of a tripping device the fingers *T* then transfer the cord from the notch *U* to the pins *I*.

In order that the transferring device near the pin *E* may not foul the cord, means are provided whereby the crosshead *V* connecting the two transferring devices is brought to rest at the limit of its upward motion until the cord has cleared. In order to afford the necessary clearance for paying on the successive loops of cord, displacing arms *L* are provided. Each of these comprises a pair of claws *W* mounted on rocking arms which have a spring-controlled longitudinal motion. These claws catch the cord and force the loops tightly together, at the same time providing clearance for placing a new loop on the next pin *I*. The core is rotated the distance from one pin to another during the laying on of each loop, by means of a ratchet mechanism

engaging teeth X on the inside of the core. In starting the first loop, the cord is carried from the pulley B to that pin I on the core, which will give the cord the desired diagonal position in the finished tire. Each succeeding loop of cord will then follow this same angle.

Silvertown Cord Laying Machine

This machine builds the carcass of Silvertown cable cord tires of straight bead and both regular and Q. D. clincher types, two plies of strong, flat-cabled, rubber impregnated cord being used.

Briefly, the "make-up" of a Silvertown tire is as follows: First, a ply of rubber gum which becomes the inside or lining of the tire: then a ply of rubber-impregnated cable cords, and on these another ply of gum; then a second ply of cords, two plies of cushion stock and finally the breaker strip, outside tread and sidewalls.

The casings are built up on steel cores provided with detachable side rims which hold galvanized steel staples with their disconnected ends protruding. These staples provide an anchorage for the cords while being laid, and also keep the beads in place.

After the core and rings have been assembled, and before any cords have been laid, a sheet of rubber gum is stretched completely around the outside of the core and down to the staples on each side: this rubber sheet becomes the lining of the tire. The core is now placed on the cord laying machine.

An arm of this machine draws the cord from a steel spool and folds it into a loop. As this arm swings across the core, the looped cord is caught by steel fingers, brought down and hooked over the staples. Other steel fingers then draw the cord back along the core, close to the others, allowing the next loop to drop into its place, and so on. As the long arm swings back to get another double loop of cord the core is revolved slightly forward and is ready for the next double loop. The cords are laid under an even tension across the core and around its entire circumference at an angle of about 45 degrees. At the anchorage or smaller circumference of the tire the cords are arranged on edge, and as they approach the tread or larger circumference of the tire each cord is given a quarter twist so that it is flat on that part of the core corresponding to the tread. After the first ply of cord is laid, two sheets of rubber gum are applied to act as a cushion between the plies, and the second layer of cord is applied, at right angles to the first. Each cord ply is laid in about ten minutes. The core is now placed on the building stand where two layers of cushion stock, the breaker strip and tread are applied. The detachable rings and core are then removed and the carcass is sent to

the beading department. Here the beads, bead covers and side strips are put on. The bead of the clincher cord tire is made up entirely of fabric, with a small amount of hard rubber in the channel and lip. The steel staples, over which the cord is looped by the cord-laying machine, are fitted into a slot under the channel of the bead, so that when the tire is vulcanized the cord loops will be held securely, without interfering with the flexibility of the bead.

The beading or finishing consists of the following operations: The fabric protection or stiffening strips are supplied on the inside of the tire, covering the staples. The bead is put on by fitting the slot in the bead over the points of the staples and stitching the lip of the bead to the side-wall. The first ply or open weave bead cover is then applied. The close weave or second ply bead cover is next applied; this starts a little lower on the sidewall than the first ply and extends completely around the bead and over the stiffening strips on the inside of the tire. A narrow strip of pure gum is lapped over the edges of the bead covers on the sidewall. The side strips are lapped over the edges of the tread and stitched down to the channel of the bead.

The tire is next sent to the curing room, where it is vulcanized under heavy pressure. The rough edges are then trimmed, the flap inserted, and the inside painted.

There is but little difference between the construction of the straight bead cord tire and the clincher cord tire except at the beads. No staples are used in the straight bead type. Each cord as it lies in the tire at an angle of 45 degrees, is a unit in itself. The outer cords pass down along the side of and under the bead, where they end; and also meet the inner cords. The wire cable bead cores lie between the two layers of cords. The completed tire is 60 per cent. rubber and its construction results in uniform tension in all parts.

Bayne-Subers Tire Winding Machine

The Bayne-Subers machine is used for winding pneumatic tire carcasses from rubber coated cord as the cord comes from the coating apparatus. The machine applies the cord in circumferential windings, while the transverse cords are laid on by hand. Referring to the illustration, which shows a front and a side view of the machine, *A* is a detachable, collapsible metallic tire core upon which the rubber-coated cords are wound. The core is mounted upon the rim of a wheel *B* which is revolved by the two hand cranks *C*. In order to provide for the removal of the wheel and core from the machine, the shaft *D* is split at *E* so that it may be drawn apart. Upon each

side at the top of the core is a wheel F, over which the rubbered cord passes to be wound on the core. These wheels are mounted upon spring forks in blocks attached to the platforms G. In the centre of each of these platforms is a nut which engages the screw H. These screws are revolved by means of bevel gears I when the driving shaft is turned, thus raising the platform G and the wheels F as the winding progresses. The rubbered cord J passes directly from the coating apparatus over the guide wheels K and around the wheels F to the lower edge of the core. As the core is revolved the cord is built up along the sides until the wheels come almost in contact with another pair of wheels L. The latter receive rubber-coated cord from the guide wheels M and wind it upon the tread portion of the core. The wheels

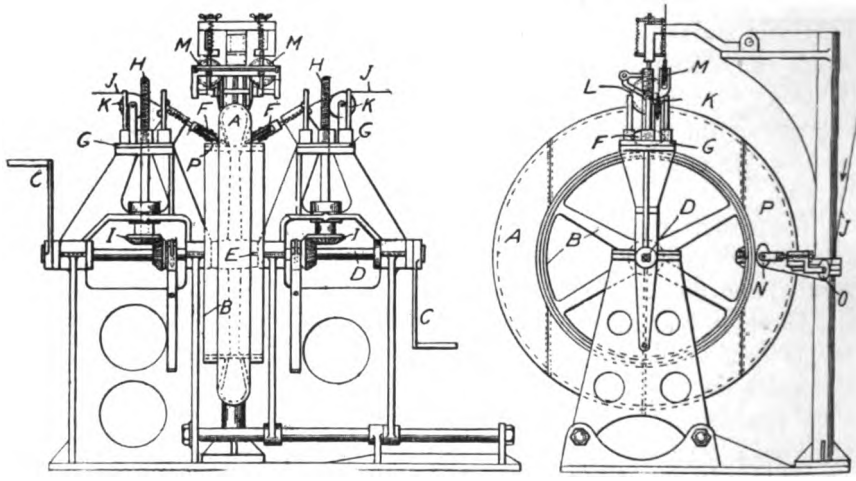

BAYNE-SUBERS TIRE WINDING MACHINE

L are mounted loosely on their shaft so that they move toward the centre of the tread as the cord is wound. At the sides of the core is a third pair of wheels N which receive the cord from the guide pulleys O, and wind it upon the flat beads or flanges P. These three winding operations are carried on simultaneously, and since the cord comes directly from the coating machine, the windings adhere to each other and form a continuous layer of cord and rubber. Upon this circumferentially wound layer a second layer of transverse cords is applied by hand; then a third layer is wound on by the machine. The tire is thus built up until the desired number of layers are applied, after which the tread is applied and the rubber is vulcanized as usual.

Hyatt Endless Cord Fabric Machine

Referring to the illustration, *W* is an elevation showing part of the zigzag sewing machine; *X* is a vertical section table showing the tension and feeding devices, and *Y* is a vertical section of the sewing machine. The small drawing *Z* shows the means for winding the saturated warp, and Z^1 is a cross section of the forming core. The threads are saturated with rubber solution by passing under the roller *A* in the vessel *B* and then through a guide *C* which removes the surplus solution. The warp, whether twisted or grouped is wound on tire former *D* which is provided with notches *E* acting as guides. The ends of each cord after completing the circle overlap about 12 inches. Each concentric cord is laid around the periphery of the tire following the guides. Tape *F* is applied to hold the trough-shaped warp in shape. The former *D* is made so that the outside sections collapse when the center is removed, which permits the former being withdrawn from the warp sufficiently stiffened by the solution. *G* is the sewing machine table and *H* the standards carrying driving shaft *I*.

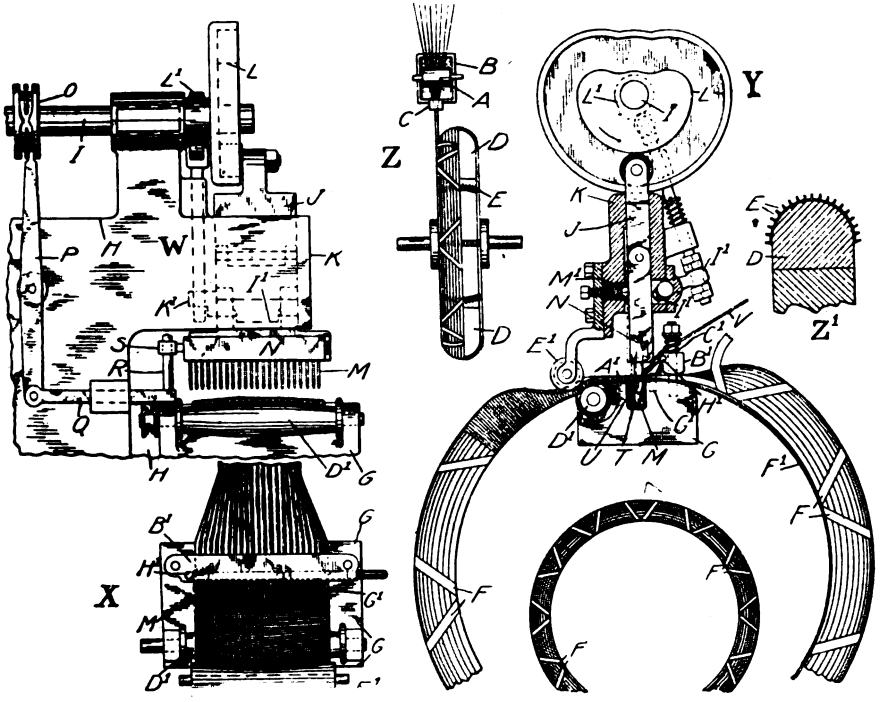

Hyatt Endless Cord Fabric Machine

The upper section of the needle bar J is fitted to a guide K and is reciprocated by a cam L upon the shaft I. A row of needles M is fixed to a carrier N which moves across the bottom of the needle bar and is reciprocated transversely by a cam O, through lever P and link Q. The link carries a stud R fitted within an eye S upon the end of the carrier N, thus reciprocating the carrier as the needle bar moves up and down. The needles in their descent pass into grooves T in the bed G and the loops U of the sewing machine thread V are engaged by a looper A^1, which connects all of the loops on a lock thread. A presser or tension bar B^1 extends across the flattened part of the warp and is pressed down by springs C^1, adjustable to vary the pressure and tension. At the opposite edge of the table is a spindle shaped feed roll D^1 rotated during the sewing operation by driving wheel E^1. This roll being convex, feeds the middle of the flattened warp at a greater speed than the edges, in the same ratio as the center of the warp exceeds the edges in diameter. A concave roll E^1 presses the warp upon D^1, thus advancing it under the tension produced by presser bar B^1 at a suitable speed to space the rows of zig-zag stitches formed by needles M.

An endless coil of wire F^1 is sewn into the warp. A row of comb teeth G^1 separates the warp strands and assists the penetration of the needles, and determines the exact width of the fabric. A jet of foam is projected from H^1 upon the needles and warp so that the needles will operate freely. The strands are held firmly together during their passage beneath tension bar B^1 and are thus compelled to feed forward in proportion to their distance from the center of the warp. The effect is to dispose the transverse rows of stitches farther apart at the middle of the warp than at the edges. In order to crowd the rows of transverse stitches together, a dog I^1 on the guide K of the needle bar J crowds the lower hinged portion of the needle bar forward while the needles are between the warp strands. This moves the needles toward the roll E^1, pressing the last row of stitches firmly against those previously made. The dog I^2 is fastened on a rock shaft with an arm K^1, reciprocated by a cam L^1 on the driving shaft. The cam gives the hinged portion of the needle bar only a brief impulse and the needle bar is then restored by spring M^1 to its normal position. This backs off the needles, which are free to rise from the warp clear of the last row of stitches.

Bane-Meredith Tire Winding Machine

In this machine for winding threads of cotton or wires upon a mandrel or former, a number of threads, etc., drawn from reels,

mounted in a circular cage, are passed through holes in guiding plates so that all the threads are laid simultaneously side by side upon the mandrel. A fabric made of parallel threads solutioned together may be substituted for the separate threads and guided into position by suitable rollers. The reels of thread are driven through one of two trains of spur gearing, which are mounted in a pivoted carrier, so that the direction of rotation of the carrier can be reversed when one layer has been wound. The threads are attached to the mandrel by rubber solution, and one layer is wound; the direction of rotation of the cage is then reversed, and another layer is wound.

Harris Cord Wrapping Machine

This is a universal wrapping machine designed to make cord tires, frictioned fabric tires, to cloth-wrap tires for open curing and, finally to wrap the finished tire with paper strips to avoid damage

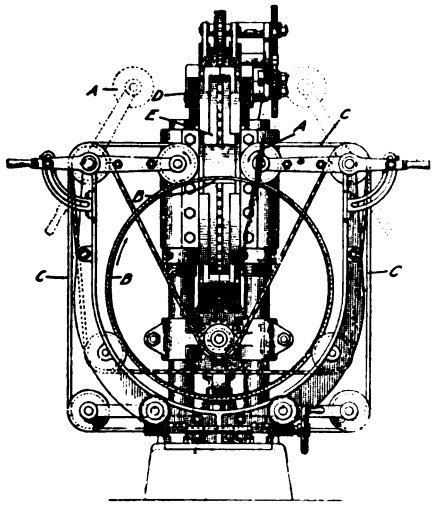

Harris Cord Wrapping Machine

in shipping and while in stock. The diagram is a front elevation. Belt rollers *A* are elevated, as shown by the dotted lines, and a pair of steel bead rings *B* are introduced into the side grooves of the endless belt *C*. This belt *C* now serves to rotate the bead reinforcing members *B* in the direction shown by the arrow. A bobbin *D* carrying a supply of rubberized cord or tire fabric is rotated together with shuttle *E*, and the end of the cord is led over tension rolls to one bead

ring. When the driving mechanism is started, the shuttle *E* and the bead rings will be rotated in a clockwise direction at varying speeds in interlinked relation, the cord being thus wound in closely adjacent loops over and around both reinforcing bead rings until the entire space is covered by adjacent parallel strands collectively forming a hollow, flat, tube-like, two-ply annular body material for the tire. A repetition of this winding process will produce a four-ply body material built upon the same bead rings, and so on, until any desired number of superimposed layers of rubberized cord or tire fabric have been added. By varying the relative speed of the shuttle and the bead rings, a different angle of applying the cords may be obtained—a feature very desirable in a carcass built up in this fashion.

Dees Cord Laying Machine

With this machine two rubberized threads are simultaneously and helically wound under uniform tension around a rotating annular mandrel at two different points to form superposed plies having the diagonally disposed adjacent threads substantially parallel and those of one ply oppositely inclined to those of the other. Each coil of thread is formed by laying the thread diagonally across one side of the mandred to form approximately one-half of the coil, and then laying the cord on the opposite side of the mandrel at a point approximately opposite to and parallel with the cord forming the first half of the coil.

Briefly, a rotary winder in the form of a reel carries four thread bobbins and also the rubber solutioning cylinders. The threads are first impregnated with rubber solution and then passed through rubber dough under pressure. As the mandrel moves at a slower speed than the rotating winder, the threads are laid in closely arranged coils so that the rubber encasing each thread is in close contact throughout and on vulcanization is united in a solid mass in which the threads are completely embedded and effectually cushioned. When the mandrel has turned one complete revolution, it is covered with a double ply of oppositely placed diagonal threads. Separator rings are applied to certain parts of the carcass.

Coesir Cord or Strip Wrapping Machine

The core is rotated and the spools of material, mounted on the ends of two arms that revolve in opposite directions, apply the strip or cord circumferentially, beginning at the sides and continuing toward the middle of the core, where the two series of convolutions meet.

Denman Tire Winding Machine

This is a machine for building up the carcass of the Miller cord tire, which consists of several layers of rubber impregnated cords wound spirally around an annular core, each layer at a reverse angle to the foregoing. The carcass is then slit along the inner circumference and removed to a second core on which the tire is completed.

The building core is rotated and a hinged bobbin cage containing two spools of cord is rotated around the core in the desired direction to wind the cord upon it. When the bobbin cage is rotated in one direction, cord is fed off one of the bobbin spools, whereas when the bobbin cage is driven in the opposite direction cord is fed off the other spool and wound on the core at a reverse angle to the first layer. The ring core is supported by pneumatically controlled slidable arms, which successively withdraw and return to position as they pass the bobbin ring when that portion of the core is being wound with cord, or may be simultaneously disengaged for removing the ring core from the machine. Eccentric gears cause the bobbin cage to be alternately accelerated and retarded in its rotary motion about the ring core in order to vary the angle of inclination of the cord on the ring core, the result being that the cords are spaced apart at the tread portion of the carcass and nearly in contact along the inner circumference of the core.

After winding one ply, or if desired, two plies, of cord about the ring core, two pneumatically operated supporting frames press bead cores firmly against the opposite sides of the cord carcass. The bead core mechanism is then withdrawn and the remaining ply or plies of cord wound on.

A reverse gear which is thrown into or out of engagement changes the direction of the winding bobbin cage for each ply of cord, and the two bobbin spools are used in alternation according to the direction of winding. Variations and adjustments of the several parts enable the machine to be used in the construction of cord tire carcasses of different dimensions.

McLeod Cord Carcass Laying Apparatus

This is an annular cord holding device substantially flat in cross section having rows of supporting elements extending through the margins of the cord web or tire skeleton, which is produced by winding cord diagonally across the support in substantially straight lines instead of arcuate paths around a mandrel conforming to the shape of the tire. Any suitable winding mechanism may be utilized and the completed tire carcass may include any desired number of plies

of cord. Cord-holding rings are detachably secured to the margins of the annular support by yieldable latch members. Cord-holding pins are slidably fitted to the cord-holding rings and project from their peripheries. Springs tend to move the cord-holding pins to their inoperative position, and each cord-holding ring is provided with a circular row of the cord-holding pins which are retained in their operative positions by expansible rings.

Before winding the cord on to the supporting elements, tubular rivets are placed over the projecting portions of the cord-holding pins and these rivets are connected by means of rings which may be made of vulcanized rubber or any other suitable material.

A sheet of raw rubber is placed over the outer ends of the rivets and seated on the connecting rings. The inner fabric layer is formed by winding cord partially around the rivets to produce a zig-zag winding consisting of cord elements each of which lies at an oblique angle to the side edges of the structure. A sheet of raw rubber is placed over the inner cord ply and the outer cord ply is then wound on to the rivets so that its cord elements lie at an angle to the cord elements of the first ply.

Upon the completion of the winding operations, the cord-holding pins are withdrawn from the rivets and the outer ends of the rivets are upset to securely connect the ends of the cord elements to the connecting rings. The cord-holding pins may be readily withdrawn from the rivets by removing or contracting the expansible rings, thus permitting the springs to shift the pins to their inoperative positions. It will be noted that each individual cord element may be firmly secured to the connecting rings by the rivets so that each cord element is a unit securely held at is ends, and although the different cord elements may be formed of a single cord, the different units are so secured that one or more of them may be ruptured without releasing any of the remaining cord units.

After the rivets have been upset to secure the cord elements to the connecting members, the cord-holding rings are detached from the annular support, and tire beads are then roughly formed at the free side margins of the fabric. Raw rubber is applied to the cord web and tire forming rings are secured to the margins of the annular support. These tire forming rings may be secured by the latch members which also serve as means for attaching the cord-holding rings to the annular support. The raw tire structure arranged on the annular support is shaped by means of a roller and after this operation. it is removed from support.

KLINE TIRE CORDING MACHINE

A perspective view of the machine is here shown in which *A* is the standard supporting the spider bracket *B*, the back-geared motor *C*, the cord receptacle *D* and the cord laying mechanism *E*. The pivoted and vertically adjustable spider head *F* is provided with adjustable radial arms and concave rollers that permit rotation of the tire core *G*. Pivoted in evenly spaced slots around the bead circumference on both sides of the core are spring-controlled cleats *H*, over which the cords are looped.

The cord laying mechanism consists of an outer-geared ring that is geared to the motor, and revolves around an inner stationary ring, both being provided with hinged segments for admitting the

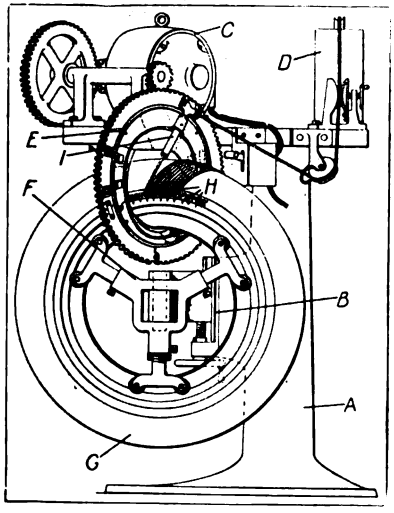

KLINE TIRE CORDING MACHINE

core. The cord passes from the cord receptacle over a tensioning device, through the twisting tube *I* and is fastened to one of the cleats. When the motor starts the outer ring revolves, the cord is laid diagonally across the core and looped over the anchor cleats, the intermittent motion being controlled by fingers attached to the outer ring that reverse the motor, meanwhile the core is advanced by a rib on the ring flange that alternately engages diagonal intersecting grooves milled on the inner periphery of the tire core.

When the first layer is applied, the anchor beads are put in place, the cord cut, the core tilted, and the second layer is applied in an opposite diagonal direction to the first.

Dickinson Automatic Cord Tire Building Machine

Due to the novel method employed in carcass construction, the production capacity of this machine, it is claimed, will average 25 tires per hour. Moreover, the construction permits the saving of materials that are wasted in ordinary cord tire building processes.

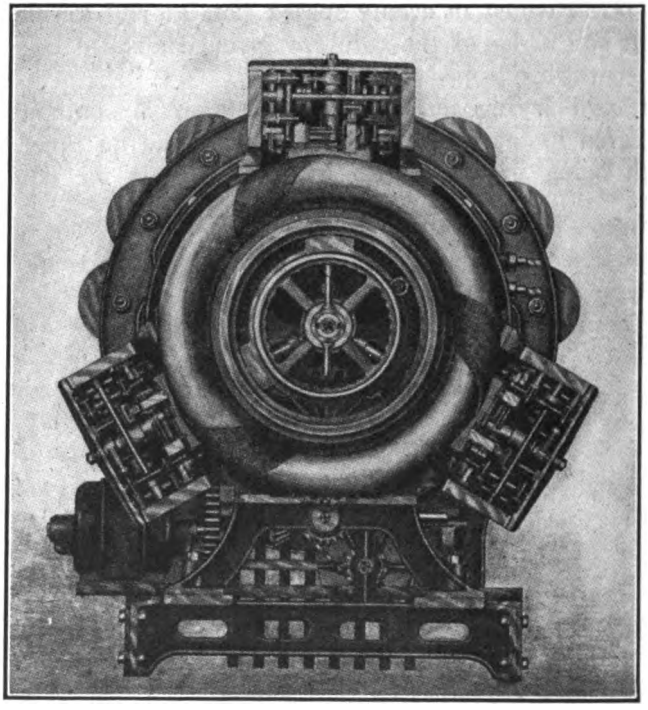

Dickinson Tire Builder

The machine is practically automatic in operation, as the operator has only to do with starting, stopping, supplying the necessary material, setting the cores in place and removing them with the finished carcass thereon. The present type machine lays fifteen cords simultaneously in units of five cords each at three points over the core, one hundred and twenty degrees apart, the cords being fed from fifteen reels or bobbins through tensioning apparatus, imparting to each cord a fixed stretch or tension, automatically controlled to insure uniformity. Each unit of five cords is carried through a forming die in which pressure is applied throughout the strip length to obtain

the required progressive shape to cover the variable area between bead and crown. The strip is fed to a swinging arm having grips at each end by which the strip is held under fixed tension. In this position the strip is cut to a predetermined length, in which there is no further trimming, thus obviating waste material. The arm is then swung over the core in position to lay the cord strip at the desired angle over the core. The cord strip is next transferred to laying fingers which carry each end in its path around the core; this path being mechanically regulated, there can be no deviation from it; therefore, each strip occupies the same relative position and the initial tension of the cord has been maintained throughout. Placing the bead then follows, after which the strip ends are brought around the bead toe and under it, the ends presenting a line parallel to the bead toe and heel, midway between them.

Laying the second ply is accomplished in the same manner as the first, the strip ends being laid under the bead heel, abutting the

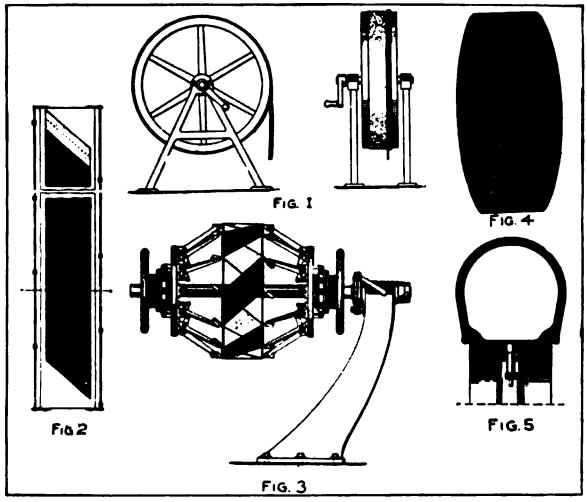

CARLISLE CORD TIRE APPARATUS

ends of the first ply and parallel thereto, thus providing angular locks, under mold pressure, preventing any slippage of the cords whereby the tension is relieved.

APPARATUS FOR MAKING CARLISLE CORD TIRES

A band of composite material consisting of a plurality of rubberized cords is first laid in parallel contact on a sheet of uncured

rubber. The rubber sheet of the correct width and length is applied to the periphery of the drum shown in Fig. 1 and the cord spirally laid on the sheet by revolving the drum.

When the winding is completed the composite band is severed by a bias cut and removed from the drum to the table shown in Fig. 2. Here the ends are trimmed and guide lines marked on the band at the desired angle and correct distance apart by means of a straight-edge and guide pins. The lines indicate the points where the band is to be alternately folded around the bead rings.

The band is then spirally wound upon and between two annular bead rings held in parallel position in the building stand shown in Fig. 3, the band being passed back and forth between, and over and around the rings with the exposed surface of the rubber sheet facing inwardly in the outer layer and outwardly in the inner layer. In the same way, a second band may be applied between the convolutions of the first band, and its interior surface covered by a sheet of rubber stock.

The completed carcass shown in Fig. 4 is then shaped on an air bag as seen in Fig. 5, or an ordinary core and finally completed and cured in the usual manner.

CORD FABRIC MAKING AND COATING MACHINES

Bourdin Weftless Fabric Loom

The method consists in using two parallel warps of threads of indefinite length, each warp having the width of the finished fabric.

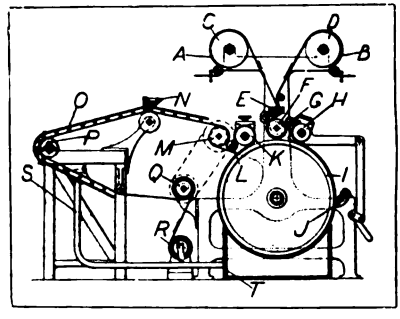

Bourdin Weftless Fabric Loom

but each having a number of threads equal to half the total number of threads in the finished fabric. The threads of each warp are inserted between threads of the other warps, and are all finally united

by the rubberizing process hereafter described. Referring to the drawing, which is a side elevation of the machine, the two half warps *A* and *B*, after passing through vertical combs, which align the threads to the required width, are guided over drying drums *C* and *D*, then downward through the vertical comb *E*, which unites the two half warps in a single layer.

After passing around the roller *F* and between rollers *G* and *H*, where it is impregnated with rubber solution, the fabric is guided over the heated drum *I*, and the spreading device *J* applies a coating of rubber to the front surface. It then passes around the drum, over the water cooled roller *K*, and between rollers *L* and *M* to the spreader *N* which rubberizes the back surface of the fabric.

The fabric, which is now coated on both sides, passes under the steam-heated hood *O*, and around the guide roller *P* to the wind-up roller *Q*, the liner being supplied from roller *R*. The solvent vapors are drawn through pipe *S* by a suction pump to the chamber *T*, into which are also drawn vapors from the drum *I*.

Pye Cord Fabric Machine

By this method cord fabric may be made in lengths greater than can be obtained by cutting standard cord fabrics on the bias. Referring to the drawing, *A* is a cylindrical drum on which a single layer of cord *B*, *B* is wound in close contact. The drum can be of any reasonable diameter so that fabric of great length may be produced. When a layer of cord has been wound on the drum, a coating of

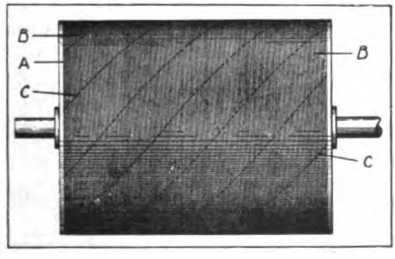

Pye Cord Fabric Machine

rubber solution is applied that serves to hold the threads together. The drum is then revolved at high speed and the layer of fabric cut into spiral bands of the required width, as shown at *C*, *C*.

After cutting, the completed bands, in which the strands lie at an angle of 45 degrees, are removed from the drum and employed in

building cord tire casings in the usual way. While only one layer is shown, it is obvious that two or more layers may be applied to the drum, rubber solutioned and cut in the above described manner.

Seiberling Cord-Fabric Strip Machine

The fabric-forming machine here illustrated produces rubberized cord fabric for tire building by a method which eliminates the losses of economy inherent in the usual well-known methods of cord tire construction.

The machine is of such character that a spool of cord is placed at one point in the machine and in its course through the machine is impregnated with rubber, wound on a mandrel and receives a skim coating of rubber, applied over the cords formed upon the mand-

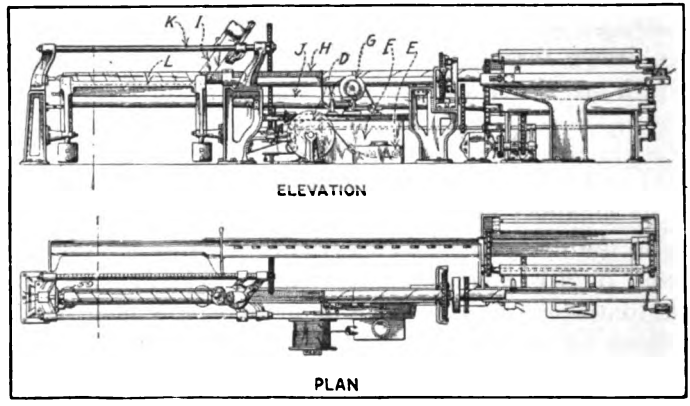

Seiberling Cord-Fabric Strip Machine

rel; then, this covering of rubberized and coated cords is cut on the bias into plies of the width required for building a tire carcass.

The central unit of the machine includes a mandrel driving mechanism, and a cord impregnating, feeding and tensioning mechanism for supplying the cord to the mandrel. A second unit consists of the mandrel collecting and feeding mechanism. The third unit comprises the gum wrapping and stripping mechanism.

In operation, the cord from the spool *D* passes through the cement pot *E*, through the vacuum drying chamber *F*, around the tension *G* to a securing hook on the end of a mandrel *H* which is spirally grooved at a light pitch. The mandrel is rotated and the winding of the rubberized cord upon the mandrel commences. At this time the mandrel loading mechanism is put in operation so that when

the first mandrel is completely wound, another one will be in the proper position to be next covered with the cord.

When the mandrel is nearly wound the free end of a gum strip *I* is attached to the end of the mandrel and the driving mechanism *J* thrown into operation. This causes the screw-threaded rail *K* to revolve slowly, and the gum strip applying mechanism to travel in opposite direction to that of the mandrel. The difference in speed compensates for the width of the gum strip, allowing sufficient lapping to cover the mandrel completely. At the completion of this operation the rotation of the mandrel is stopped and the operator then severs the cord at the junction of the two mandrels, fastening the ends around the securing hooks on the mandrels. The transferring cradle is then rocked, delivering the freshly covered mandrel into the stripping trough *L*. The machine is again started and the operation just described is repeated.

In the stripping trough the mandrel is stripped of its covering by means of a knife inserted into an appropriate groove. The operator slowly revolves the mandrel with one hand and at the same time

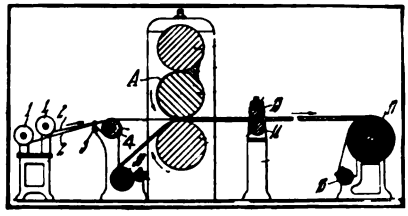

MARQUETTE CORD FABRIC MACHINE

thrusts the knife forward in the groove with his other hand and severs the cords and fabric. He then deposits the severed fabric strip in any suitable stock take-up or rolling table.

MARQUETTE CORD COVERING AND CORD FABRIC MACHINE

Strands of fabric are covered with rubber and strand fabric for making cord tires is produced on this machine by the calender method, and without crushing or distorting the strands.

A series of bobbins *1*, *1*, supply the strands *2*, that are alined by comb *3*, and grooved roller *4*. In passing between the calender rolls, the strands are enclosed, without pressure, between two sheets of rubber, one from the calender roll *A*, and the other from stock roller *10*.

The sheet is thus passed between fluted pressure rollers *13* and *14* that embed the individual strands in the rubber without flattening them, and the completed fabric is then wound up on drum *17* with a liner from drum *18*.

TUBULAR CORD FABRIC MACHINES

Bayne-Subers Tire Casing Machine

This cord fabric making machine is in brief a movable table made up of a wide endless metal band that runs longitudinally over two large drums. Mounted upon this is a movable carriage that runs

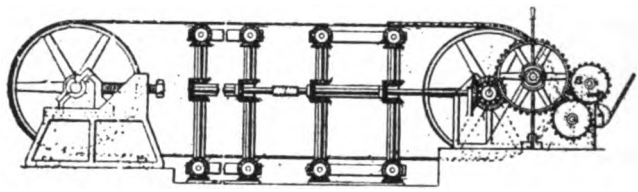

Bayne-Subers Tire Casing Machine

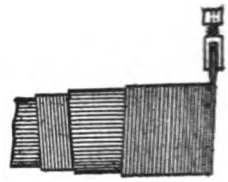

The Tire Fabric

transversely over the band. The second illustration shows the fabric produced by the machine. It is composed of layers of threads, each strand being coated with rubber; the strands being laid parallel so that the rubber surfaces touch and join, and when the longitudinal layer is finished a transverse layer is built upon it, the whole being then vulcanized.

Subers Automatic Tubular Fabric Machine

This is a machine for making unwoven laminated tubular fabric in continuous lengths on horizontal, moving mandrels, from bands of cords previously impregnated with rubber or coated as wound. The fabric is composed of parallel equally spaced bands of cords, in which a series is wound upon the mandrel and alternates with series of similar crossing bands, wound at an angle thereto, and in which all subsequently wound bands are so laid as to cover the spaces between the formerly wound series of bands. The fabric is not woven interlaid, interlocked or braided and but for the adhesion of the rubber would fall apart.

The machine is automatic in operation throughout. The mandrel consists of a series of joined sections continuously supplied, joined and supported to prevent sagging and irregular motion so that a fabric tube of approximately any length may be manufactured.

It moves longitudinally at a predetermined speed and is continuously treated to prevent undue adhesion of the inner lining of rubber which is applied to the mandrel in advance of the bands of cords and the overlapping edges sealed. The bands are then fed from rotatable storing and applying reels, coated with rubber and wound upon the rubber mandrel alternately in opposite directions at predetermined intervals and rates of speed. When bands previously impregnated are used the strips of protecting fabric are automatically removed from the bands as they are fed. One cutting disk revolves transversely about the mandrel at predetermined intervals for cutting the fabric into sections of the desired length and another disk continuously cuts the fabric horizontally upon the mandrel.

MISCELLANEOUS CORD TIRE MACHINERY

Sloper Cord Tire Core

The core shown was designed for use in connection with the Palmer cord-laying machine. From the description of that machine it will be seen that it would be difficult to remove the tire from the core if some means were not provided of withdrawing the pins around which the cords are looped. For this reason the pins are

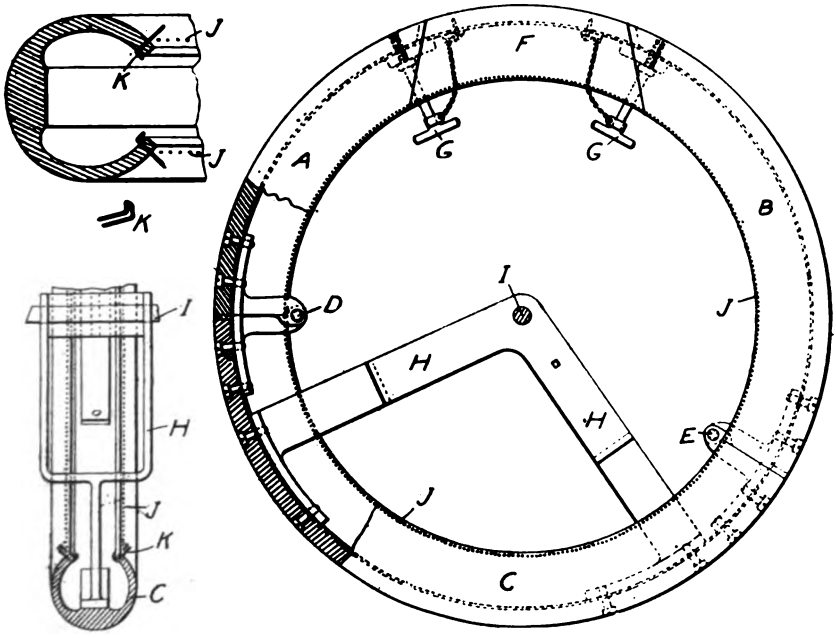

Sloper Cord Tire Core

in the form of wire staples, which are easily withdrawn. The core is built up of sections *A*, *B* and *C*, hinged at *D* and *E*, and with a fourth removable section *F* inserted as shown and attached by means of thumb screw *G*. The segment *C* is provided with radial arms *H* which may be mounted upon a spindle *I* for the purpose of revolving the core in the cord-laying machine. In the sectional views of the core it will be seen that the side walls are perforated near their edges with two series of small holes *J* to receive wire staples *K*. Each staple is bent at its looped end into a right angle and the staples fit loosely in the holes so that they may be inserted in either direction. The cords are looped around the ends of the staples as explained in the description of the Palmer cord tire machine. After the tire is completed and vulcanized the staples are withdrawn and the core is collapsed so that the tire is easily removed.

Sloper Improved Cord Tire Core

A collapsible shaped "former" is screwed on a spider by means of thumb screws. Side rings are secured in position by the engagement of pivoted levers in cam slots formed in lugs on the rings. The pins or staples on which the cord is wound to form the tire fabric, are held in detachable side rings by means of spring-pressed balls.

Hubbard Cord Measuring Device

This is a timing device to measure the amount of thread to be supplied to a machine for winding tire carcasses. To the spindle of the roller of the machine is attached a spur wheel rotating with the roller. Engaging with this spur wheel is another carrying a spindle attached to which is a cord. This cord, led over pulleys, is at its other extremity wound round and attached to a bobbin, which is mounted either on the bed of the machine or on a belt shifter. As the machine works, the roller revolves until the whole of the cord on the bobbin has been unwound, when the bobbin pulls over the belt shifter and stops the machine.

Stowe Core and Anchorage for Cords of Cord Tires

This invention relates to the true cord tire in which the parallel cords comprising the carcass are laid over the core at an angle and anchored at the beads. In the illustration, *A* is the core with an internal rib to each side of which two angle-shaped rings *B*, *B*, are bolted. Screws *C*, *C*, serve to hold in place the two segmented rings *D*, *D*, that are provided with cord locating pins *E*, *E*. Two helical, endless wire coils *F*, *F*, having one-half the number of convolutions

as there are pins on each side of the core, are located just within the pins by any temporary means.

When the coils of wire have been fixed in position, one end of the cord is anchored in any suitable way and the cord is first doubled upon itself and the bight slipped over one of the convolutions of the wire. The cord is again looped or doubled upon itself and the bight

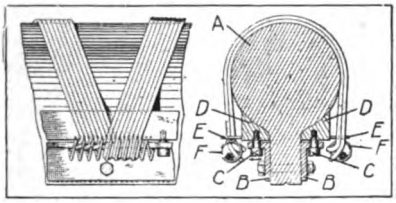

STOWE CORE AND CORD ANCHORAGE

placed over a convolution of the opposite wire coil. When the cord is pulled tightly about the core the bights will be slightly separated and drawn upward on the inside of the coils.

When the inner layer of cords has been placed in position on the core, the last run will come into position near the first end which was temporarily anchored in position. The two ends may then be tied together, or the same cord continued without cutting so that the second layer of cords is formed in a manner similar to the first except that the angle at which the cords are laid is exactly opposite to that of the first layer.

TEW CORD TIRE CARCASS FORM

This device comprises a rotatable, drum-like collapsible form having a substantially cylindrical surface with rounded and inwardly extending edges. On this a tire carcass is built up with bias strips of an unwoven fabric formed of parallel rubberied cords held together by adhesive and applied without stretching. The width of the strip is sufficient to reach laterally from bead to bead, and its length sufficient to reach circumferentially about the tire carcass, one bias end coming contiguous to the other bias end. Extensible beads are then applied to the outer edges of the strip where it overhangs the edges of the drum, adhesion of the rubber securing the bead in place. An intermediate layer of rubber is next added, and then a second ply of corded fabric, with the cords extending at substantially right angles to the first ply. This second ply extends on to the outside of the applied bead and is then lapped beneath it.

The form is now collapsed, the tire carcass removed and placed, with an air tube inside of it, within a rim similar to the wheel rim on which it will eventually be used. The tube is now inflated and the carcass thus caused to assume the arched form which it is to have in the finished tire. Then the breaker strip, tread and side strips are applied and the tire vulcanized in any approved manner.

CHAPTER XXIII

VULCANIZERS AND PRESSES

FOR curing the pneumatic tire casing there are several different types of vulcanizers. Of these the most important are press vulcanizers for curing tires in molds, more particularly hydraulic ram heater presses, some of them especially designed for use with expansible cores and internal pressure molds.

The advantage of the hydraulic ram heater press is that it assures a constant and proper closure of the molds without requiring the bolting together of individual mold parts as in the case of hori-

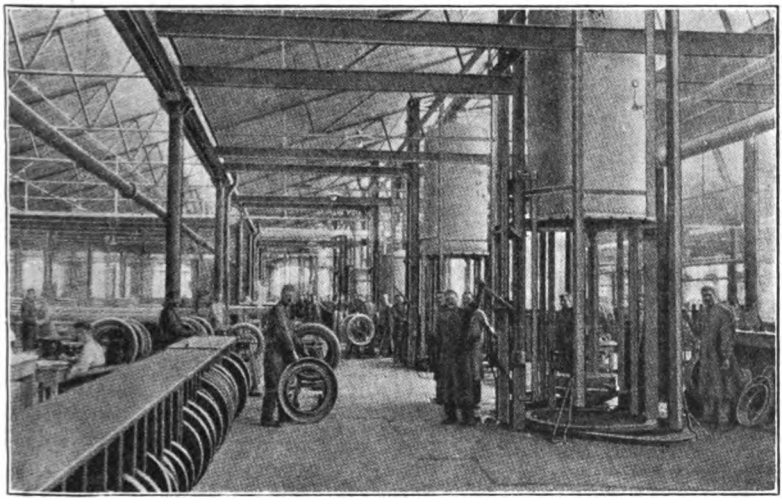

PRESS VULCANIZER ROOM IN A EUROPEAN TIRE FACTORY

zontal or vertical vulcanizers of the bolted-on head type. Of these hydraulic ram vulcanizing presses there are two principal kinds. The more common hydraulic steam heater presses are designed for vulcanizing tires in molds with steam circulation all about the molds with a closed steam chamber, whereas the open hydraulic steam platen presses apply heat only at the top and bottom of each mold. There are a few hydraulic molding and vulcanizing presses for single tires with mold forming platens chambered for steam, also tread band vulcanizing presses and molds for semi-curing endless retreading bands, and small

presses for patching slight defects in non-skid treads. Other miscellaneous presses are used for molding the casing, stretching the fabric carcass, effecting greater adhesion between the layers of fabric and rubber, closing vulcanizing molds, and drawing together the air bag rings used in curing cord tires.

Horizontal vulcanizers are used for curing wrapped tires in open steam and also molded tires in bolted molds. Quick operating doors have greatly facilitated the use of this type of vulcanizer.

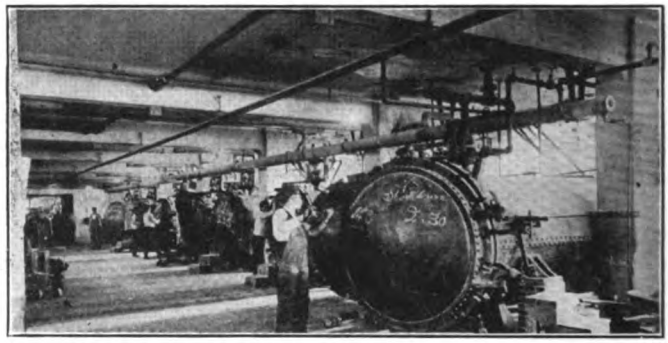

VULCANIZERS, WHERE TIRES RECEIVE FINAL CURE

To control vulcanization conditions during the cure there are numerous temperature and steam pressure regulators and recorders applicable to both the press and horizontal type of vulcanizers.

SHAW HEATER PRESS

This vertical vulcanizing press is adapted for vulcanizing all sorts of rubber goods which require pressure in a mold during the curing process, and especially for curing tires. Referring to the drawing, which shows a vertical sectional view of the press with a series of molds between the ram and the cover, *A* represents the vulcanizer body which is supported by brackets *B* on suitable beams or masonry at the level of the factory floor so that the lower portion of the vulcanizer and the plunger enters a pit in the floor. Any desired number of these presses may be located in a room underneath a traveling hoist, which may be used to lift the molds from the press. The hydraulic ram comprises a piston *C* fitted to slide in the cylinder *D* and bearing a skeletoned head *E*, through which steam for vulcanizing and water for cooling may have free circulation. The press cover *F* has a flange *G* to which is fixed a series of wedge blocks adapted to lock underneath a corresponding series of wedges fixed to the steel

ring *H* bolted to the top of the vulcanizer body. These wedges are so spaced that when the cover is placed on the press and given a slight horizontal turn by means of bars placed in the holes I, the cover will be securely locked in position. The cover is provided with

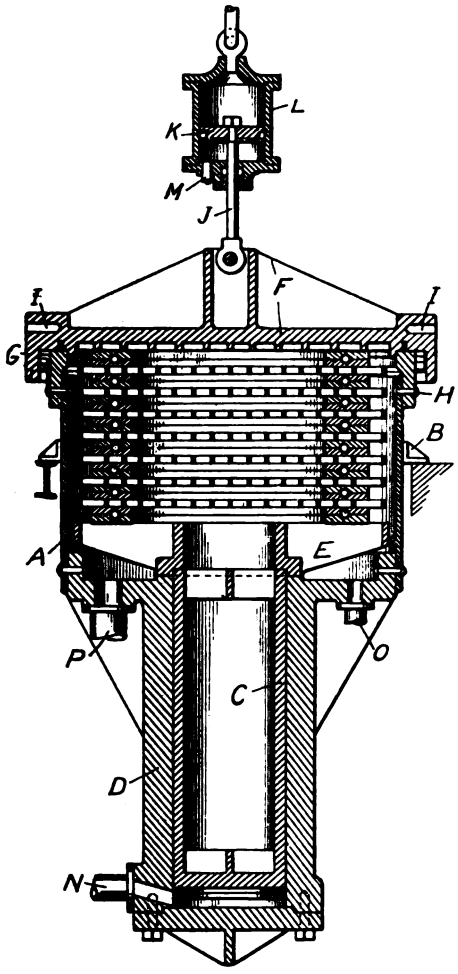

SHAW HEATER PRESS

a number of projections on its under surface, which allows a free circulation of steam over the top mold. Also, between each pair of molds is placed a grating to keep the molds separated in order that sufficient space may be allowed for the admittance of steam.

To provide a quick and convenient method of raising and lowering the cover, the latter is suspended from a piston rod *J* of the piston *K*, which is enclosed in the hydraulic cylinder *L*. This cylinder is suspended from the crane by which the cover may be swung away from the press after being raised by the action of the hydraulic cylinder. The operating medium is admitted to the cylinder through a flexible hose attached to the pipe *M*. A pipe *N* admits water to and permits the escape of it from the press cylinder for operating the ram. Another pipe *O* admits steam to the press body and a third pipe *P* is used for the supply and discharge of water for cooling the molds. The press is also fitted with the usual steam gage and thermometer.

When it is desired to place articles in the press for vulcanization, the molds are filled and hoisted on the head of the ram, which is raised to the top of the body *A*. Water is then allowed to escape from the pipe *N* and the molds are lowered into the body so that the cover *F* may be swung into position and locked. Steam is then admitted and the correct vulcanizing temperature maintained until the goods are cured. Water is then passed around the molds to cool them, after which the cover is removed and the molds raised out of the press by the action of the plunger.

Shaw Double-Ram Heater Press

This press is so constructed that the two hydraulic rams of a compound press exert pressures in opposite directions, holding the press cover closed by one ram and pressing the tire molds together between the other ram and the press cover. The main press cylinder *A* has a flange at the top, to which is bolted the lower end of the vulcanizer cylinder *B*. At the top of this cylinder is a bolted-on flange, against which rests the cover *C*. A packing ring is provided between the cover and flange to make a steam tight joint. The press being several feet in height, the body is provided with brackets *D* at the floor line to support it. This allows the upper end to be placed at a convenient height above the floor while that part below the brackets is suspended in a deep pit. Inside the cylinder *A* is a hollow ram *E* provided with a flange head *F*. To this head are attached the four columns of heavy bolts *G*, which also support the cover *C*. In the lower end of the ram *E* is a vertical post *H* which supports the inner ram *I* when the latter is in its lowest position. An important feature of this press is the method of supporting the iron trays, between which the tire molds are placed. Referring to the side and top views of the group of molds and trays, it will be seen that the trays *J* are provided with

pins which rest upon shoulders on the supports *K*. When the plunger *I* is raised the trays rest upon the shoulders of those supports, which are so spaced that the molds may be slipped out from between the trays without removing the latter from the press. By means of this

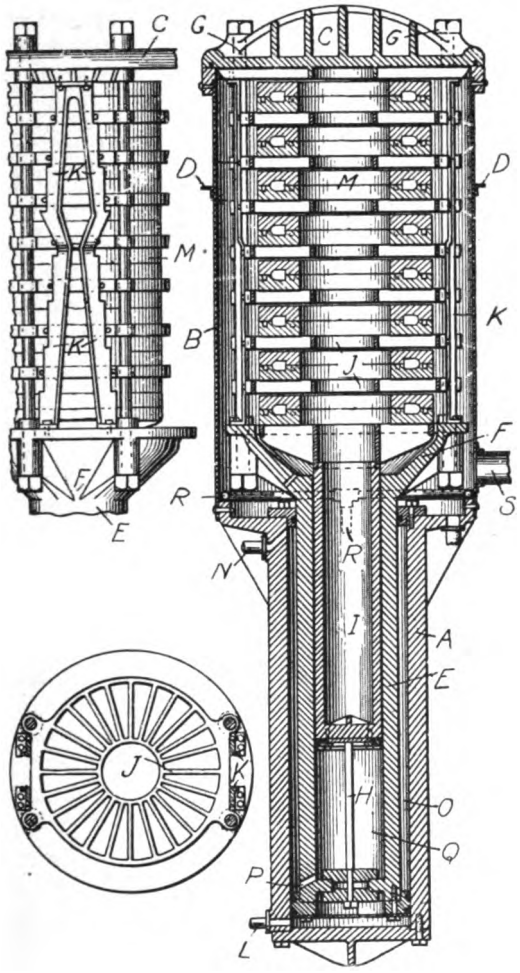

SHAW DOUBLE-RAM HEATER PRESS

construction, any number of tires, from one to full capacity of the press, may be vulcanized.

The operation of the apparatus may be summarized as follows: The two rams *E* and *I* are raised together by admitting water under

pressure through the pipe *L*. This raises the four columns *G*, the covers *C*, the trays *J*. The molds *M* are then placed between the trays as the plunger *E* is lowered step by step. When the molds are all in position water is admitted through the pipe *N* to the space *O* and thence by a passage *P* to the space *Q*. The pressure of the water in this space forces the main ram *E* downward, thereby holding the press cover *C* against the packing at the top of the vulcanizer body. At the same time the same pressure forces up the inner ram *I*, thereby raising the trays *J* from the shoulders of the support *K* and squeezing the tire molds tightly between the trays. Vulcanization is then effected by steam admitted through a pipe *R*. The trays *J* and the underside of the cover *C* are skeletoned to allow the passage of steam around the molds. The water pressure holding the main ram down counteracts the pressure forcing the inner ram upward, and hence there are no heavy strains on the walls of the vulcanizer body *B*, which may be made of lighter material than usual. After vulcanization the steam is shut off and water is admitted through the pipe *S* to flood and quickly cool the molds.

Decauville Heater Press

The Decauville press combines a heating chamber with a hydraulic press, the platform of the press moving inside the vulcanizer cylinder. The vulcanizer cylinder *A* rests, through the intermediary of elastic washers *B* to allow for expansion, on small hydraulic rams *C* in cylinders *R*. The plates *D* and *E* of the press are connected by rods *R*, which serve as guides for the cylinder *A*. The bottom of the vulcanizer cylinder is provided with a stuffing box, through which passes the piston *G* of the hydraulic press. At the beginning of the operation the cylinder *A* is in its lowest position on the rams *C*, while the platform *H* is in its highest position for placing the tire molds thereon. This platform is lowered step by step as each mold is placed on it.

When the load is complete the cylinder *A* is raised by means of the plungers *C*, so that the plate *E* is pressed up against the plate *D*. The bolts *K* are then fastened in position and the piston *G* is operated to raise the platform *H* and thus press the molds firmly together. Steam is then admitted through the inlet *L* to cure the tires. After vulcanization the platform *H* is lowered slightly, the bolts are loosened, the cylinder *A* is lowered and the platform *H* is raised to remove the molds. On account of the height of the apparatus the cylinder is set in a pit, *M*, several feet deep, so that the line of the bolts *K* comes at a convenient height above the floor line *N*.

Farrel Heater Press

The Farrel press is designed to accommodate from eight to sixteen molds at each operation. This press has a heavy cast-iron base with four 4-inch steel columns and a center opening for the main hydraulic ram. At the top of the four steel columns is a heavily ribbed top plate faced off on the under side. The main ram, which is 12 inches in diameter, extends through the bed plate and below the base into a pit. On top of the ram is the platform for carrying the tire

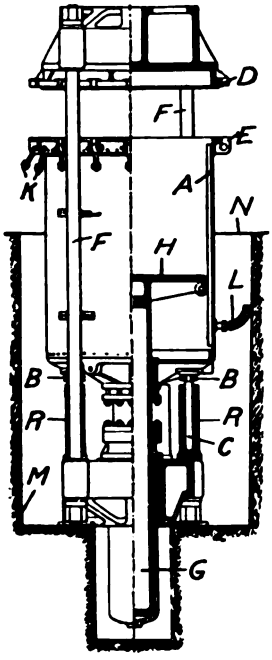

Decauville Press

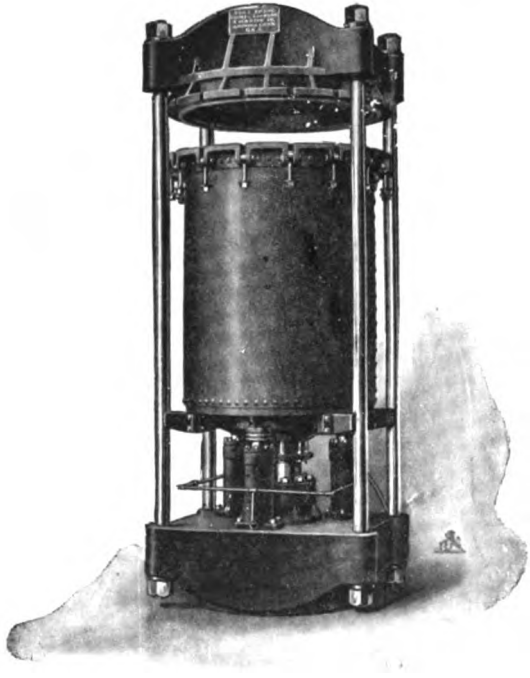

Farrell Heater Press

molds inside the vulcanizing chamber. The latter is dropped to permit the removal of the molds after vulcanization and the introduction of new molds. This movement of the shell is controlled by means of the three 5-inch hydraulic rams shown underneath it. A water pipe connects the three small hydraulic cylinders so that a single valve operates the three rams simultaneously. Another valve is employed for operating the 12-inch ram.

The operation of the press is as follows: Assuming that the steam chamber is open and the platform of the main ram is raised, a mold

is placed on the platform; the latter is lowered a distance equal to the thickness of the mold, and another mold is placed on top of the first. This is continued until all of the molds are stacked on the platform. Pressure is then applied to the three small rams, raising the steam chamber against the top plate. The hinged bolts are then clamped in place. Pressure is now admitted to the 12-inch hydraulic cylinder, elevating the mold platform until the top mold is pressed against the top plate. The large ram is capable of exerting a pressure of about 2000 pounds per square inch, while the small rams operate under a pressure of about 200 pounds per square inch. After the molds are subjected to pressure, steam is turned into the vulcanizing chamber. When vulcanization is complete a relief valve is opened and cooling

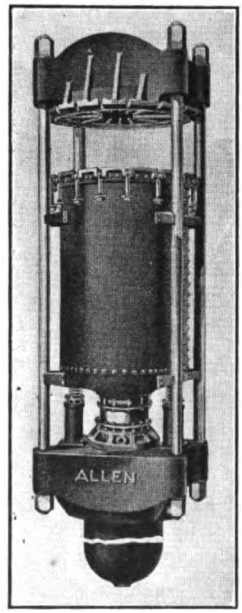

ALLEN HEATER PRESS

water is turned into the steam chamber. After cooling, the water is drawn off, the top plate unbolted, the rams are lowered, the platform is raised and the molds are removed one by one.

ALLEN HEATER PRESS

The barrel of the Allen press is dropped after vulcanization, as shown in the illustration, to allow removal of the molds and the intro-

duction of new molds. Three small hydraulic rams at the base of the shell control this movement. As these rams are raised the shell is lifted and forced against the head. The hinged bolts are then fastened

ALLEN QUICK OPENING PRESS

into the head ring and the press is ready for the steam. No special packing is required, as the main seal is made on a common square rubber packing. The pistons are outside packed.

ALLEN QUICK OPENING HEATER PRESS

The quick opening lid of this outside packed press is quickly locked and unlocked by a partial turn of the locking ring, thus effecting a considerable saving of time for every cure.

AKRON-WILLIAMS HEATER PRESS

To a base plate, in the center of which is an hydraulic ram, is riveted the vulcanizing chamber, the base plate forming the lower head of the chamber. To the upper end of this vulcanizing chamber is riveted a cast steel ring having a series of projecting lugs. The lid or upper head of the vulcanizer also has a series of lugs and the construction is such that the lid can be dropped into a recess in the top

ring of the vulcanizer, and by giving the lid a slight turn it is locked in place. An automatic rubber packing ring is fitted into a recess in the lower face of the lid to make it steam tight when closed.

To the upper end of the ram piston is attached a platform or mold table which is raised and lowered by the ram. In action the molds are pressed between the mold table and the press lid, each mold receiving the same pressure during the cure.

Over the press is a trolley track, and on either side tables set at the same height from the floor as the rim of the vulcanizer. One table

A.-W. Heater Press

A.-W. Improved Press

is for filled molds ready to be cured, the other for the molds after they have been taken from the vulcanizer. The molds are handled by a hoist suspended from the overhead trolley track.

The lid is given a part turn to free it from the retaining lugs, then raised by hydraulic ram, hooked to the overhead trolley and

pushed out of the way. This leaves the vulcanizer chamber open. Next, the hydraulic ram is lowered until the mold platform is level with the top of the vulcanizing chamber and mold tables. A mold is placed on the ram cap or mold platform, which is then lowered until the top of the first mold is level with the tables. Another mold is placed on top of the first mold and so on, until the vulcanizing chamber is filled. The lid is then placed back over the opening, the ram is raised until the top mold reaches the head, the head is unhooked from the overhead trolley, the lid carried down to its seat and locked by a slight turn.

Hydraulic pressure is now applied to the ram and molds. Steam is admitted to the vulcanizing chamber, a valve in the lid being kept open until the air is driven out. As the pressure increases the head joint is sealed tight by the automatic packing.

When vulcanization has been completed, the steam is shut off and cooling water turned into the vulcanizing chamber through an opening in the bottom, until it begins to flow out of the relief valve in the top. The cooling water is then drawn off, the lid opened and carried out of the way by the overhead trolley. The ram is raised until the top mold is level with the press rim and mold track, when the mold is moved on to the table for cured tires and carried to its far end. The ram is again raised to bring up the next mold to the level of the table and is taken off as before, and so on, until the press is empty.

Improved Akron-Williams Heater Press

Unusually long ram bearings insure that this press will exert pressure at right angles to the press lid, between which and the ram cap and the molds are pressed during vulcanization. Even a slight amount of play in these bearings would permit the ram to slant considerably when fully extended, and might leave the molds open a little on one side or the other. There are two separate packing glands which are proof against leakage of both water and steam, preventing cold water from entering the vulcanizing chamber, obviating side play and keeping the ram in perfect alignment. These glands are located beneath rather than in the bottom of the vulcanizing chamber, and are readily accessible for inspection or repair at all times, even while the press is in operation.

Gammeter Single Ram Heater Press

The Gammeter hydraulic tire vulcanizing press is designed to simplify the process ordinarily employed. In this press a single hydraulic ram performs the several operations. *A* is the casing of the vulcan-

izer which is attached to the flanged ring *B* and rests upon the base plate *C* which supports the press. The cylinder *D* of the hydraulic ram rests upon the flanged portion of the ring *B*. A plunger, *E*, works in the cylinder *D* and is provided at its upper end with an en-

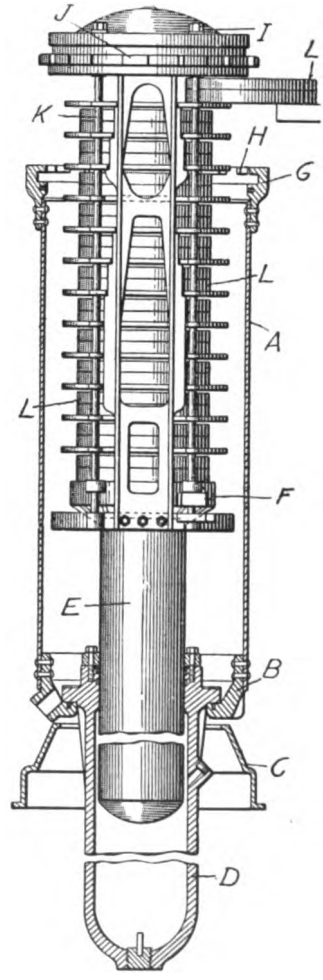

GAMMETER PRESS

larged head, *F*. The upper end of the casing *A* has secured to it a ring *G* having in its inner face a series of inwardly projecting lugs *H*. The cover *I* is provided with a series of lugs *J* adapted to pass between the lugs *H* when the cover is applied or removed, thus providing a means of quickly locking or unlocking the vulcanizer. De-

pending from the cover *I* is a frame comprising four rods K, adapted to support the molds *L*. This frame also serves to lift the cover. In order that the ram may be free at proper times to compress the molds between the plunger head and cover, and at other times utilized to remove the cover and lift the molds from the vulcanizing chamber, means are provided for separately connecting the plunger head *F* with the cover and mold carrying frame, so that when the cover is free from its interior lugs the molds may be brought one by one to a level with the loading and unloading table. In locking the cover *I*, however, the action of turning the lugs *H* and *J* into locking position, unlocks the plunger head *F* from the rods *K*. Thus, when pressure is applied to lift the ram, the molds are compressed.

Beer Quick-Acting Heater Press

Instead of the usual four steel columns, this press has two columns *A*, at the rear, and a single column *B*, at the front. It has two cylinders *C* and *D*, each of which is provided with gibs arranged to slide vertically on a guide attached to the column *B*. The cylinders may be swung around this column as a pivot, and may be raised or lowered by means of a piston *E* operating in a hydraulic cylinder *F*.

The articles to be vulcanized are placed in molds stacked upon a plate *G* on a truck *H*. The truck is then run under the cylinder *D*, which is open at the bottom and raised as shown. This cylinder is lowered over the molds by means of the piston *E*, and the plate *G* is clamped to it. The cylinder *C* in the press is relieved from steam and hydraulic pressure, and both cylinders are then swung around the column *B* until cylinder *D* is brought into position in the press, and cylinder *C* is directly over the truck. The molds containing the vulcanized goods are then released by unclamping the plate *G*, and the empty cylinder is then raised by means of the piston *E*. While this is being done the press is operated to compress the molds, and to press the cylinder against the head *I* of the press. In order to press the molds against the head, only a short movement is employed. It has two eccentric movable rings which have wedge-shaped protections arranged so that the piston may be locked in its raised position. This circular hydraulic press operates independently of the main ram *K*. The advantage claimed for this press is that it can be charged and emptied simultaneously, thus reducing labor and economizing time. Also the ram and cylinder of the main press can be made shorter than usual, since the press operates only to compress the molds.

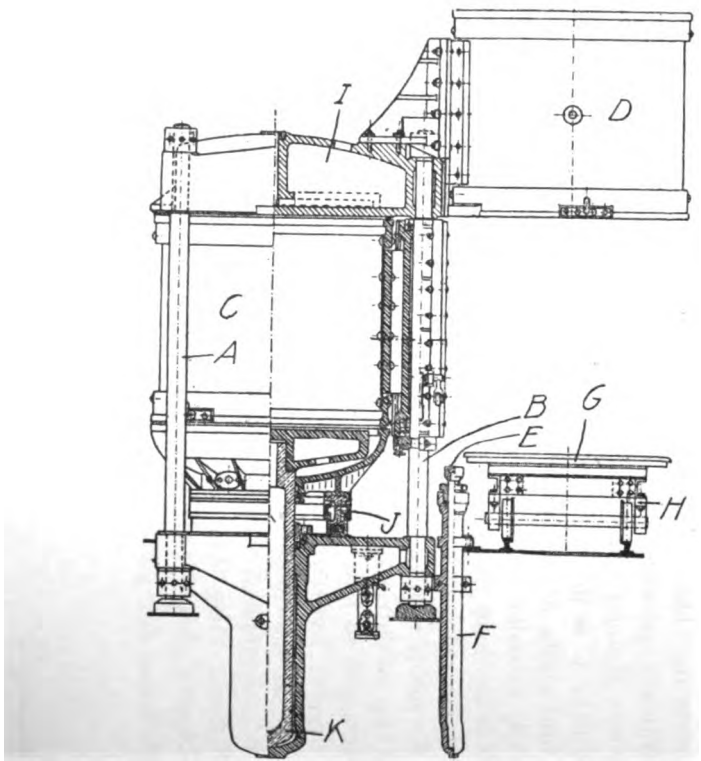

BEER QUICK-ACTING HEATER PRESS

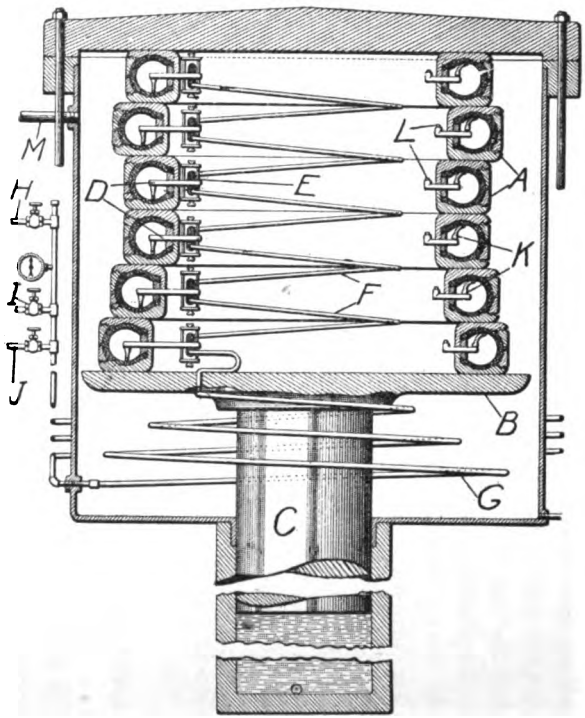

DEES PRESS FOR INTERNAL PRESSURE MOLDS

Dees Heater Press for Internal Pressure Molds

The tires are placed in molds *A*, which are laid one above the other on the table *B* mounted on the hydraulic ram *C*. Each mold has a pipe *I* running from the interior of the tire to a valve *E*. These valves are all connected by flexible pipes *F* communicating with the outside of the vulcanizer through a flexible pipe *G*, having three valves *H*, *I* and *J*. Each mold also has a tube *K* with a valve *L*.

When the molds are in place and compressed by raising the hydraulic plunger *C*, the valve *H* is opened and cold water is let into the tires until they are filled, when it runs out through the tubes *K*, closing the valves *L*. The valve *H* is then closed and steam is admitted to the vulcanizer through the pipe *M*. As the water inside the tire becomes warm by the heating of the molds, it expands and exerts an outward pressure on the tires. At the proper time the valve *J* is opened and the pressure of the steam opens the valves *L*, forcing the water out of the tires and filling them with steam. The valve *J* is then closed and the steam valve *I* opened, producing a pressure in the tire greater than in the surrounding vulcanizer. This pressure is maintained until the curing process is complete.

Dees Heater Press for Expansible Cores

In this heater pressure is applied to the inner surface of the tire casing during vulcanization. It is a combination of vulcanizer press, mold and collapsible and expansible core.

The casing is built up on the core and enclosed in the mold *I*, which is then transferred to the vulcanizer press. The center block *J* is located on the auxiliary piston *E* and the four spring arms *K* inserted.

A second mold, containing a tire, is then placed on top of the first mold and a second block is located on the first and the spring arms inserted. This process is repeated until the heater is full. The head is then locked in place, pressure applied to the molds by the main ram *B* and live steam is admitted to the heater *H*. Pressure is then applied to the auxiliary piston *E* which raises the center blocks *J* spreading the spring arms *K* radially. This expands the core, stretches the fabric and shapes the tire and tread against the inner walls of the molds *I*.

Adamson Heater Press

The Adamson press has two bearings or stuffing boxes *E* and *F* for the ram *B* and outside openings *G* through which adjustments are made.

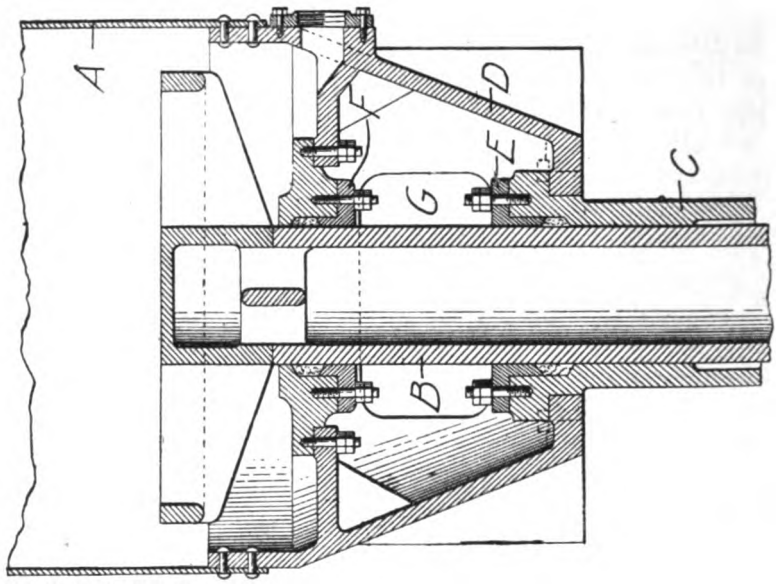

ADAMSON HEATER PRESS

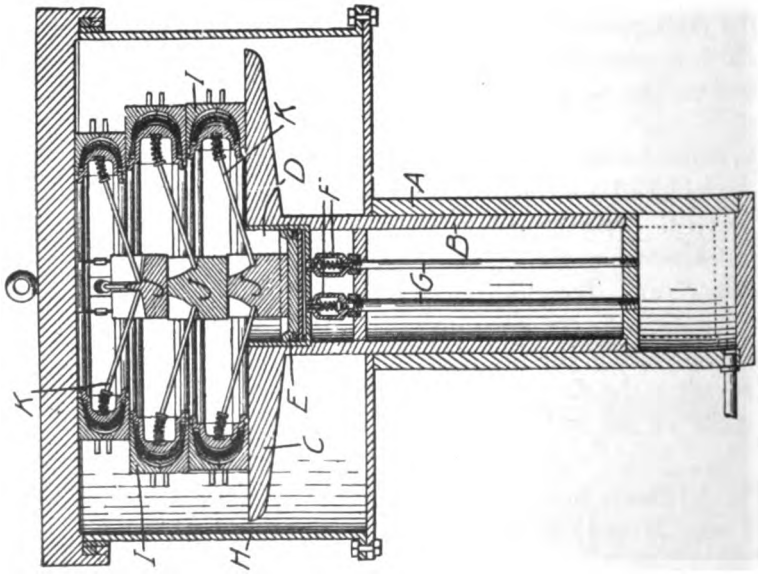

DEES HEATER PRESS FOR EXPANSIBLE CORES

The vulcanizer base *D* is an outwardly flaring casing terminating in a flange to which the vulcanizer shell *A* is riveted. The lower contracted end is formed into a horizontal flange bored to receive the ram cylinder *C*. The upper end of the cylinder is flanged and supports the lower packing gland *E*. Formed integral with the vulcanizer base *D* is a horizontal partition to which is bolted a ring bored to fit the ram. To the under side of this ring is bolted the upper packing gland *F*. The flaring wall of the base *D* is provided on opposite sides with openings *G* through which access may be had to the nuts of the bolts fastening the packing glands as well as those of the ring.

Welton Heater Press

This press has two rams and cylinders which are bolted to opposite sides of a vertical vulcanizer shell. The upper ends of the rams are attached to a ring-shaped cross head, which has two hooks on the under side for engaging and lifting the vulcanizer door. Two rods attached to the cross heads pass through stuffing boxes in the door and support on their lower ends a floating platen within the shell. The outside rams and cross-head hooks engage and raise the cover while the rods raise the platen. The heater is then filled with molds and the door locked. The rams are raised and the rolls and platen pull the molds up against the cover.

McLeod Heater Press for Internal Pressure Molds

The invention illustrated comprises a live steam chamber, a hydraulic press and tire molds with connections, so that water under pressure is admitted to the interior of the tire casing during vulcanization. A tire *A* is placed in the mold *B* with the annular ring *C* between its edges, forming a tight joint. Through this ring extends a valve *D* which automatically discharges water or admits steam to the interior of the tire. The ring also supports a nozzle *E* that delivers water under pressure to the interior of the tire. The mold is then placed on the ram platen and connected to the water inlet *F* and the succeeding molds are stacked and connected together by flexible pipes and couplings *H*. The press is then closed and pressure applied to the molds. Water under pressure is admitted to the interior of the tires, stretching the fabric, while the air is discharged through the automatic valve. Live steam is turned into the press chamber. This heats the water in the molds, and the tire is then cured both inside and out. When the cure is complete steam from the molds is exhausted at the outlet pipe assisted by the steam pressure in the heater acting through the automatic valve.

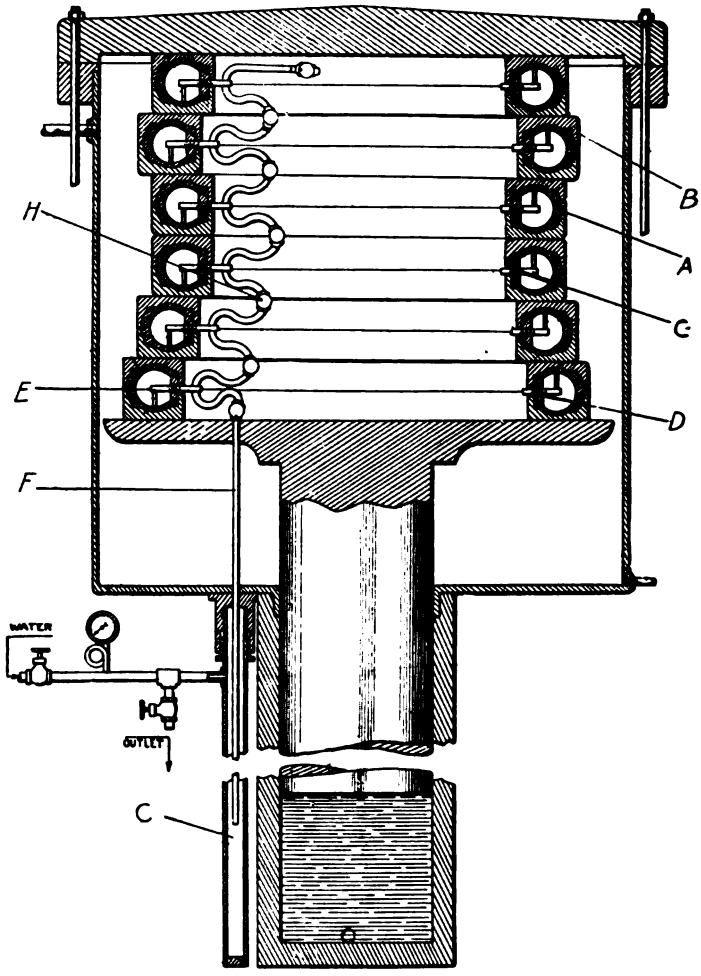

McLeod Press for Internal Pressure Molds

In another patent the molds are first filled and water applied under pressure to the interior of the tire. They are then suspended from a track in a horizontal vulcanizer, and connected by flexible hose and couplings to a manifold in the same manner as just described.

Nuttall-Bridge Ramless Heater Press

The usual hydraulic ram and cylinder are done away with in this heater press. The steam chamber *A* contains a piston *D* suitably packed and fitted, upon which the molds are placed, and the piston

is operated by hydraulic pressure. Thus the vulcanizer serves the double purpose of a ram cylinder and a vulcanizing chamber, and the upper cover *B* is raised and lowered by two small rams *C, C*. Water is admitted to the lower side of the piston *D* through a pipe *E*, and

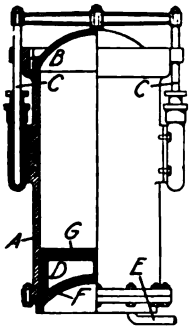

NUTTALL-BRIDGE PRESS

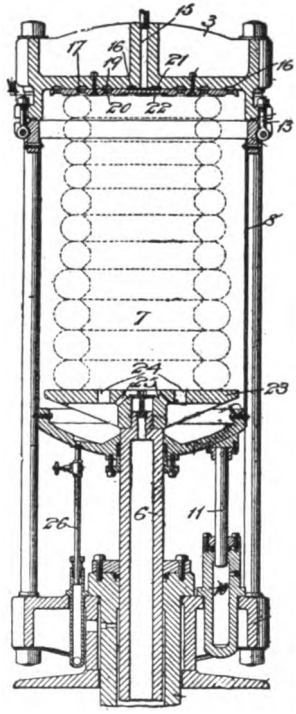

THROPP HEATER PRESS

in its lowest position the piston is supported by a flange *F*. To reduce condensation, the upper part of the piston is covered with metal and asbestos sheets.

THROPP HEATER PRESS

This press is of the well-known vertical type. The following description of the operation of its vulcanizer will explain its novel features.

Assuming the chamber *8* and platen *23* to be in their lowered position, the molds are stacked on the platen, and the stack is compressed against the head plate *17* by the ram *6*. The auxiliary ram *11* is then put in operation, closing the chamber *8* against the head *3*, where it is locked by the bolts *13*. The steam, introduced through

the inlet *13*, impinges against the circular depression *21* in the plate *17*, and is forced to travel therefrom through the grooves *16* and *19* to the outer portion of the head *3*, and hence to the outer portion of the chamber *8*. Upon reaching the outer portion the steam passes down around the stack of tires *7*, engaging the outer portions. When it reaches the bottom of the chamber *8* it is permitted to pass up through the holes *24* and *25* in the support *23*, and thus come in contact with the inner portion of the stack of tires. Upon reaching the top of the vulcanizer it will again pass outwardly by way of the depression *22* and grooves 20, coming in contact a second time with the outer surfaces of the molds.

It will be seen that as long as the steam is admitted to the vulcanizer it will continue this cycle, thereby following a free and uniform circulation, and giving a uniform cure to the tires. The grooves *16*, which are not in communication with the inlet *15*, serve as additional channels of circulation during the curing period. When the cure is complete, the steam is let off through the blow-out *26*, the support *23* and cylinder *8* depressed, and the tires removed.

Southwark Heater Presses

The Southwark is an outside packed press with six outside tension rods to receive all the stress created by the hydraulic ram, so that the tank is subject only to the steam pressure. Since the tension rods allow free expansion and contraction of the shelf, no injury results from sudden chilling, and the rivets are never loosened. Perfect alignment is readily obtained by adjusting the nuts on the tension rods. The outside hydraulic ram packing prevents flooding of the heater during the cure, as it is independent of the steam ram packing. The stroke of the ram is arranged so that the table will be lifted flush with the top of the heater to facilitate sliding out the molds over the top of the press. A quick opening and closing head is provided that is operated by turning a latch ring by means of a small hand lever and rack. This ring is easily removed, and in case the cover should stick, the bolts that tie the two openings of the lock together may be loosened and the strain relieved. Placing the confined rubber packing around the periphery prevents the cover from twisting the packing and pulling it out of place. This press is designed for a steam pressure of 100 pounds and a water pressure of 500 to 1,500 pounds, in sizes having ram diameters ranging from 12 to 30 inches, a stroke of 8 to 12 feet, and with a steam chamber having clear interior diameters of 30 to 72 inches.

SOUTHWARK HEATER PRESS

There are also inside packed Southwark tire heater presses in which the shells are made heavier to take the strain from the rams. They are designed for 100 pounds steam pressure, and the standard size is 48 inches by 12 feet with a 12-inch ram for 1,500 pounds pressure. A larger size is 56 inches by 14 feet, with a 30-inch ram for 3,000 pounds pressure and a capacity of 1,000 tons.

LAURITZEN HEATER PRESS

The object of this invention is to enable the use of a hydraulic ram with a very short stroke. Supposing the ram cap *A* to occupy

the position shown in full lines and the space between it and the pressure flanges *B* of the cover to be filled with superposed molds, it is only necessary to impart a very slight vertical movement to the ram piston to apply the requisite pressure to the molds.

It is necessary, however, that the ram cap shall be capable of being raised to the top of the press tank in loading and unloading the molds. To elevate the ram cap without the use of the ram, a mold carrier *C* is provided, consisting of a plate-like member having an open center and strengthening ribs, which member engages or pro-

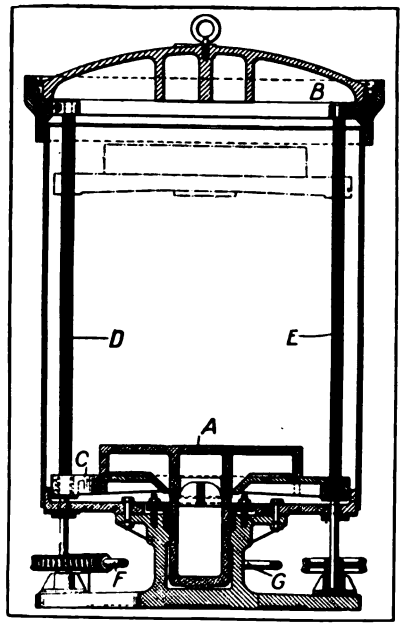

LAURITZEN HEATER PRESS

jects beneath the edges of the ram cap, so that when the carrier is moved vertically the ram cap will be elevated from the ram piston.

This is accomplished by four vertical screw rods, only *D* and *E* being shown, having their upper ends journaled in bearings carried at the top of the press tank, and projecting at their lower ends through stuffing boxes in the tank bottom, their lower ends being stepped in bearings, these rods engaging split-threaded bushings secured in openings in the carrier. The projecting portions carry worm gears which mesh with worms keyed on two parallel shafts *F* and *G* driven by sprocket chains and spur gearing from a motor.

Akron Heater Press

This compact design comprises a tire vulcanizer, mold press, mold elevator and cooling tank. The head is of the boltless quick-opening type. The lid and upper shell ring have a series of projecting lugs. The lid is revolved a fraction of a turn by means of an iron bar inserted in one of the slots cast on the lid. This places the lugs on the lid directly under the corresponding set of lugs on the upper shell ring, and makes it impossible for the door to be forced upward. Steam may then be turned into the vulcanizer and as soon as there are three to five pounds' pressure the automatic flap packing in the upper shell ring seals the joint. The cylinder of the vulcanizer is provided with an extra long throat, and the bearing between the ram and the throat of the cylinder is also made extra long. This latter provision ensures the ram always bringing its pressure to bear at right angles to the ram cap and press lid between which the molds are pressed during the process of curing. The ram packing can readily be renewed without taking the ram from the cylinder. Two structural steel tables for molds are provided, one for cured molds and another for molds containing raw tires. A U-shaped trolley track passes over these tables and the press is under the curve of the U. The height of the tables above the floor is the same as that of the vulcanizer. When the cure is complete the steam is blown off, cooling water is admitted and the press is ready for unloading.

MOLDING AND VULCANIZING PRESSES

Vincent Vulcanizing Press

The essential feature of the Vincent press is the hydraulic operation of a resilient core or stretching plate during the process of vulcanization. The drawings show a vertical section through the press and two plan views of the mechanism for stretching or contracting the resilient core. *A* and *B* are the upper and lower mold sections in which the tire is vulcanized. *C* is a sectional core which supports the tire and expands it against the molds. A series of spiral springs *D* mounted on the plungers *E* of hydraulic cylinders *F*, serve to counteract any disarrangement of the tire when the molds are closing. The springs also assist in separating the molds after vulcanization. The expansion and contraction of the core *C* is effected by means of an independent hydraulic cylinder *G* attached to the bed plate of the press. By means of a lever *H* pivoted on the end of the ram of the cylinder *G*, the vertical shaft *I* may be turned about its axis. At the upper end of this shaft is a gear segment *J* engaging another segment

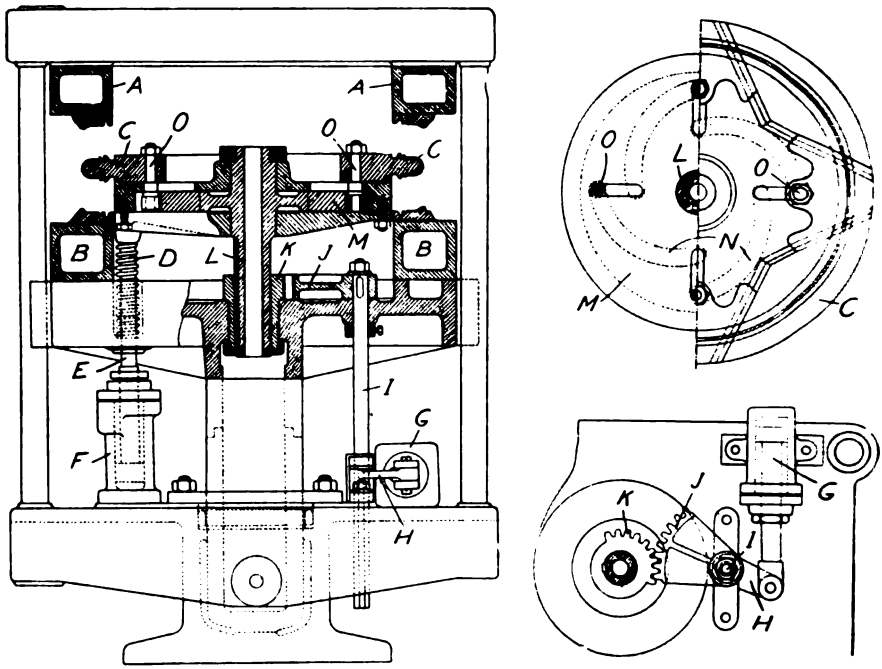

VINCENT VULCANIZING PRESS

K on a sleeve L. On the upper end of this sleeve is a plate M containing spiral cam grooves N. In the core plate are four bolts O which extend into the grooves when the sleeve L is turned by means of the hydraulic cylinder G. When pressure is admitted to the cylinder the plate containing the grooves N is rotated in a counter-clockwise direction, thus forcing the rollers toward the periphery of the plate. This keeps the core and tire stretched to their full extent while the tire is being vulcanized.

WOLBER PRESS VULCANIZER

This press is characterized by the method of extension and retraction of the divided core. The illustration shows on the right a perspective view of the press and on the left a vertical section.

The upper mold A is carried by a heating table B, which is attached to the platen C, that is operated by the hydraulic ram D. The lower half of the mold E rests on a heating table F, supported by the stationary bed-plate G. The core H, divided in segments, is supported by a plate I that is fixed to the ram J. This is hollow and acts as a cylinder for piston rod K, which is provided, at its upper end,

with connecting links that control the extension and the retraction of the core segments.

The operation of the apparatus is as follows: To bring the upper platen *C* into the position it occupies in the illustration, pressure is introduced under the ram *D*. To release the core *H* from the lower part of the mold, pressure is introduced under ram *J*. Finally, to bring about the retraction of the core segments, the piston rod is raised and the segments converge towards the center. When the press is in this position, the casing is placed on the core, and the segments

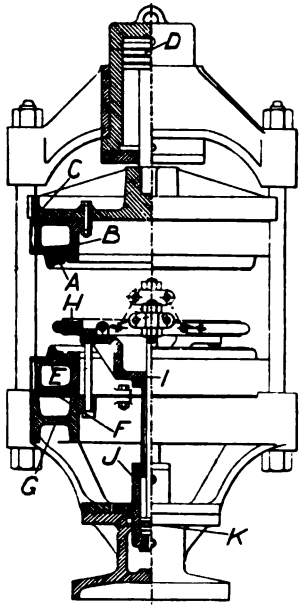

WOLBER PRESS VULCANIZER

extended. It is then lowered in contact with mold *E* and pressure applied by the upper part of the mold *A*. Thus the casing is molded and vulcanized. It is then removed and the operation repeated.

DOUGHTY PRESS VULCANIZER

This is a hydraulic press to be used in connection with a three-part mold and a collapsible core of eight segments. The mold consists of an upper platen *A* and a lower platen *B* for the sides of the tire, and a ring *C* for the tread, all chambered for steam. The core is made up of four segments *D* and four segments *E*, the former being connected with a plate *F* by toggles *G*, and the latter with the plate

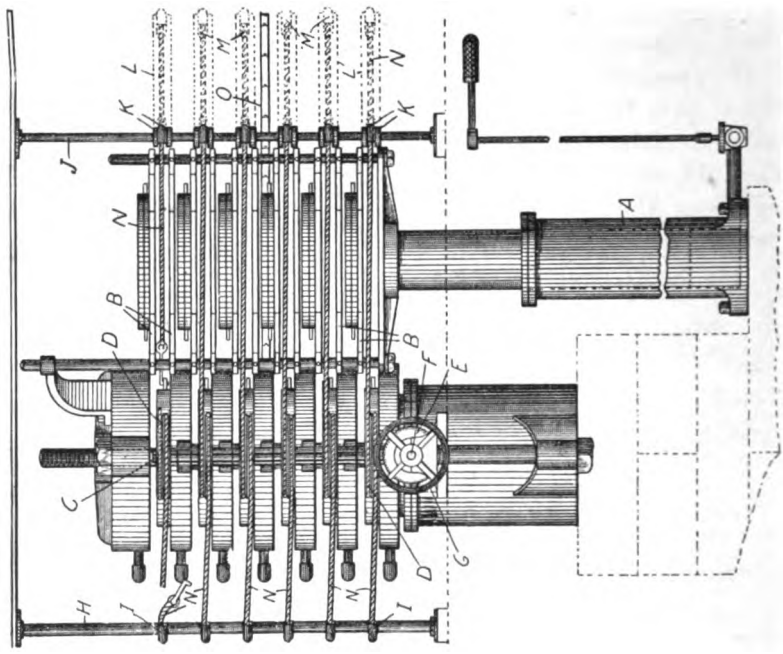

SEIBERLING MULTIPLE PLATEN PRESS

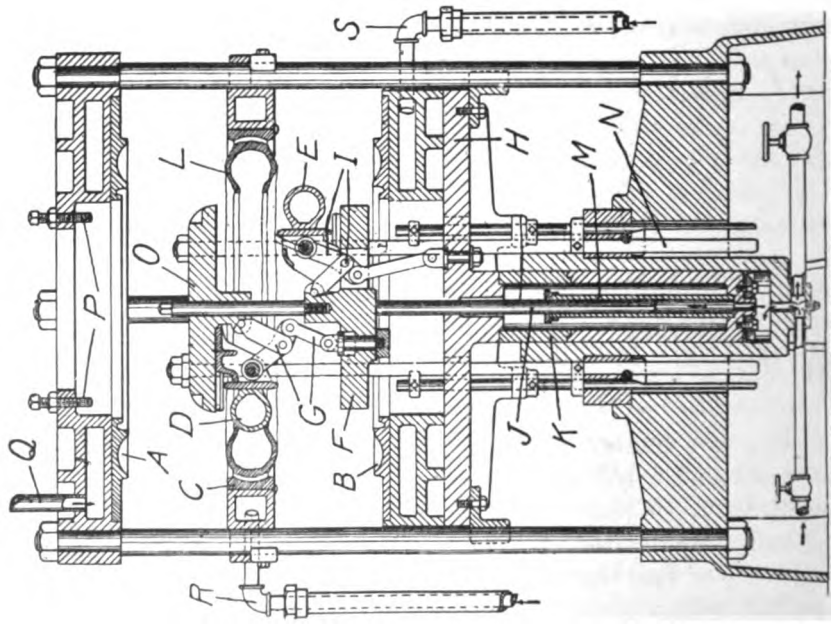

DOUGHTY PRESS VULCANIZER

H by toggles *I*. The plate *F* is raised and lowered by the ram *J*, while *H* is operated by the hollow ram *K*.

With the casing *L* in position in the tread mold *C*, water is admitted to the cylinder *M* to raise the ram *J*. This raises the plate *F* and operates the toggles *G*, forcing the four core segments *D* outward into the casing. At the same time the hydraulic pressure raises the ram *K* and plate *H*, and operates the toggles *I*, forcing the four segments *E* into the casing. The upward movement of plate *H* releases guide rods *N* and allows plate *O* to be raised against stop screws *P*. The ram also forces the upper and lower molds *A* and *B* together, completely enclosing the casing, after which steam for vulcanization is admitted through pipes *Q*, *R*, *S*. When the cure is complete the rams are lowered, which opens the mold and withdraws the core segments from the tire so that it may be removed from the ring *C*.

Seiberling Multiple Platen Press

The Seiberling multiple press provides a means for elevating and delivering a number of tire molds simultaneously to the vulcanizing platens and for removing them from the press after vulcanization. The press is practically of the same construction as the usual type of multiple press, having a plurality of steam-heated vulcanizing plates. Adjacent to the press is a hydraulic cylinder *A* which operates to raise and lower a series of platforms *B*. In front of the vulcanizing press is a vertical shaft *C* which supports the grooved sheaves *D* and a small bevel gear at the lower end, driven by the bevel gear *E* on the horizontal shaft *F*. This shaft and consequently the sheaves *D* are revolved by the hand wheel *G*. At the left of the press is a vertical shaft *H* which supports small sheaves *I*. At the right of the platform *B* is another vertical shaft *J* bearing the sheaves *K*. Also mounted on this shaft *J* are swinging arms *L* which support a series of sheaves *M* on a level with the sheaves *K*. Passing around the sheaves *D* are cables or ropes *N* bearing a hook at each end. The molds with the prepared tires enclosed are placed on a working table *O* and pushed on the alternate platforms *B* as they are brought even with the table by the hydraulic ram *A*, until each alternate platform bears a mold. These platforms are then adjusted vertically until each mold is brought opposite a space between the vulcanizing plates of the press. The hooks on the ends of the cables *N* passing around the sheaves *I* are hooked into the molds and the hand wheel *G* is turned until the molds are drawn into the press. The press is now operated to compress the molds and steam is admitted to vulcanize the tires. During this time another set of

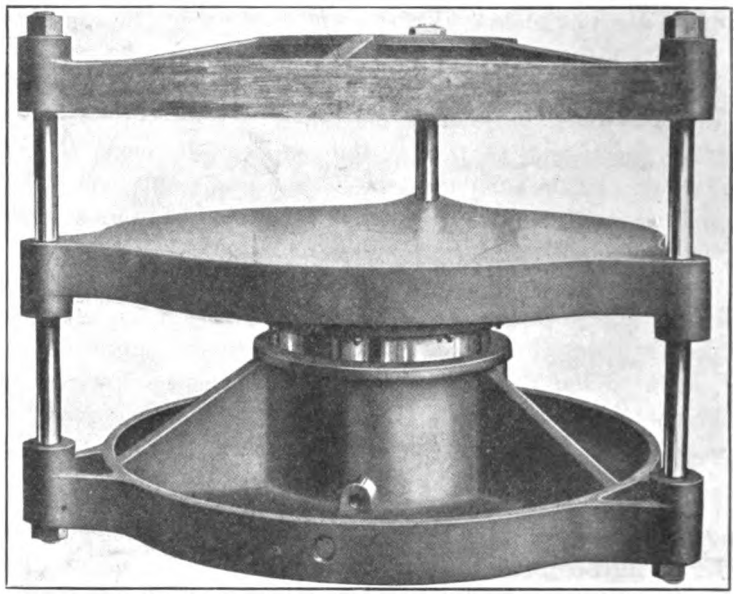

Wood Mold Closing Press

molds with tires enclosed is placed on the alternate platforms *B*. When vulcanization is complete and the press is opened, the cables are hooked into the molds on the side next to the platforms *B* and the molds with the cured tires are drawn out of the press. The position of these platforms is now changed to bring the molds with uncured tires in alignment with the spaces in the vulcanizing press, and the process is repeated. The platforms are now lowered and the molds containing the cured tires are drawn out on the working table.

Wood Mold Closing Press

This press is especially designed for closing rubber tire molds. The base is strongly built and provided with three heavy lugs to support the three forged steel columns which carry the top plate of the press. It is also provided with a circular chamber in which operates the hydraulic ram attached to the mold plate. Both the top plate and the mold plate have smooth surfaces and the latter is provided with three lugs bored to fit loosely the columns and to act as guides. Water is applied to the ram, through a valve and pipe not shown, and the mold plate moves upward, closing the mold, which is firmly bolted together while it is in the press. The ram is then lowered and the closed and bolted mold is removed and taken to the vulcanizer.

Southwork Mold Closing Press

This is a simple press intended exclusively for closing tire molds. Four columns in the heavy base support the top plate of the press. The hydraulic ram attached to the mold plate operates in a circular chamber bolted to the center of the base and supplied with water by a valve and pipe not shown. Lugs at the four corners of the mold plate are bored to fit the columns which act as guides, the mold plate being forced upward by the ram to close the mold so that it may be firmly bolted.

Taylor Tire Molding Press

Taylor's horizontal hydraulic press is for molding pneumatic tire casings and for exerting pressure upon the casing prior to vulcanization, thus effecting greater adhesion between the layers of fabric and rubber and eliminating air bubbles. One-half *A* of the mold is fixed on a rigid spindle *M* mounted in the frame *N*. The other half *B* of the mold is mounted on the head of a hydraulic ram *R*, which is provided with an enlarged piston *S* reciprocating in the cylinder *T*. The frame members *N* and *O* are braced by three horizontal bars *P*. The mold *A* has a central spindle *G*, which fits into the recess *U* in the mold *B* so that the two halves of the mold register exactly when forced together.

The mandrel containing the tire is placed on the spindle *G* and an expansible circular tube is placed around the tire. This tube has a valve by means of which it may be inflated with air or water. Hydraulic pressure is then applied to the piston *S*, forcing the two halves

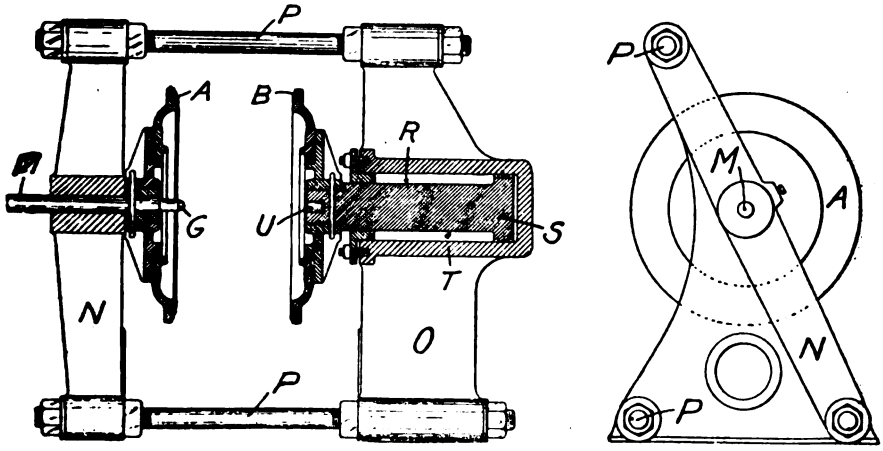

Taylor Tire Molding Press

of the mold tightly together around the tire. The circular tube around the tire is then expanded and the pressure maintained a sufficient length of time to drive out all the air and to press the layers of rubber and fabric firmly together. Water is admitted to the opposite side of the piston *S*, forcing the plunger and opening the mold.

Coffey Tire Molding Press

The object of this machine is to compress the tread mold against the tire core and draw the adjacent sides of the casing toward the beads. The side molds compress the casing adjacent to the beads against the tire core and the edges are stretched from the tread and inwardly toward each other. Thus the fabric plies are stretched, smoothing down all wrinkles and uneven surfaces.

The illustration on the left shows a vertical section of this machine in operative position. Base *A* supports the upper cross head by

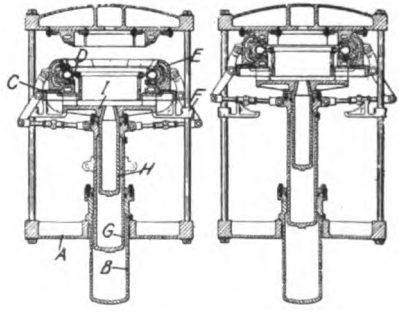

Coffey Tire Molding Press

means of upright rods. The table supports the core *D* and sectional tread mold *E* and normally rests on brackets *F*.

The tire core is placed in the machine and pressure applied to the ram *G* which acts on the levers, forcing the tread mold against the tire. Then pressure is applied to the inner ram *H*, bringing the table *I* in contact with the lower mold, when both tables *C* and *I* are simultaneously raised, forcing the tie against the upper mold by contact with the cross head as seen in the figure on the right. The pressure from both cylinders is then released and tire and core are removed for final curing.

W-S-M Hydraulic Rimming Press

According to the old method used in the manufacture of cord tires, the air bag rings were drawn together by hand-operated bolts

that held them together. This need has resulted in the machine here illustrated, in which the rings are quickly brought together ready to receive the bolts. The cylinder, ram and platens are of heavy semi-steel and the cylinder and base are cast in one piece. The cylinder

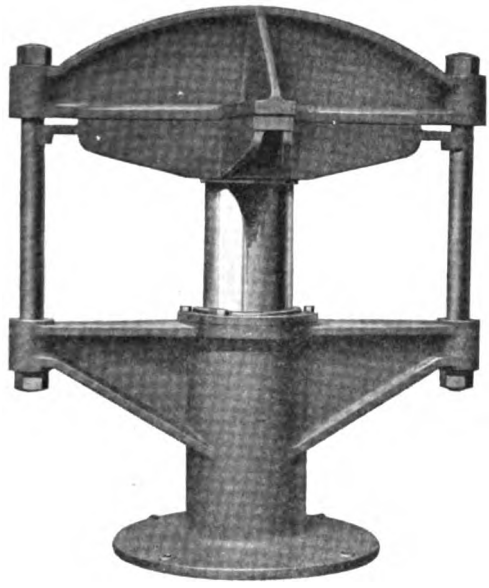

W. S. M. Hydraulic Rimming Press

is outside packed with a U-leather ring packing having a flax core and held in place by a gland which can be easily removed.

The ram cap or lower platen and the upper platen are spider shaped to enable the operator to tighten up the bolts on the rings easily after they have been forced together. The upper platen is supported on heavy steel rods and acts as the upper frame of the press.

Southwark Rimming Press

This press, designed for the rapid forcing together of air bag rings, has spider shaped platens enabling the operator easily to tighten the bolts on the rings after they have been forced together The design of the base is such that the cylinder wall is relieved of the tension caused by the pull on the columns, the tension being taken up in the flanged wings that merge into the heavy flange about the top of the cylinder. The center of gravity is located so low that bolting the press to the floor is unnecessary. The cylinder is outside packed with a

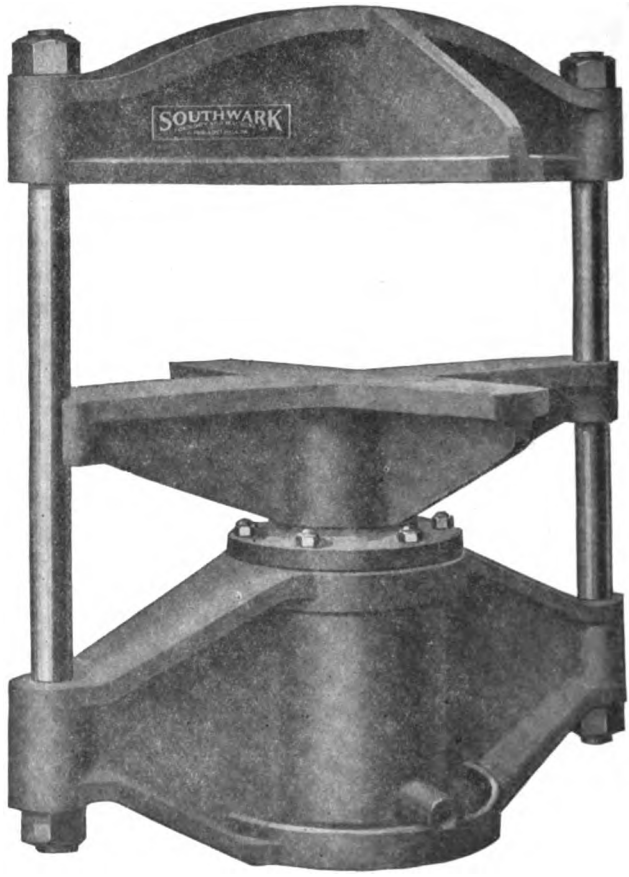

SOUTHWARK RIMMING PRESS

U-leather ring packing with flax core, the packing being held in place by an easily removable gland. A drip pan contributes to the neatness of the curing room. The press has a capacity of 14 tons at 350 pounds pressure. The stroke of the ram is 14 inches and the size of the tables 3 feet 2 inches each way.

HORIZONTAL VULCANIZERS

For curing wrapped tread tires in open steam a horizontal vulcanizer or heater is used. It is built like a horizontal boiler shell with a door at one or both ends. In this the tires are placed either suspended by pulleys and hooks from an overhead track or in molds piled on a

movable truck running on a track along the bottom of the vulcanizer and kept at proper temperature until vulcanization is effected.

A typical horizontal, jacketed vulcanizer has an outer and an inner wall. Between these walls is a space, which serves as a heat insulator when the open cure is used in the heating chamber. In the dry heat process steam is introduced into the space between the walls through a special inlet, in which case the main inlet is closed. Pressure valves are provided in the inner walls, while drain cocks allow condensation to be drained off. After the goods to be vulcanized have been run into the heater the door is closed and fastened by bolts, and steam is turned on.

Dry heat in ordinary practice means air heated by steam confined in pipes or in jackets adjacent to the air. In the early days it was, however, customary to have the dry heaters set above coal or wood furnaces, the heating being done by the flame on the outside.

Seabury Vulcanizer

Seabury's hot-jacketed vulcanizer is of the horizontal type, having a heating jacket to assist in keeping the steam at a high temperature and prevent it from condensing on the walls. The goods are placed in the vulcanizer surrounded by the jacket which leads directly from the fire box, so that the flames and hot gases surround the vulcanizer and pass up through the flues into the chimney. Steam is admitted through a perforated pipe which runs along the bottom of the vulcanizer. The usual fittings are a blow-off valve, guage and thermometer. The door is mounted on a roller so that it is easily moved.

Gammeter Horizontal Press Vulcanizer

The novelty in this vulcanizer as compared with the vertical type, consists in accessibility of the operating parts and means for more quickly charging and discharging the tire molds. Moreover, the boltless molds are piped individually, permitting the use of inward or outward pressure in the vulcanizing process.

The drawing represents a side elevation of the apparatus, which consists of a horizontal heater *A*, and a train of press cars *B, B, B,* that are coupled together and moved in and out of the heater by an endless chain gearing driven by the motor *C*.

Each press car includes a platform mounted on flanged wheels, upon which the boltless tire molds are stacked. The under part of the platform is formed with a shallow cylinder of relatively large diameter in which reciprocates a hydraulic ram. The mushroom-shaped press head *D* connects with the upper end of the ram by a screw joint so that

it may be removed when the molds are being loaded or unloaded from the car.

In operation the press heads being removed, the molds are stacked on the cars and connected to the internal pressure supply line. The heads are then lowered, the stems traversing the interior of the mold stack, and screwed to the ends of the rams. Pressure is thus successively applied until the molds are completely closed, when the cars

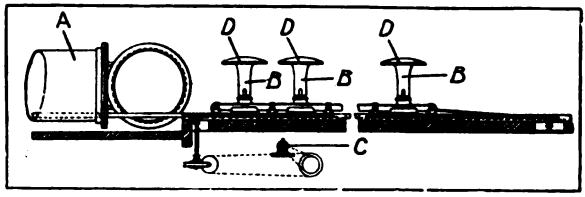

GAMMETER HORIZONTAL PRESS VULCANIZER

are run into the heater and pressure is applied to the interior of the tires. The vulcanizer head is then closed and the tires cured in open steam.

McLEOD HORIZONTAL VULCANIZER

This apparatus for forming and vulcanizing pneumatic tires comprises a vulcanizer pot in which a series of movable fluid-tight molds may be suspended, a manifold provided with branch pipes having nozzles for conducting fluid from and to the cavity of the molds while the latter are confined in the vulcanizer pot, and an automatic valve located between the cavity of the mold and the vulcanizing chamber.

Before placing molds containing uncured tires in the vulcanizer, water at the desired pressure is introduced to the interior of the tires to force them against the walls of the mold cavities. The molds are then hung on the travelers on the track rail of the vulcanizer and coupled to the steam branch pipes. When the entire set of molds is in the place the cut-off valve in the steam manifold is then opened and the vulcanizer door closed. Steam is then admitted to the vulcanizer and its escape through an outlet pipe so controlled for a predetermined period as to maintain the steam in the vulcanizer at a lower pressure than the water in the molds until the latter have become heated. As the pressure gauge indicates expansion of the water in the molds the controller valve is opened slightly to maintain the desired temperature. When the molds have become thoroughly heated and an initial step of vulcanization has been reached, the controller valve is fully opened, permitting the water in the molds to drain off through the branch pipes,

Meanwhile, the steam pressure in the vulcanizer is maintained, and as soon as the water pressure in the tires becomes less than the steam pressure in the vulcanizer the automatic valves are unseated. The steam then enters the tires, forcing the water out and replacing it as a pressure medium as fast as it is discharged. The controller valve is then closed or partly closed and the steam pressure circulating both in the vulcanizer pot and within the tires is maintained to the proper degree and length of time to completely vulcanize the tires.

QUICK-OPERATING VULCANIZER DOORS

Adamson Self-Sealing Door

Extending from the lower half of the flange of the vulcanizer shell is a lip with a concentric groove, into which the lower half of the door fits. On the upper half of the door is a similar lip with a concentric groove which fits into the upper half of the flange. In the face of the flange is an annular groove containing a packing ring. Through an opening, steam or water under pressure is forced into the groove behind the packing. To close the vulcanizer the door is lowered into the grooves and the pressure turned on behind the packing ring.

Williams Boltless Quick-Opening Vulcanizer Door

The cast-steel shell ring and door have each a series of projecting lugs. The door is turned by means of a lever inserted into one of the projections, so that its lugs are forced under the lugs of the head ring. This makes it impossible for the door to be forced outward. The door rotates on a trunnion at its center, which is a part of the cast-steel door hinge permitting it to be swung open like any ordinary vulcanizer head. Stops are provided so that the operator, is always sure to have the door in the proper position before the steam is turned on.

When steam is turned into the vulcanizer and the pressure raised to from one to three pounds, the wedge-shaped, automatic rubber packing effectually seals the joint against the escape of steam. There is not a bolt or nut to tighten, and the greater the pressure, the tighter the joint.

The points of advantage claimed for this head are a great saving of time, ease of operation and safety. The head is adapted to be applied to the old bolted type of vulcanizing cylinder.

A German Hydraulic Door Closing Device

In a German type of horizontal vulcanizer the door is hydraulically sealed. The head and door are planed off and fitted with a packing

joint. The door is suspended by a cable which passes over pulleys and bears a counterweight. The door is cast with projecting arms, having slots which fit over the ends of the rods when the door is in place. On top of the vulcanizer is a hydraulic cylinder, the piston of which bears a cross yoke. This yoke is connected with levers pivoted to the sides of the vulcanizer and operates vertical yokes. To close the door it is lowered so that the slots in the arms fit over the ends of the rods. Then

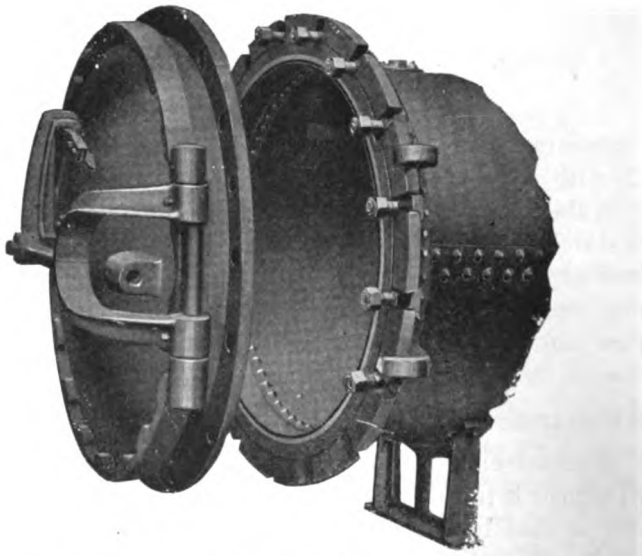

WILLIAMS QUICK-OPENING VULCANIZER DOOR

water is admitted to the cylinder, raising the yoke and the levers, and forcing back the yokes and rods. This forces the door tightly against the end of the heater.

SHAW DOOR LOCK

On the outer end of the vulcanizer shell is a heavy ring with a groove containing a packing ring. A metal ring supports eight thrust blocks having wedge-shaped lugs which are adjustable longitudinally by set screws. Riveted to the outside of the door is a heavy ring having a bearing upon which revolves the latch ring. This has eight wedge-shaped blocks, which engage the lugs when the ring is turned by the locking lever. The hinges are attached to the door by adjustable bolts, which allow the hinge connection to be made without binding after locking the door.

Bridge "Akron-Williams" Door

This quick-closing door is raised and lowered by a rack and pinion movement operated by a pair of hand wheels. The door or "head" is counterweighted and slides in machined guides. The shell ring, against which it fits, has a circular groove containing a U-shaped packing ring with a wedge-shaped extension. Steam, air or water under pressure is admitted behind this packing, and forces it against the door, sealing the vulcanizer. When steam is turned into the vulcanizer it presses the wedge extension of the packing ring against the inner face of the door.

Allen Quick-Opening Door

The Allen door can be fitted to any vulcanizer door frame. It swings on a vertical axis, suspended between two ball bearing arms which are hinged to the head flange. The door thus closes squarely

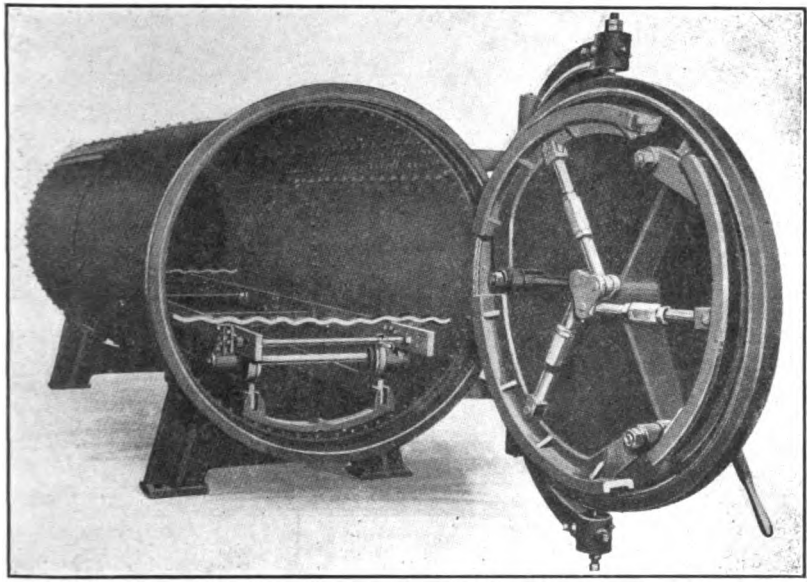

Allen Quick-Opening Vulcanizer Door

against the packing, which is entirely surrounded by metal and cannot be injured. It is locked on the inside by three grooved segment rings, pivoted at one end and moved by tangent bolts attached to the fee ends. The bolts are operated from the outside by turning a short shaft which projects through the center of the door.

Barber Vulcanizer Door

The door is provided with two series of circumferentially spaced lugs extending outwardly. The shell has two series of spaced lugs extending inwardly, the spacing being arranged to permit the lugs of the door to pass through. By a partial rotation of the door the various lugs are made to interlock, thereby sealing the vulcanizer ready for the admission of steam.

Southwark Quick-Opening Vulcanizer Door

This door of the quick-opening type possesses, in connection with unusual facilities for easy handling, the quality of being explosion

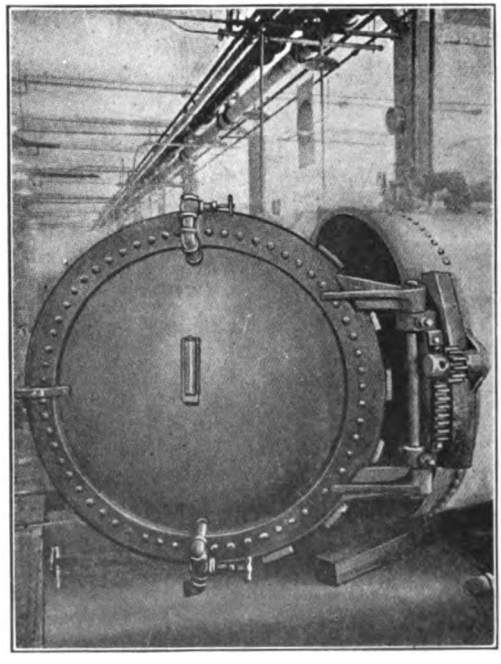

Southwark Quick-Opening Door

proof. In the old type vulcanizer head provided with swinging bolts, should a few of these bolts become loose, as often happens, the other bolts are thrown out by the internal pressure and the door opens violently, causing an explosion. The locking mechanism of the Southwark door, however, is of the breech-lock type and constructed so that when the cover is shifted the taper on the lugs lifts the lid sufficiently to admit air, thus preventing the possibility of an explosion.

The door is opened quickly with very little effort, by means of a rack and pinion mechanism. Connections are provided in the head for attaching temperature and pressure gauges. All castings are open hearth steel and the dished part of the door is boiler plate.

Where vulcanizer doors of the swinging bolt type are used, this style of door can easily be installed by making a special locking ring which may be bolted to the existing ring that is riveted to the shell.

Simplex Quick-Opening Vulcanizer Door

The Simplex boltless door for horizontal and vertical vulcanizers is of the quick-opening type and has demonstrated its value in saving time and labor wherever it has been used. The door is designed along

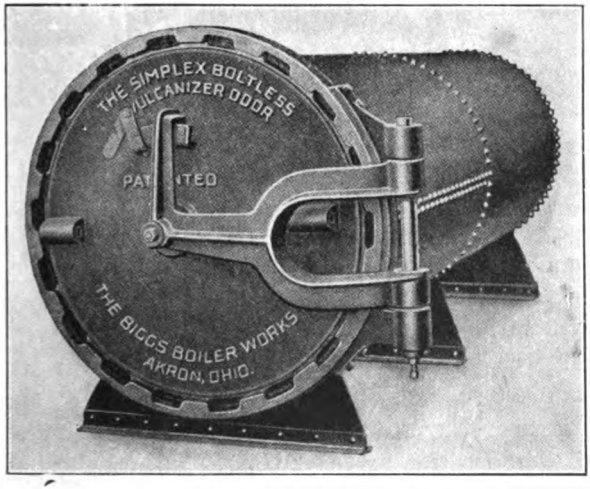

Simplex Quick-Opening Door

the lines of maximum strength combined with ease and simplicity of operation. It is made throughout of cast steel, and all the working parts are accurately machined and fitted. The door is provided with adjustments whereby the natural wear occasioned by long service may be taken up readily. The opening and closing operation is accomplished by turning the door approximately 8 inches, a question of only 30 seconds in either case, while the automatic locking feature insures tightness and safety. A separate batting ring is provided, so that this new door may be attached to an old type of door by using the old bolts. The Simplex door is furnished in all standard sizes from 24 inches to 72 inches in diameter.

VULCANIZATION CONTROL

Although vulcanization is the basic operation on which the value of the product depends, it has come under scientific control only within recent years. The importance of exact control of any manufacturing process is axiomatic; without control, uniformity of product is impossible, and this is especially true of vulcanization. Dependence solely on the carefulness and experience of a heater man in charge of the operation of the vulcanizer affords but a very imperfect means of control and invariably challenges the well-known fallibility of human skill. The human operator cannot be relied upon, no matter how expert and conscientious, just because he is human. He forgets, becomes fatigued, has his attention distracted and makes mistakes, whereas the automatic control has proved itself a dependable and efficient device insuring the desired results.

Importance of Uniform Temperature and Dry Steam

Mention may be made of certain points which emphasize the value of vulcanization control in eliminating defective product. The effect of too long continuation of the heat of vulcanization is an "overcured" or burned product, resulting in such defects as excessive hardness, lack of elasticity and rapid deterioration with age. Too short continuation of the cure leaves the goods "undercured," soft, tacky, or porous, and practically without elastic effect.

Curing in wet steam is undesirable because it results in uneven distribution of heat in the goods, hence irregularity of cure and tendency to undercure. Dry steam circulation in the heater and constant elimination of condensation are essential to uniform heat distribution, either in open steam or press cure vulcanization.

Necessity of Gradual Increase in Temperature

It is always desirable in vulcanizing rubber goods in large masses to raise the heat gradually over a given period to allow for heating the cores or molds to the point where they will not cause loss of heat by condensation, and thus allow the rubber to attain the vulcanizing temperature of the steam. Sometimes this result is obtained by raising the temperature of the heater gradually and sometimes by raising it in a series of steps. The object in either case is to insure the application of the vulcanization temperature to the goods for a prescribed length of time.

Having determined a suitable plan of conducting the heat progressively, these conditions may be positively reproduced at will by

mechanical means. By hand regulation the rise of heat from stage to stage lacks uniformity and the vulcanizing temperature never remains constant, but fluctuates greatly.

These irregularities have a marked influence on the perfection and uniformity of cure and frequently are the cause of peculiar conditions very baffling to eliminate.

Automatic Control of Vulcanization

The development of automatic control of time, temperature and exhaust has made possible perfect vulcanization, a condition vitally essential to a guaranteed product. The system perfected and extensively adopted in American practice necessitates special instruments and system of piping, but is not subject to disarrangement and is positive and reliable in operation.

Steam Control

The principle on which steam control is regulated is the transmission and multiplication of the motion of a capsular spring which expands and contracts with the changes in temperature and consequent change in steam pressure. A ball valve is thus operated, which allows more or less air pressure to open or close a diaphragm-motor steam valve to a greater or less extent. Compressed air affords an instant, flexible and effective means for doing any amount of work required, especially when the steam temperature shows only a slight tendency to change, and when, therefore, the capsular spring moves only an infinitesimal extent.

For the operation of a tire-vulcanizing press a compound controller is frequently used. One of these controllers maintains a uniform steam temperature within the press, while the other takes care of the exhaust at the bottom of the press by periodically relieving the heater of the water of condensation and the super-saturated steam. An automatic time control instrument is set to regulate progressive increase of temperature and the duration of the cure, at which point it promptly shuts off the steam supply and opens the exhaust. It can also turn on cold water for flooding and cooling the contents of the vulcanizer.

Charting the Cure

In the system of vulcanization control is usually included a recording thermometer which produces on a chart a graphic record of just what the controllers have accomplished in maintaining uniform temperature and time, and which serves as a permanent record. Examination of the charted records shows the exactness with which it is possible to control the time and heat of the vulcanization operation.

Control Devices

A great variety of instruments for providing dry steam, and for indicating, recording and controlling temperature, pressure and vacuum are in use. These include steam separators, pressure regulators or reducing valves; thermometes, recording thermometers and temperature alarms; steam pressure gauges, recording and alarm gauges; vacuum gauges and thermostatic temperature regulators. They are the same for vulcanizing tires as for curing other rubber goods and so do not call for extended description here.

Tagliabue Control System

The operation of the Tagliabue automatic controller of time, temperature and exhaust in tire vulcanizers is shown in Fig. 1. The mechanism consists of a capsular spring which expands and contracts

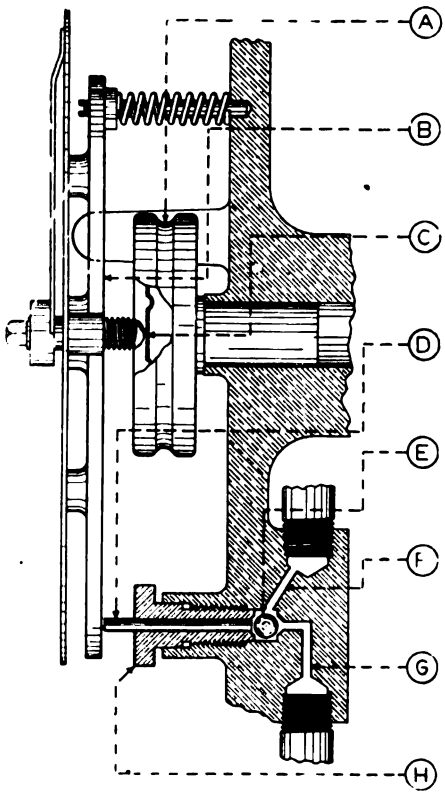

A — Capsular spring which expands and contracts with temperature change tendency and consequent change in steam pressure.

B — Transmitting lever, which multiplies as well as transmits the movement of the flexible top of the capsular spring *A*.

C — Adjustment screw, for temperature setting, as determined by extent to which this screw projects—through lever *B*.

D — Air valve pin which floats in a current of air as it follows the movephragm-motor steam valve.

E — Air valve ball which regulates the air pressure on top of the diament of the transmitting lever *B*.

F — Controlled air outlet for this auxiliary force which does the actual work of operating the diaphragm-motor steam valve.

G — Air inlet for compressed air at 15 pounds per square inch pressure, only a nominal amount of which is needed.

H — Air escape bushing which not only guides valve-pin *D*, but also affords a passage for relief of air pressure on top of diaphragm-motor steam valve.

Figure 1. The Principle of the Tagliabue System

in direct ratio with the temperature tendency within the apparatus to which the controller is attached; a transmitting lever for multiplying and transmitting this movement; a ball valve which is operated by the transmitting lever and which allows more or less air pressure to open or close the steam valve to a greater or lesser extent; air inlet and outlet connections for the air pressure which does the actual work of regulating the steam valve.

The capsular spring *A* is a phosphor bronze shell with a flexible top that when a temperature controller is involved is connected by flexible tubing with a thermostatic bulb, partly filled with ether. When the bulb temperature varies, the pressure of the vapor above the ether varies in accordance and moves the top of *A* in response to the merest tendency toward a change at the bulb. In the case of a pressure controller the capsular spring is directly connected to the controlled steam pressure.

The transmitting lever *B* is provided with an adjusting screw at the point where it contacts with the capsular spring. Advancing or withdrawing this screw, in connection with a dial and pointer arrangement, provides an ideal adjustment for higher or lower temperature maintenance.

The ball valve is extremely simple; it is sensitive and positive because frictionless and self cleansing. When the temperature tends to go too high, the consequent slight expansion of the capsular spring *A* and the resulting movement of the transmitting lever *B* allow the valve stem *D* to move upward. This increases the opening for the incoming air, which enters through *G*, and restricts the opening for the air which escapes past the pin *D*. Thus the air pressure on the diaphragm-motor steam valve, through passage *F*, is increased, and the consequent closing movement of the steam valve checks the excess steam. The opposite effect occurs, of course, when the temperature tends to diminish and more steam is needed.

The compressed air affords an instant, flexible and powerful means for doing any amount of work required, especially when the steam temperature shows a mere tendency to change, and when, therefore, the capsular spring moves only an infinitesimal extent.

The actual operation of this system applied to a tire press is briefly as follows:

Fig. 2 shows a tire vulcanizing press to which the following units are applied. The first is a compound controller which consists of two controllers housed in one case. One of these controllers maintains

a uniform steam temperature within the press, while the other portion of the controller takes care of the exhausting or venting at the bottom of the press by periodically and frequently relieving the heater, not only of water condensation, but of the supersaturated steam also. Another controlling unit is the automatic time controller which, after the vulcanizing period is at an end, automatically shuts off the steam supply and opens the exhaust wide. This can also be arranged to turn on cold water for flooding and cooling the contents of the press when desired.

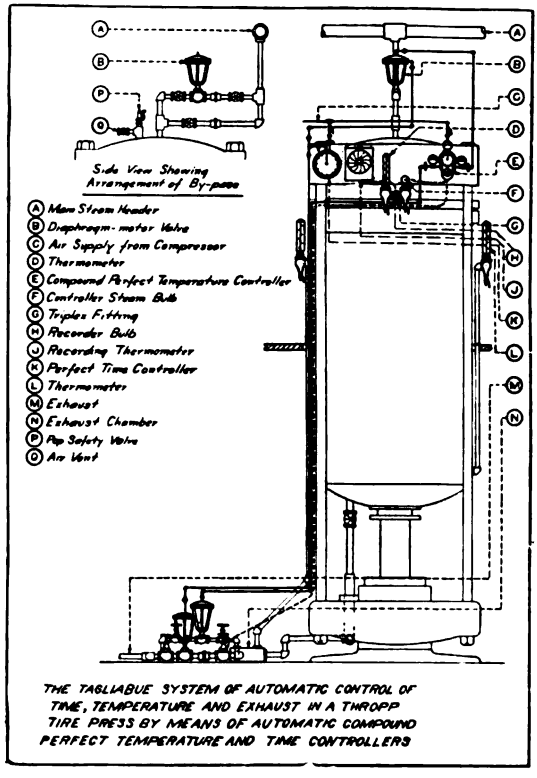
Side View Showing Arrangement of By-pass
A Main Steam Header
B Diaphragm-motor Valve
C Air Supply from Compressor
D Thermometer
E Compound Perfect Temperature Controller
F Controller Steam Bulb
G Triplex Fitting
H Recorder Bulb
J Recording Thermometer
K Perfect Time Controller
L Thermometer
M Exhaust
N Exhaust Chamber
P Pop Safety Valve
O Air Vent
THE TAGLIABUE SYSTEM OF AUTOMATIC CONTROL OF TIME, TEMPERATURE AND EXHAUST IN A THROPP TIRE PRESS BY MEANS OF AUTOMATIC COMPOUND PERFECT TEMPERATURE AND TIME CONTROLLERS

FIGURE 2. AUTOMATIC CONTROL APPLIED TO VERTICAL HEATER

At the same time this controller rings a bell, or otherwise signals the operator, that he may know the heater is blowing off and be ready to open and recharge it. Another unit is the recording thermometer, which gives a graphic record of just what the controllers have accomplished in the way of uniform temperature maintenance, the final units being the mecurial thermometers, which serve as a check on the recorder.

Assuming that the operator has charged the heater and is ready to start the cure, he first sets the time controller with the setting key, turning the hand clockwise from the starting point to the exact time period required for the cure. Then he opens the hand valve which is between the steam supply source and diaphragm motor valve *B*, shown in the 'Side View Showing Arrangement of By-pass." Steam now enters the heater and the hand of the time controller *K* will commence to travel backward, or counter-clockwise. At the start diaphragm-motor valve *B* will be wide open, but will gradually close as the temperature builds up within the heater until finally it will assume the exact throttling position required to maintain the temperature for which the controller is set. When the steam first enters, it has little effect on the thermostatic bulb of the temperature controller *E* because of the rapid condensation, but as the molds heat up, the condensation becomes less and the thermostatic bulb transmits the temperature effect to the capsular springs of the temperature controller. This gradually expands and moves the transmitting lever within the controller, causing more and more compressed air to flow to the diaphragm-motor valve *B*, which assumes the throttling position mentioned. Should the steam pressure in the header *A* increase, causing the temperature within the heater to go higher, this effect is instantly transmitted to the controller, and more compressed air is allowed to enter the top of the diaphragm motor valve *B*, which will close, thus checking the rise in temperature. If on the other hand, the steam pressure within header *A* falls, the reverse will occur and the diaphragm motor valve will open wider.

In the meantime the exhaust control portion of the controller *E* is intermittently draining the heater, because as the condensation of the supersaturated steam, which is at a lower temperature, comes in contact with the thermostatic bulb of the latter it causes the diaphragm motor valve on the exhaust line to open, and the steam within the heater will eject the water and supersaturated steam. But when dry steam contacts with the thermostatic bulb it will cause the diaphragm-motor valve to again close. This occurs periodically during the vulcanizing period. During this time the hand of the time controller *K* has been slowly returning to the starting point. When the time is finally up this hand trips the time controller mechanism and compressed air, flowing through the time controller, with shut off diaphragm-motor valve *B*, the steam inlet valve. At the same time compressed air flowing to the "reverse acting" diaphragm-motor valve on the exhaust line will cause the latter to open wide, allowing all of the steam left within the heater to be vented out. The operator is also signalled to unload the press for another cure.

The time controller can also be arranged, although it is not thus shown in Fig. 2, so that it will cause a third diaphragm-motor valve to open wide when the vulcanizing period is up, and cold water will flood the heater until the operator shuts off the water supply.

The water of condensation settles in the exhaust chamber N in Fig. 2. This chamber has two outlets, as shown, each of which is provided with a diaphragm-motor valve, one of these being a direct acting and the other a reverse acting valve. The direct acting valve opens when the compressed air pressure is relieved and closes when the air pressure enters the top. This valve is in connection with the exhaust control part of the compound controller shown at E in Fig. 2. When the temperature gets low this valve opens, thus venting the heater until dry steam comes in contact with the thermostatic bulb. The reverse acting valve mentioned is connected to the time controller, and, being reverse acting, remains closed while there is no air pressure on the diaphragm top. When, however, the time controller functions, and allows air to pass and flow to the top of this reverse acting diaphragm-motor valve, it opens wide and thus blows off the apparatus when the time period is up. The same units can be applied to a horizontal vulcanizer, used for curing treads, inner tubes or the open cure process. The functioning of the different units is as already described.

Stratton Steam Separator

This separator utilizes centrifugal force as the means of separating the water from the steam. As the steam and the water enter the separator they are caused to pass through a spiral path formed about the central core. The sudden change from a straight line flow to this spiral path imparts a whirling motion to the steam and water. Water is 200 or 300 times as heavy as steam, and therefore does not turn corners as easily. At any turn the centrifugal force throws the water against the wall forming the bend, while the steam makes the turn and goes on without the moisture. With a properly formed bend, large or small quantities of water will swing out of the curving steam current, meet the wall at an angle, and slip smoothly along without the slightest spatter or splash, following closely to the wall until the motion dies out. Thus complete removal of water from the steam is secured and the vulcanizer receives only dry steam.

Fisher Reducing Valve or Pressure Regulator

When steam pressure is used in the vulcanizers at a lower temperature than that carried in the boilers it is necessary to employ a regulating valve to maintain a constant pressure.

The diaphragm-actuated type of valve controlled by lever and weight, has for years been accepted by engineers due to its simplicity and positive action. The Fisher valve is particularly adapted to low-pressure service, but the type of construction permits the use of different sizes of diaphragms, making it suitable for various pressures. The inner valve is a semi-balanced, double-seated type with beveled seats and seat rings ground in. This valve will operate with a comparatively small weight and does not require a dash pot, as would be the case with a single-seated valve.

In operation the inner valve is normally held by lever and weight. The volume of pressure passing through the valve builds up within the low pressure main and enters the diaphragm chamber through the controlling pipe line. When the low pressure reaches the desired point, a balance is formed with lever and weight, and thus the valve opening is regulated according to the steam consumption and the determined amount of low pressure maintained.

H. & M. Thermometers

As steam at various pressures always has a corresponding temperature a thermometer may be used to determine the pressure in a vessel. For instance, steam at a pressure of 100 pounds above vacuum has a temperature of 327.6 degrees F.; at 150 pounds, a temperature of 358.2 degrees, and at atmospheric pressure, or 14.69 pounds absolute, it is 212 degrees. Knowing the steam pressure desired and the corresponding temperature, the thermometer can be used to designate the pressure being carried.

Thermometers are used for both low and high range. The former ranges from 20 degrees F. below to around 220 degrees above zero, the latter from zero to 1,000 degrees F. Thermometers for use with steam are usually made with both a temperature and pressure scale.

The straight H. & M. thermometer has a separable socket connection and a 12-inch scale with a range 200 to 340 degrees F. and 0 to 100 pounds pressure. It is used on open steam vulcanizers, tire and belt presses.

Brown Vulcanizer Recording Thermometer

A type of thermometer for recording vulcanizing temperatures up to 800 degrees F., or 425 degrees C., which embraces a number of original features, is shown here. It operates on the principle of the expansion of gas with change in temperature. A bulb of copper containing nitrogen gas under pressure is connected to a recording instru-

ment by a small copper tube protected by flexible steel tubing. The recording instrument has a helical spring somewhat similar to that used in pressure gauges, and the expansion of the gas in the bulb exerts pressure which is conveyed by the capillary tube to the helix, which expands proportionately. This helix is directly connected to a recording arm and pen which marks on the record chart. Tubing as long as 100 feet can be furnished if required, so that the recording gauge may be placed at some distance from the point where the temperature is measured. The clock which revolves the chart is mounted directly on the front plate on which the chart rotates, insuring alignment of the clock and chart plate.

The clips holding the chart in position are mounted on the door so that when the door is opened they are automatically swung away from the chart, permitting its easy replacement without interference.

BROWN RECORDING THERMOMETER

A device is furnished which raises the chart pen from the chart automatically when the door is opened, and frees the pen automatically when the door is closed.

This instrument is also made in indicating form, where desired, to indicate the temperature on a dial instead of recording it on a chart. Several different types of bulbs may be had, either with threaded connection for insertion in mains and pipes, or with lead coating to withstand chemicals and acids.

BRISTOL RECORDING GAGES

The original form of the Bristol recording pressure and vacuum gages has a pressure gage with switch board form of outer casing

common to both the pressure and vacuum gage. The charts and operating mechanism, however, are different. The mechanism is for recording high pressures up to 12,000 pounds per square inch, used for steam, air gases or liquids, and made to read in pounds, ounces, inches, feet, metric or any desired units. The recording arm is attached to the moving element, which consists of a helical tube with several convolutions, giving ample motion without overstraining. The chart is moved by a reliable clock movement.

Another mechanism is for a low pressure vacuum gage for total ranges from full vacuum to 6/10-inch of water. The even scale chart, operated by a special clock movement, is graduated for range of 0 to 30 inches of mercury or full vacuum. The diaphragm types of pressure recording tubes are used, to which the recording arm is directly attached.

Edson Recording and Alarm Gage

It is suitable for use with steam, water or any other liquid except ammonia. The gage is connected to an electric bell which sounds an alarm when a predetermined high or low pressure is reached. The recorder has a chart speed of one-half to one inch per hour. The gage can be had for recording vacuum or for recording both pressure and vacuum.

Powers Temperature Regulators

The thermostat, or sensitive bulb, is arranged in the heated space and transmits the changing vapor pressures through a flexible armored tube to a metallic diaphragm located in the bonnet of the steam valve. The expansion and contraction of the bellows opens or closes the valve, thereby regulating the supply of steam to the heater. Adjustment for different temperatures is accomplished by changing the position of the weight that slides on the valve lever. In vulcanizer installations, the thermostat is, of course, located within the heated space while the valve is arranged on the outside.

Honeco Vulcanizer Temperature Controller

In this device two controlling systems are compactly combined in one casing, one system to control the inlet steam for maintaining the temperature in a vulcanizer, tire press, retort or any closed space, and the other to control the discharge of condensation and wet steam from the same apparatus. While this combination of two controlling systems in one casing is not new, however, the systems themselves are novel, and interesting.

There are no fulcrums and levers that require delicate bearings and accurate adjustment and alignment. A valve is located within the adjusting plug, and the latter projects through the front of the casing, permitting the removal of the valve, without the necessity of removing the casing or loosening any connection for adjustment of the air plug.

The air valve is the most important part of the operating mechanism of any air-operated controller. The Honeco valve is held against its seat by the tension or compression of the spring and is lifted by the expanding capsular diaphragm when inflated by the pressure actuating it. The upward movement of the diaphragm prevents the valve freezing to its seat because of gumming or corrosion. The adjustment

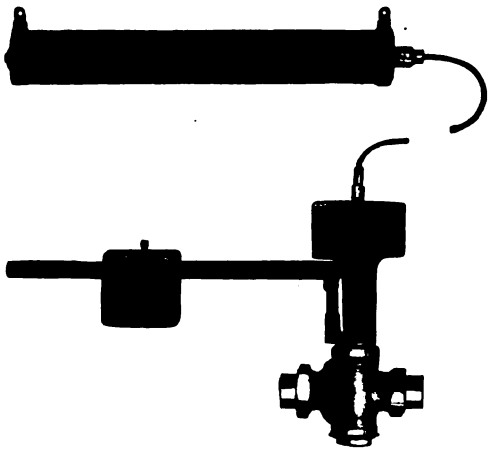

POWERS TEMPERATURE REGULATOR

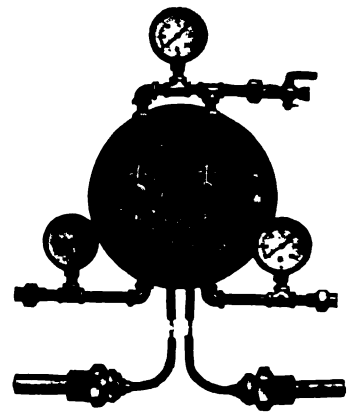

HONECO TEMPERATURE CONTROLLER

or setting is made with a small wrench and as the entire valve is turned, there can be no change of temperature or pressure while adjustment is being made.

HYDRAULIC ACCUMULATOR SYSTEM

The illustration shows a type of hydraulic accumulator installation that is representative of those in use in up-to-date rubber factories. It is a high and low pressure hydraulic accumulator and intensifier system that is automatic in operation and furnishes both high and low pressure to a battery of hydraulic presses without attention from the operators other than the manipulation of the regular press operating valves.

The high and low pressure triplex hydraulic pumps that furnish the water supply against the pressure of the accumulators are motor driven. Each pump is automatically controlled from an electric switchboard which stops the pump when the accumulator load is raised

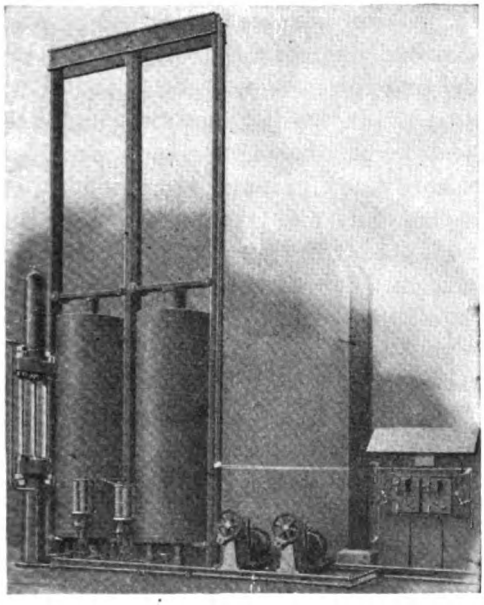

HYDRAULIC ACCUMULATOR

to a predetermined point and again starts it when the accumulator recedes below this point.

This system has the capacity for developing any pressure from 850 to 10,000 pounds per square inch.

VULCANIZING THE CASING

The final process is given to the casing by pressure of a mold or cloth wrappings during vulcanization. The pressure is necessary to keep the tire in shape and prevent flowing of the softened rubber while subjected to heat.

WRAPPED AND MOLDED TIRES, SINGLE AND DOUBLE CURE

In the single cure wrapped tread process the tire is built up on a core, pressing two metal side flanges or toe molds shaping the beads against each side of the tire up to the edges of the tread, then cross wrapping the whole spirally with strips of cloth, putting it into a heater and

vulcanizing completely at one time, the tread being exposed to the direct action of live steam through the porous cloth wrapping. In order to insure uniform pressure upon the tire the side flanges are often applied as pressure rings outside the cloth wrappings, or again fabric pads are applied to shape the clincher beads, the tire is cross wrapped and metal pressure rings are then put in place. An inflated air bag, a canvas covered inner tube, is sometimes substituted for the iron core inside the tire.

The compressed air in the bag smooths out all the irregularities in the layers of fabric and rubber as one's hand smoothes out the wrinkles in a garment, thus eliminating the hidden ridges and hollows that might induce blowouts and reduce mileage. But whatever the vulcanizing core, wrapped tread tires made by what has come to be known as the "open cure" process do not receive the pressure that a molded tire gets, and in consequence may have less cohesiveness.

In small tire plants the wrapping of tires with cloth is still done by hand, but for the most part machines are employed. Some of the machines also unwrap the vulcanized tires and rewind and prepare the fabric strips for further use, while others utilize the same supporting spider for the core throughout the various steps of the tire building process. In certain instances the same machine can be used for wrapping the finished tires with paper for shipment.

The single cure molded tire is built up on a core, painted with a soapstone solution which acts as a lubricant during vulcanization, put into a full mold and then with some sixteen to twenty similar molds is placed in a hydraulic press or heater and vulcanized. In this method also an inflated air bag is often substituted for the iron core inside the tire.

Building up a fabric tire piece by piece of fabric and rubber requires great skill and dexterity. If the strips of fabric overlap ever so little there is a ridge; if they fail to meet the fraction of an inch there is a hollow, and in curing these irregularities become hidden weaknesses. By the double cure process the advantages of both the wrapping and molding methods may be retained, at the same time obviating most of their disadvantages. In the double cure process the fabric carcass is built up on the core and the cover rubber including that for the side walls applied. The tire, still on the core, is then put into a mold and partly vulcanized in a heater or hydraulic vulcanizer press. The breaker strip and tread are next applied to the carcass, the completed tire is cross wrapped with cloth and the vulcanization completed in open steam.

After the first cure the tire carcass is removed with its core from the mold, mounted on a spider of suitable form and put in a buffing machine where that part of the periphery of the carcass to be covered by the tread is roughened. The rough surface is given one or more coats of cement and allowed to dry, when the breaker strip is applied followed by the built-up or calendered tread or endless non-skid tread band. The tread consists of a quick-curing compound applied in either a green or semi-cured state, the second cure being timed to finish the cure of the carcass and to completely cure the tread. Plain treads are usually applied green, endless non-skid tread bands semi-cured. The latter, like the carcass, are buffed on the under side and cemented before application to the carcass.

The second cure is commonly given in two different ways. The tire is either allowed to remain on the same core used for its construc-

HYDRAULIC HEATERS, WHERE TIRES RECEIVE FIRST CURE

tion and first cure, being cross wrapped under tension for the second cure, or the core is removed and the tire mounted on a rim, an inflated air bag being placed inside and the whole cross wrapped. The principal advantages of the latter method are the smoothing effect of the air bag on any irregularities in construction and the greater pressure obtained between tread and carcass due to air expansion in the bag while in the heater.

Complete vulcanization of the pneumatic automobile tire varies from one and one-half to three and one-half hours. In the double-cure process the period is usually divided into about two-thirds for the first cure and one-third for the second. Correct cure welds rubber and fabric into a solid whole. Over-cure makes a tire brittle, whereas under-cure leaves it soft.

The firm name, the trade name of the tire or tread, and the size are engraved in the mold and imparted to the sidewall rubber by vulcanization. The serial number and all other identification markings are embossed by a numbering machine on a strip of metal which is laid in the desired place inside the mold.

CHAPTER XXIV

TIRE FINISHING MACHINERY

Tire Finishing, Inspection and Wrapping

UPON vulcanization the tire is removed from its mold or wrappings and taken to the trimming room where the mold marks are removed. The inside of the tire is painted with a talc mixture to prevent sticking of the inner tube, and the outside is thoroughly cleaned by scrubbing. The finished product is then inspected and wrapped spirally with paper ready for storage and shipment, the paper wrapping machines being similar to the cloth wrappers employed in connection with "open cure" vulcanization. They wrap about seventy-five large tires an hour, and some are adapted to wrap several tires into a bale for shipment.

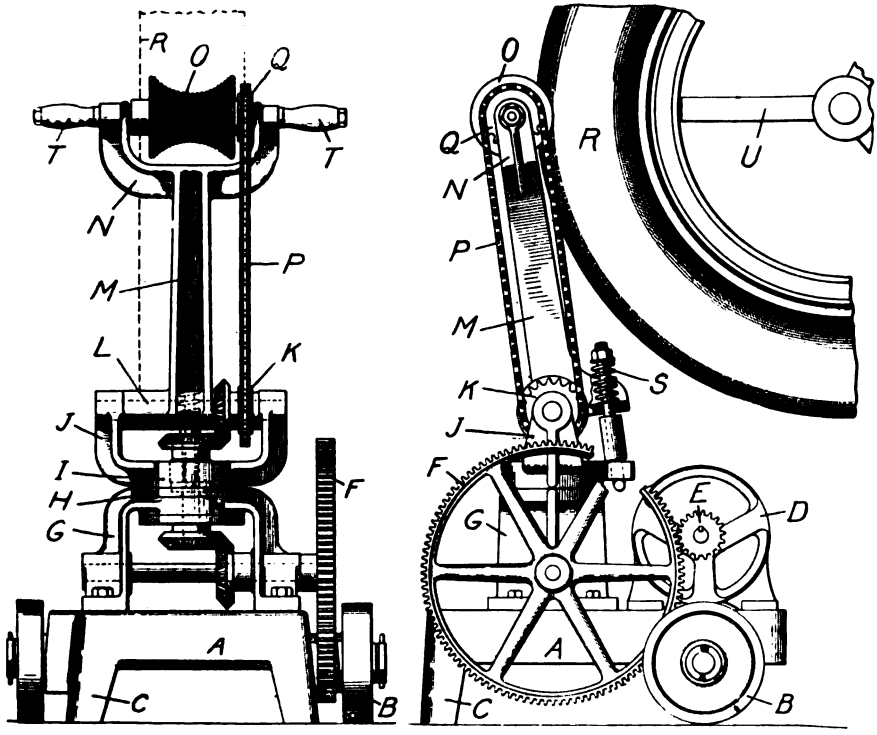

Stevens Portable Tire Buffer

Several machines and devices are employed. There are tire strippers for removing clincher tires from solid cores; buffers for cleaning full molded tires; machines to facilitate the inspection of tire

AKRON TIRE BUFFER AND CLEANER

casings for imperfections; spot vulcanizers for repairing imperfect tires and tubes; devices for weighing tires and tubes to check up the uniformity of the product; cutters for preparing tire sections showing construction for display purposes; and paper cutters, winders and wrappers for packing tires for storage and shipment.

STEVENS PORTABLE BUFFER

In applying the breaker strip between the fabric or cord carcass and the tread, the under layer of cushion stock is applied and roughened by hand with a coarse rasp to provide a better adhering surface or machine buffed. The drawings on page 541 show two views of a portable buffer designed to do this work more quickly and effectively. The machine is mounted on a truck *A* supported at one end by wheels *B* and at the other by legs *C*. On the truck is a motor *D* whose shaft carries a pinion *E* driving a gear *F*. The shaft of this gear is journaled in a pedestal *G* having a swivel plate *H* at its upper end. Above this is a similar plate *I* with a yoke *J*, forming bearings for a shaft which carries a sprocket *K*. This is driven through a set of miter

gears from the spur gear *E*. A collar *L* on the shaft carries an arm *M* having a yoke *N* at the top. In this yoke is journaled a concave buffing roller *O* driven by a chain *P* passing over sprockets *Q* and *K*. The buffer is held against the tire *R* by a spring *S*. The yoke *N* has two handles *I* by which the arm *M* may be turned on its swivel to move the buffer from side to side over the tire, while the latter, mounted on the spider *U*, is revolving. The handles may also be used to increase the pressure of the buffer against the tire.

Akron Tire Buffing and Cleaning Machine

Manufacturers of full molded tires have found that a tire buffing and cleaning machine is a very necessary adjunct to their tire building equipment. The machine shown opposite will buff-finish casings, giving the tires a clean finished appearance. It is claimed that one operator is able to handle the entire output of a large tire plant. The illustration is self explanatory and clearly shows how the machine is driven and operated.

Haskins Rubber Buffing Machine

Flexible shaft buffing equipment has come into use more recently in tire factories through its utility in removing small imperfections in

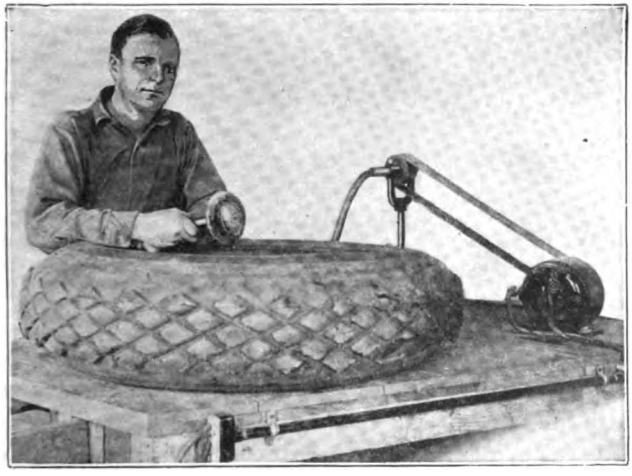

Haskins Flexible Shaft Buffer

finished tires, and for eradicating the name and serial number from defective tires which are to be marketed as seconds.

In tire rebuilding and repairing, these machines are invaluable for buffing the inside of the casing to prepare it for the reliner or inside repair. For repairing giant pneumatic tires, buffing tubes, and tool grinding, this portable device is of much practical use.

The machine here shown is furnished complete with a ¼ h. p. motor, 10 feet of cord with plug to attach to the electric lighting socket, five feet of 7/16 inch flexible shafting, grinding wheel, and felt buffing wheel.

Stevens-Steele Tire Stripping Machine

Clincher tires having an extensible bead are cured on a solid core from which the tire is stripped after vulcanization by a workman

Robertson Tire Inspector

having two hand tools with which to pry the tire up over the core. The operation is difficult, takes considerable time and cannot be performed until the cores have cooled. The Stevens-Steele machine for mechanically removing tires from cores comprises a holder for the core and a pair of tools or strippers which are forced up under the tire and gradually brought around until it is stripped from the core. In the improved form of this machine it is impossible for one operation to commence before the preceding one has been completed, thus making it nearly automatic and foolproof.

Hoyt Tire Inspecting Machine

The finished casing is passed between rollers so shaped that the tire is bulged inward, whereby the tire material is stretched and any imperfections disclosed.

Robertson Tire Casing Inspecting Machine

The tire is hung on the sliding head, which adjusts itself, and the pulling fingers are placed over the beads. Pressure applied on the foot lever spreads the beads apart and at the same time the bottom support pushed up or bulges the tread. This opens any breaks or imperfections in the fabric, which sometimes are not easily detected by the old methods. While the casing is on the machine, the hands are free to turn it and to chalk mark rim cuts, loose spots on the tread, and other defects. Blind nails are easily found and extracted while the tire is spread; tubes that are stuck to the casings are taken out, without danger of tearing; and stiff cord tires and new tubes are easily inserted or old ones removed.

Andrus Vulcanizer for Factory Damaged Goods

Tire manufacturers can make firsts out of factory damaged casings by using the spot vulcanizer here shown. The clamp carries a

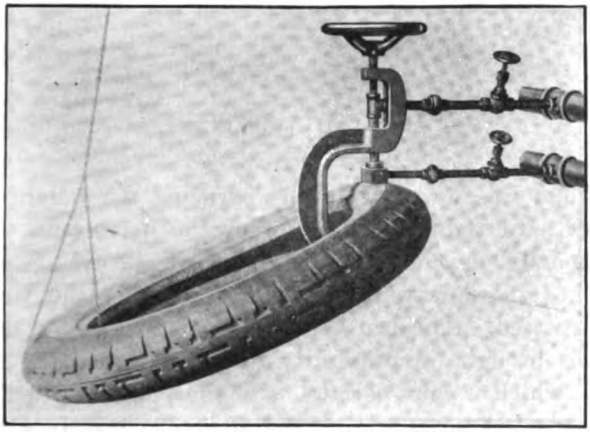

Andrus Spot Vulcanizer

steam plate 1½ by 3 inches and is provided with a rocking table inside the casing making it self adjusting to any uneven thickness. It is used in footwear and druggist sundries factories and also for repairing inner tubes.

To set up the vulcanizer, run two headers along the wall, one for steam the other for condensation. One set of headers can be used for several units placed about two feet apart. A short length of chain with a hook on the end, attached to a piece of rope from the ceiling, should be provided to hold the casing in the desired position.

Zimmerman Tire Painting Machine

The tire casing is arranged within and upon supporting pulleys or spools on pivoted arms adapted to swing inwardly or outwardly for accommodating different sizes of tires. The lower pulley is adapted to rise and fall in accordance with the swinging movement of the up-

Sprayco Tire Painter

per pulleys and this lower pulley by carrying the weight of the tire casing serves as a tightening means for the drive belt. The upper pulleys ordinarily engage with the tire casing above its center, thus serving to move it downwardly. In this manner the tire casing is continually rotated. The brush head is now swung toward the horizontal, and is brought in proximity to the tire casing. The spreading element which is now parallel with the plane rotation of the tire casing is inserted therein, and turned at approximately a right angle, whereby the tire casing is partly opened and further depression of the head causes the brush to enter the tire casing. When the brush enters the tire casing and the feed pipe is more or less horizontal, two sets of valve ports register and the paint then passes into the head and through the apertures in the presence of laterally discharging compressed air. The paint is thus sprayed upon the brush and the in-

terior of the tire casing in proximity thereto. By the time the tire casing has made several complete revolutions the interior of the tire casing will have been properly painted. The head is then moved to the raised position and the motor is stopped. The tire casing may be vertically elevated and removed from between the supporting pulleys.

Sprayco Tire Casing Painter

This is a special application of the paint gun or pneumatic painter for spraying the inside of pneumatic tire casings with soapstone paint. The outfit consists of a paint tank with the necessary valves, gages, etc., a motor-driven air compressor, a compact nozzle resembling a pistol and trigger and the rubber connecting hose for paint and air.

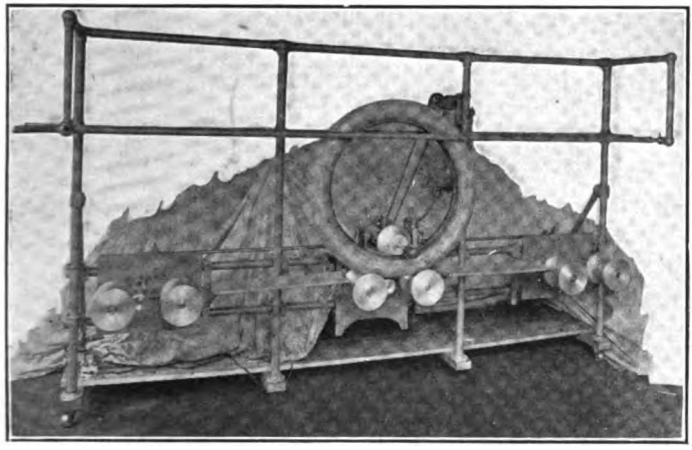

Hammel Tire Coating Machine

The paint, ready for application, is poured into the tank. An agitator is available for use when necessary. A compressed air line leads to the tank with branch lines for air and paint from tank to nozzle.

Hammel Tire Coating Machine

The outstanding features of this machine are speed of operation and simplicity. From six to ten tires per minute are lined evenly from bead to bead with a preparation that prevents adhering to the inner tube, and without wasting the liquid, thereby saving at least two-thirds of it as compared with the present hand-swabbing method. Three tires are rotated at a time in a vertical position on drums by a small electric motor. The beads of the center tire are held apart by a dished wheel

CHATILLON INNER TUBE SCALE

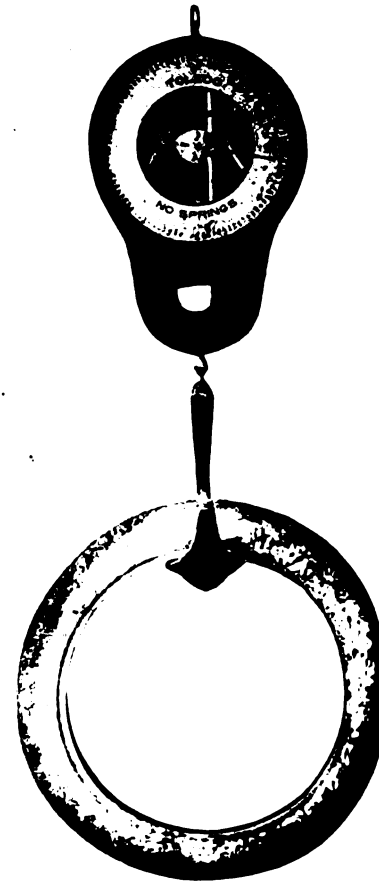

TOLEDO TIRE SCALE

having an operating handle. This permits the spraying device, which is attached to the handle, to evenly coat the inside of the tire as it revolves. The drum on the left supports the casing to be lined, while that on the right is being rotated to dry the coated casing.

When the center tire has made one revolution, the operator throws up the handle, which stops the spraying and causes all three tires to roll towards the right, thus placing another shoe in position to be coated, and rolling the finished tire into the wrapping room.

CHATILLON SCALE

Tire and tube factory methods include checking up the weight of finished tire carcasses and inner tubes to answer uniformity of product.

This is usually done on ordinary scales that have been changed over for this particular purpose.

The illustration opposite of a scale expressly designed for weighing inner tubes explains itself. For automobile tires it is made in two capacities, 10 pounds and 15 pounds, both weighing by one-half ounces. The dial of these scales is 13 inches in diameter, and fitted with a nickel-plated brass sash and glass measuring 15 inches over all. They are provided with oval-shaped brass platforms for conveniently holding the articles to be weighed.

Toledo Tire Scale

A convenient accessory to facilitate the weighing of tire casings is shown with a hanging scale. This consists of a hook of sheet metal, so formed as to receive readily and firmly hold the tire. The scale which is of the "no-spring" variety, is furnished with a 100-pound chart graduated to quarter-pound divisions, or with a 50-pound chart having two-ounce graduations if preferred. The entire arrangement can be so placed at some convenient point on the shipping room wall, that the adjustment of the tire and the reading of the register are almost instantaneous.

Peerless Tire Section Cutter

There is only one way to show a prospective buyer the construction of a pneumatic tire, and that is to exhibit a section of the actual shoe. Considering the large number of tire sections that are distributed annually, it is interesting to know just how they are produced. A machine has been especially designed for this purpose and is shown in the following illustration.

This device cuts clearly through any tire section, fabric or cord, including the steel bead inserts ordinarily used. Each cut is accurate and true toward the center of the tire, clearly showing up the tire construction. It will handle any size tire up to and including an 8-inch cross-section. The maximum width of the sample cut is three inches. An entire tire can be cut up into samples without any waste.

The machine is compactly built on a rigid base casting. The working table in front is adjusted for each size tire. The mandrel for holding the work is located above the end of the table and in line with the main bearing. The circular cutting knife rotates around the forward end of the mandrel.

In the operation of the machine a mandrel of the correct size is set up and the circular knife is advanced into contact with the mandrel. Then the limit stop on the right-hand side of the machine is set

on the feedscrew. The tire is cut and the open end is placed over the mandrel, projecting a distance beyond the knife equal to the width of the sample desired. The vise is adjusted and closed, holding the tire firmly around the mandrel. The knife advances through the work to the limit setting of the feed screw. A small amount of water from

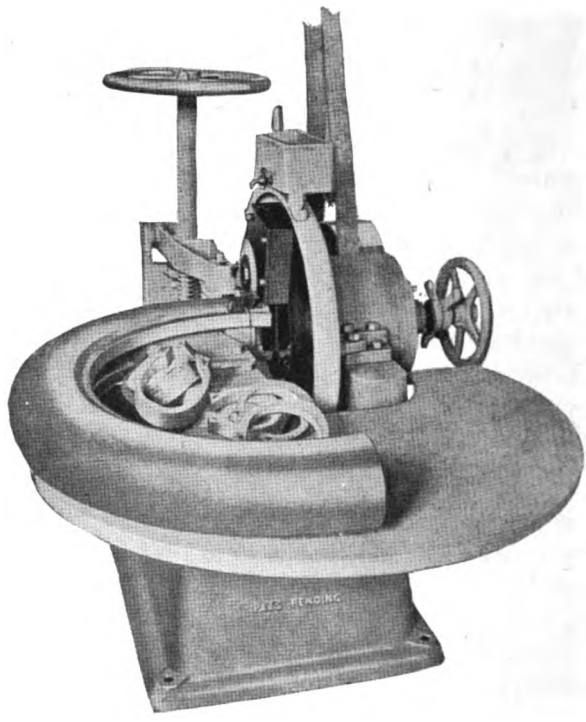

PEERLESS TIRE SECTION CUTTER

the water tank each minute insures easy cutting. Each machine is supplied with two mandrels, for 3-inch and 4½-inch tires, and two circular cutting knives.

CARLL STEEL TIRE RACKS

When pneumatic tires have been finished, inspected and paper wrapped, they are sent to the storeroom, where they are segregated according to size and type. The racks on which they are placed are often built of wood and according to the individual ideas of the executive or superintendent. It is claimed that wooden racks absorb moisture and dry out the tires to the detriment of the aging qualities

of the stock storage. However serious this may be, the substitution of all-metal tire racks for storage purposes has many advantages. For example the system here shown permits the use of standard three-tier units, 5 feet long and 10 feet high, with a capacity of 40 4-inch tires. The angle iron supporting the tires is adjustable to accommodate tires of large and small diameter in such a manner that they rest on the

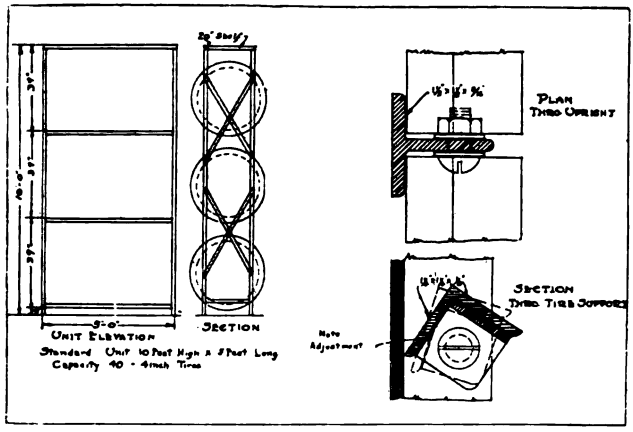

CARLL STEEL TIRE RACKS

flat surface of the angle irons. The construction is obviously strong, light and fireproof, while economy of factory space and the easy addition of units for storage extension are interesting features.

PAPER CUTTERS, WINDERS AND WRAPPERS

In addition to the machines which cloth wrap tires for open cure vulcanization, some of them paper wrapping for storage and shipment as well, there are also machines exclusively for the latter purpose. Some of these merely wrap single tires with paper, while others wrap several tires into a bale with burlap. To supply these machines with wrapping material there are also paper strip cutters and winders.

THORDARSON PAPER STRIP CUTTER AND WINDER

This is a machine that receives the paper, or thin material of a like nature, from the roll and cuts it into strips which it winds compactly on reels. Each cutter is circular and grooved, and has a hub. The edges of the cutters are shearing edges. The hubs are formed with grooved rubber rings. The two gangs of cutters are placed on parallel shafts with the cutting edges of one bearing against the rubber sur-

face of the opposite cutter. When the material passes between these revolving cutters it is cut into strips. These are wound on the reels under tension applied to the swinging reel frame by weights.

Langston Paper Slitter and Rewinder

The special feature of this machine consists in the application of a blower mechanism which delivers blasts of air through two adjustable nozzles toward the paper at a point intermediate of the cutters and the

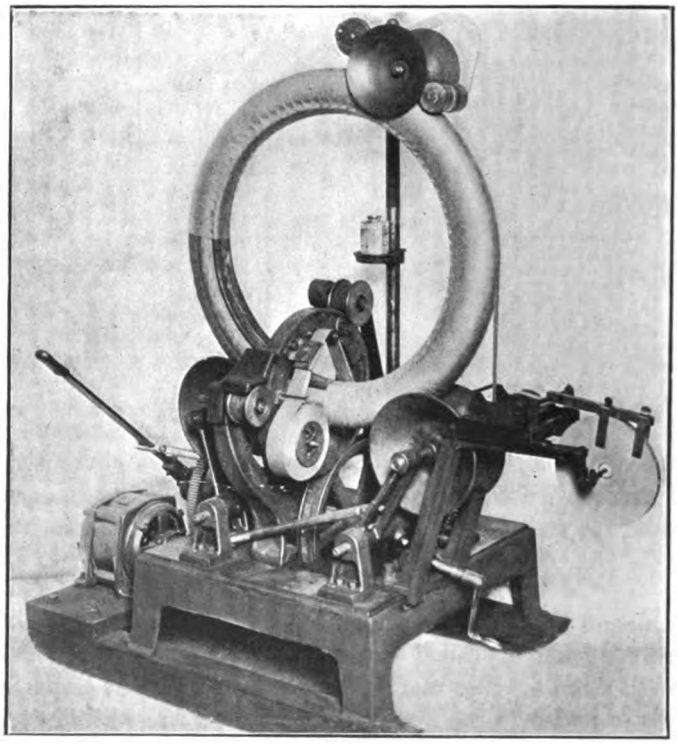

Pierce Paper Wrapping Machine

winding mechanism and adjacent to the edges of the paper strips. As the several strips into which the body of the sheet of paper has been subdivided pass from the cutters upwardly toward the winding mechanism the currents of air blow the narrow trimmings from the edges of the sheet forwardly and thus prevent them from adhering to the edges of the strips as they are rewound. Not only is the presence of these trimmings objectionable, but they increase the diameter of the

rolls of paper strips at their edges and thus prevent the winding of the strips at the center portion with the desired hardness.

Pierce Paper Wrapping Machine

The Pierce wrapping machine has a low square base on which is attached the main shaft driven through gearing by an electric motor. On the outer end of the shaft is a clutch lever for starting and stopping the machine. The two large concave rollers upon which the tire rests are supported on the bed plate by brackets and rocker arms on the concave guide rollers. The upper guide and presser roller is adjusted by a hand screw and crank at the base of the machine. The rollers are driven by suitable gearing connected with the main drive shaft. The annular ring which carries the reel of paper strip is provided with a gap, through which the tire is placed on the guide roller. This ring is driven by friction by a flared pulley on the main shaft and an endless belt, which passes over an idler pulley, causing it to bear against a portion of the surface of the annular ring. On a bracket at the right of the machine is supported a roll of gummed paper strip, which is moistened automatically and applied to the wrapper along the central periphery of the tire, acting as a binding strip. It is rolled down by the concave smoothing roller at the top of the machine. This roller also acts as a support for the top of the tire.

The tire to be wrapped is placed through the gap in the annular ring on the concave guide rollers. The upper guide and presser roller is lowered in contact with the surface of the tire and the lower rollers are adjusted by means of the screw handle.

Pierce Improved Tire Wrapping Machine

The new Pierce machine for wrapping finished tires with Kraft or string-inserted paper in 2¾ inch widths, instead of the customary 1½ inch, results in a saving of about 15 per cent on material.

A notable improvement in this machine is the head-closing device which permits wrapping the tire when the heads are drawn closely together, thus saving material and effecting a tight, permanent wrapping. Another new feature is the location of the control lever which is so placed that one operation disconnects the power, applies the brake, and opens and holds the head-closing device until the wrapped tire has been removed and another substituted.

The edge folder has also been improved and an open back type provided which is much more readily threaded than the old one. The adjusting lever at the right of the operator permits instant adjustment for any sized tire between a 2½ by 28 to a 6 by 36.

The taping attachment applies a strip of gummed tape, to the wrapping as it is being done, holding the layers together and preventing unwinding if one should break. The shuttle revolves between leather-faced pulleys which firmly support it and permit of a high speed.

This machine will wrap an average sized tire in eight seconds, and in every day use handles about 1,800 tires per day. It is driven

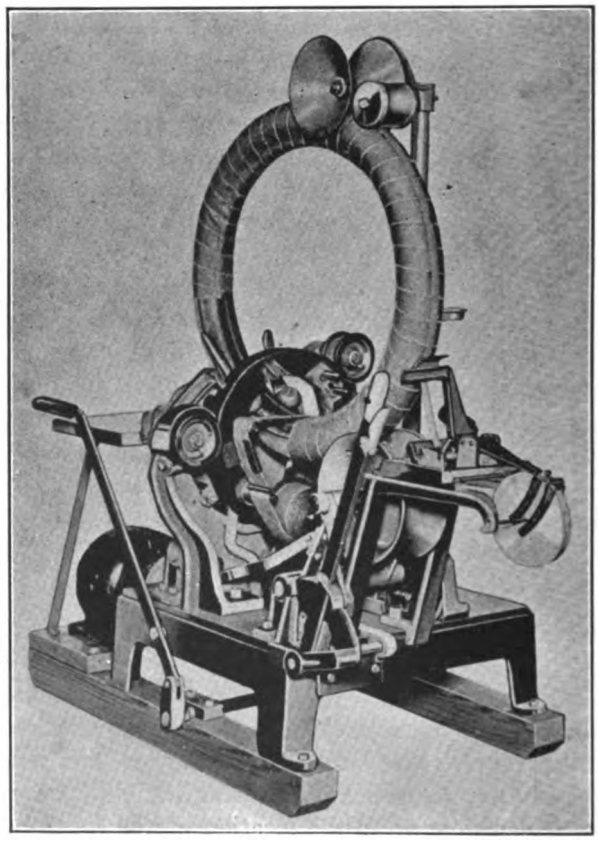

PIERCE IMPROVED TIRE WRAPPING MACHINE

by a motor directly connected, operating through a rawhide pinion, and with very little noise or vibration.

The end of the paper strip is held against the tire and the machine is started, causing the strip to be wound around the tire smoothly and evenly. At the same time the tire is rotated and when the wrap-

ped portion of the tire reaches a certain point the gummed strip is applied to hold the wrappings in place. Some machines of this type are provided with a device that lays a string of cord on the inner periphery of the tire and wraps the paper over the string, one end of which is left out. By pulling the string the layers of the paper are torn, thereby easily removing the paper wrapping when the tire is to be used.

Miller Paper Wrapper

In Miller's machine the cast iron supporting column carries at the top an annular ring having a gap through which the tire to be

Miller Paper Wrapper

covered is introduced. The roll of paper tape is mounted on the inside of this ring and is carried around the tire as the ring is revolved by an endless belt passing part way around it and over two flanged guide pulleys. The rollers which support the tire at the top are driven by worm gearing at the back of the frame. The machine is driven by an electric motor mounted on the frame near the base. By

pressing the foot lever the guide rollers are opened to receive the tire through the gap in the winding ring. When the machine is started the roll of tape is carried around the tire while the latter advances through the ring, causing the tape to be wound tightly and smoothly in spiral form about the tire. This machine will completely cover a tire with paper tape in 30 seconds.

Kuentzel Paper Wrapper

This machine consists of a horizontal, hollow, annular shuttle into which the paper strip is inserted in folds, thus eliminating the usual bobbin. The shuttle and tire revolve at right angles to each other, the strip being withdrawn from the interior of the shuttle as it is wrapped around the tire.

Terkelsen & Wennberg Paper Wrapping Machine

This machine is for wrapping bales of finished tires, hose or wire. It has a sliding table which is raised and lowered by a hand lever. The bale to be wrapped is placed on the table, which is pushed backward into proper position under the sliding head and then lowered so that it rests on the four revolving cones, automatically operated by a friction drive. This has an adjustable feed for any overlap desired.

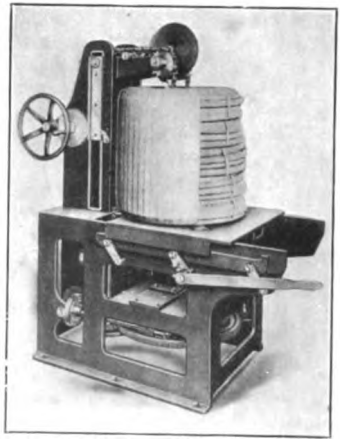

T. & W. Paper Wrapper

A roll of paper is placed between the two sprocket chains and is carried down through the inside of the bale and up around the outside, thereby wrapping the paper strip around it as it is rotated by the cones. When the bale has been completely wrapped, the head is

lowered by a hand wheel, which slackens the sprocket chain so that it can be unhooked. The table is then raised, pulled forward and the bale removed ready for shipment.

One man is capable of running 3 machines, which accomplish as much as 6 men wrapping with burlap in the old way.

TERKELSEN & WENNBERG PAPER AND BURLAP WRAPPER

A machine similar to the foregoing, but larger, will wrap at least 50 bundles per hour and make a tight, compact, evenly wrapped

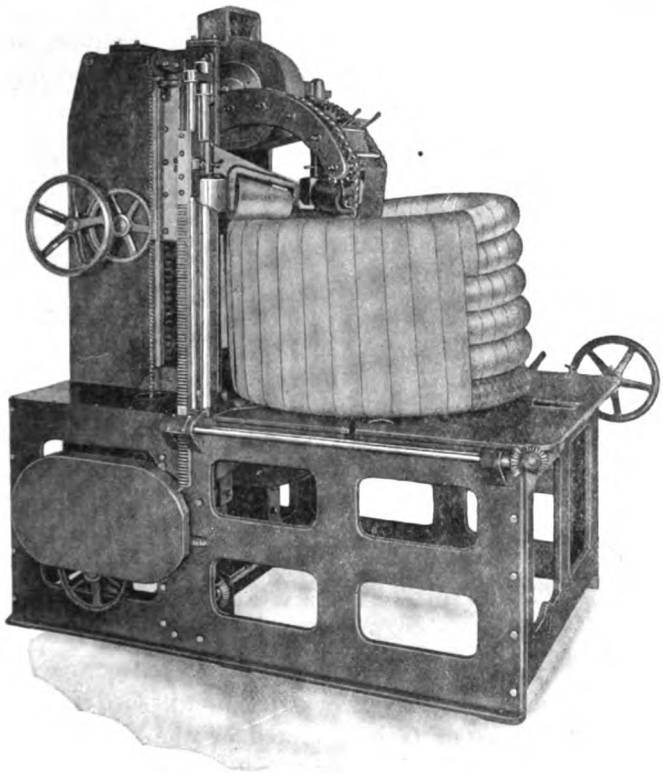

T. & W. PAPER AND BURLAP WRAPPER

bundle. It will wrap bundles 36 inches high, if desired, with paper or burlap, the tires being all of the same size or of different sizes as the case may be.

The machine is operated as follows: A roll 20 inches in diameter and 6 inches wide is placed between two endless chains, of the noiseless type, and is carried down through the inside of the bale and

upward around the outside of the bale, thus wrapping the strip of burlap or paper around the bale as it is rotated by the revolving cones upon which it rests. Two other revolving cones over the bale are so arranged that by turning a hand wheel they are made to bear down upon the bale to any degree of pressure required, insuring an even rotation and tight wrapping. The overlapping is evenly done, the width of the overlap can easily be regulated, and changing from the wrapped bale to the next one to be wrapped is instantaneous.

Midgley Paper Wrapping Machine

The illustration is a side elevation of the machine, showing a tire shoe, partly broken away, and in position for being wrapped. The

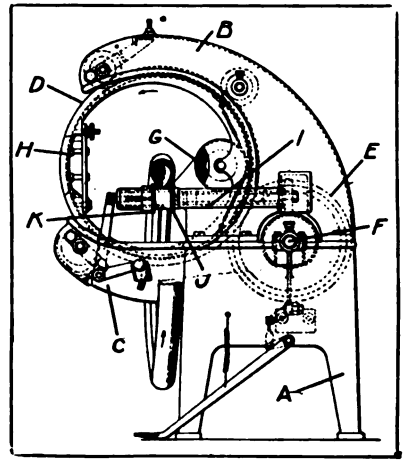

Midgley Paper Wrapper

base *A* supports two curved sections *B* and *C* between which rotates the ring-shaped shuttle *D*, driven by friction wheel *B* from the main shaft *F*. A roll of paper *G* is mounted on the shuttle that is also provided with a removable gate *H* through which the tire is introduced.

Two parallel sleeves, one of which is shown at *I*, enclose two shafts driven by worm gearing from the main shaft. Mounted on opposite ends of these shafts are hubs provided with two pairs of flanges *J* and *K*, between which the tire is gripped by a lever-controlled sliding action of the outer flanges *K*. The flanges are slightly staggered in their relative positions so that the rotating shuttle will wrap the paper strip evenly around the slowly revolving tire.

Dubey Paper Wrapper for Tires

Under Dubey's patent the strips of paper for wrapping tires for shipment are folded over once or twice on both edges to form shoulders or beads which interlock as the paper is wound spirally around a tire and prevent separation of the paper covering and exposure of the tire.

"Safepack Krepekraft" for Wrapping Tires

This is an elastic tire-wrapping paper, put up in narrow strips suitable for winding around tires so as to conform to their shape and make an absolutely smooth wrapping. It is waterproof and made in colors to add to the attractiveness of the package.

CHAPTER XXV

TIRE FILLERS

Advantages and Disadvantages

UNDOUBTEDLY the best method yet devised for securing and maintaining the resiliency of tires is the standard one of an outer casing with an inner tube filled with compressed air. But the disadvantage of this method is the liability to sudden collapse by blowouts, or the more gradual disinflation through puncture and consequent rim cuts. Inventors have turned their attention to the problem of eliminating these objections by creating substitutes, and although no such substitutes have been made which give as great and satisfactory resiliency, some of them have gained considerable popularity. The World War, however, created unusual conditions that demanded continuous and exceedingly severe tire service until both casings and tubes were entirely worn out. At the front both the Allies and the Central Powers used tire fillers and found them of value. Among the objections offered against these fillers is less elasticity. It is argued that during the action of an air filled tire, in rolling over the roads, the interior volume varies, but compressed air, being perfectly elastic and fluid, also varies, and the casing is constantly supported by the pressure of the air. With a substitute filler, there may be good pressure at first, but as it is less elastic, it slows up the action of the tire, and takes more power to drive. This tends to heat the tire, causing disintegration and faster tread wear. Another criticism is that as the tire stretches in use the filler, however elastic, does not stretch with it, so that, the casing not being held up by proper pressure, goes to pieces. And in these days of guaranteed mileage some manufacturers consider that they are justified in withdrawing their guarantee if their tires are filled with any substitute for air. They contend that a tire casing with a substance possessing a rubber-like resiliency is virtually a solid tire and would better be made wholly of rubber. Other objections are added weight of the wheels, inability to get the tires off the rims, reduction of speed, and more or less loss of elasticity.

As against these criticisms, the manufacturers of these fillers claim that initial resiliency is nearly or quite equal to air, and that this is not reduced by prolonged usage; that the fillers do not disintegrate with age; that tires so filled are not flattened by long standing;

that there is no appreciable loss of driving power or diminuation of speed, except in cases of extraordinary requirements, (no racers ever use tire fillers), and that the added weight is less than that of an extra tire or wheel, spare inner tubes, and the tool kit, all of which can be dispensed with when these fillers are used, and, moreover, the extra weight of the tires adds nothing to the load, as it is not carried by the springs, or axles, but is a rolling load resting on the road. Above all these, they claim immunity from tire troubles, the one greatest drawback to automobiling.

Fillers are of two general kinds. One is a heavy fluid which is forced either directly into the casing, or pumped into the inner tube through the valve, where it soon solidifies into a resilient, rubber-like substance. The other consists of porous rubber or other elastic compound either in one piece, (annular, or bent to shape) or molded in sections, conforming in size and shape to the casing in which it is inserted.

Liquid Fillers

While the formulae of most of these compositions are secret, the majority of them are mixtures of gelatine, glycerine, chromate salts or other chemicals, or are compounds of vegetable oils and sulphur, vulcanized at the time of injection; some of these latter having added to them finely powdered substances, such as ground cork, peat, etc.

How Tires are Filled

In filling tires or casings with these compounds, special appliances are used. It is necessary that such temperatures be maintained that the liquified material may flow freely. Another requirement is that the tires be filled to the same pressure as is directed for air. Allowance must be made for the egress of air as the liquid is forced in, and for the closing of such outlet when the tire is filled. Tubular needles, such as surgeons use, are utilized for this purpose, or tubes with the stopcocks. Some of these latter have a cup-shaped end, into which excess liquid flows, thus indicating that the tire is filled.

Filling Devices

The details may vary, but the general principle is the same at all filling stations. The composition is mixed and heated in a steam jacketed mixer provided with an automatic stirrer. The composition is run into a steam-jacketed container which can be sealed and its contents placed under a pressure of 70 to 100 pounds to the square inch. A flexible tube from this is connected with the tires. The hot liquid is forced under pressure into the tires, needle valves being pushed into

the tires, and held there by a sleeve. Then, as the liquid flows in, the air exudes through these needle valves, until the tire is filled. The valves are then closed, and the liquid is forced in until the proper pressure is secured, when the supply is shut off, the tire valve disconnected from the pipe, the needle valves removed, (which, being so small, leave holes of no importance) and the tire is left suspended until the composition cools and sets into a springy, rubbery mass.

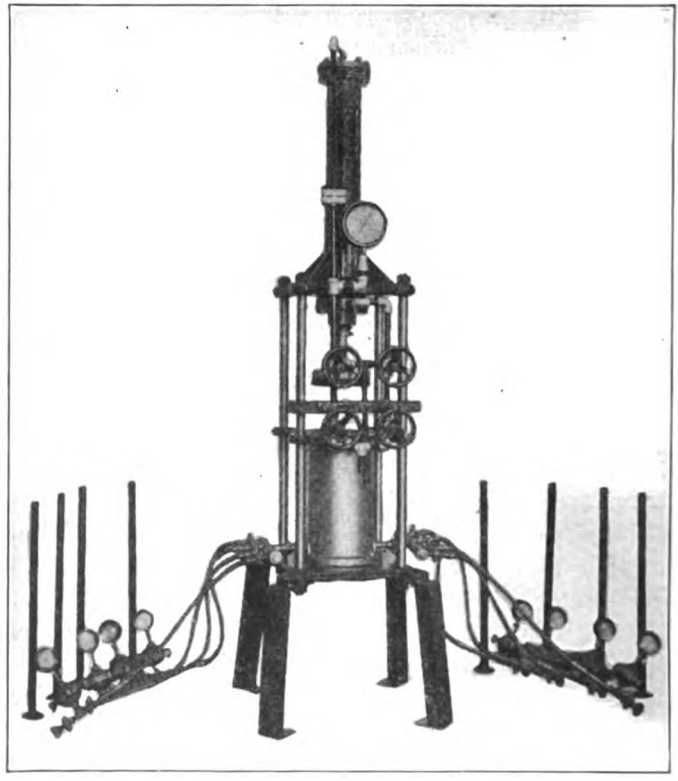

HYDRAULIC PRESS FOR FILLING TIRES WITH RUBBER COMPOUND

Patents have been taken out for filling tires loosely with various substances, such as cork, peat and the like, and then inflated with some liquified filler which solidifies on cooling. A good example of such a press is shown here. The cylinder is connected with the mixing tank. When the plunger rises it sucks the composition into the hydraulic cylinder, and a check valve prevents back flow. From here it is forced into the tires through small reinforced rubber or flexible

metal hose. There are short connections between the ends of the hose and the tires. Each hose is provided with a gauge, by which the different sized tires may be filled to the desired pressure. The illustration shows a press with connections for filling eight tires at once.

In some processes the pressure is applied by means of a pump, similar to the usual tire pump, but so jacketed that the compositiou will not cool and coagulate in the pump during the process.

Another variation in the means to apply pressure is to place inside the filling tube a flexible spiral worm similar to that used in a tubing machine. The action of such an arrangement is too well known in the trade to need special explanation. The same inventor uses a tunnel-shaped bottom to the supply-tank with an agitator fitting within it, so that the composition is kept in motion up to the instant it is fed to the flexible tube containing the worm.

Liquid Fillers on the Market

Among the many fillers of this character which have been exploited may be mentioned the following:

Rubberine is an English preparation which has been used with considerable success in military service during the World War. It is

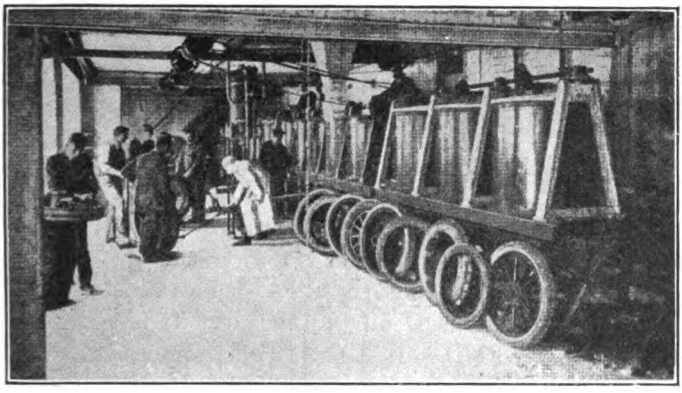

"Rubberine" Tire Filling Plant

forced directly into the casing, thus dispensing with the inner tube. It solidifies within a few hours into an elastic body, which its manufacturers claim is as resilient as an air-filled tube; that it will give 25 per cent better mileage than an air-filled tire; that it will last, without perceptible deterioration, the life any tire in which it is used, and that it keeps the tire always at full inflation pressure.

Elastes, another English preparation, is a compound of glue, glycerine and chromate salts. The ingredients are mixed hot, and forced into the inner tube, which, while being filled, is mounted inside an ordinary casing, the latter being used merely as a mold, to hold the tube in shape while the compound is solidifying, a process which takes 10 days, after which it becomes a resilient mass, somewhat similar to black vulcanized rubber. Before such a tire is placed on the wheel, a protecting cover of canvas is cemented upon the outside to prevent undue wear by friction. The process of mounting the filled tube takes

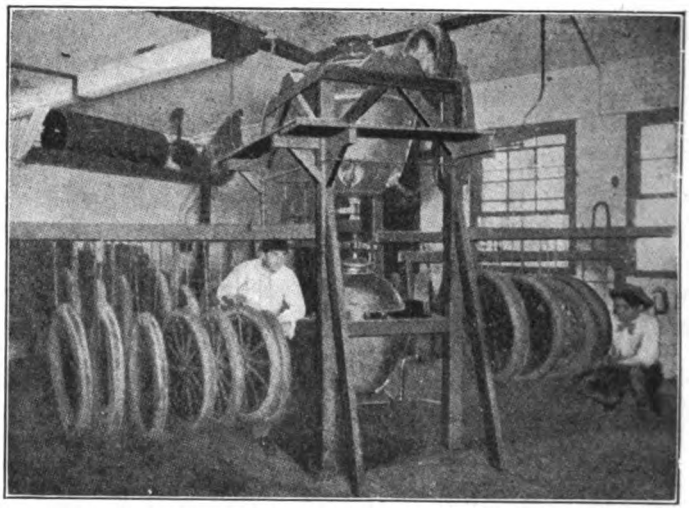

"NEWMASTIC" TIRE FILLING PLANT

15 to 30 minutes, and must be done by a skilled manipulator at a filling station of the company.

Newmastic is of American origin, and is claimed to be the earliest tire filler patented and placed on the market. It is pumped into the inner tube, where it solidifies in a short time, and remains elastic and resilient.

With this liquid filler the casings should be new, but old inner tubes may be used. Should the casing stretch excessively under severe usage, it may be hardened by pumping a further small quantity of the material into the tire. The proprietors of Newmastic recommend demountable rims for use with tires filled with their compound, and have devised a special rim which can be put on by any blacksmith or wheelright, by the use of which a filled tire can be taken off and put on as readily as a pneumatic tire. It is claimed that the Newmastic

in the tire will never harden with age or cold, and will last until there is a hole through the casing large enough to open and close as the wheel goes round. Another claim is that casings give about twice as much mileage as when filled with air, the argument being that they remain uniformly inflated at all times and are never injured by being run while deflated. The uniform inflation causes much less wear on the fabric, and fabric breaks are practically unknown. It is claimed that the increased mileage reduces tire cost about one-half, besides avoiding all the trouble of punctures and blowouts.

Everlastic is similarly forced into the tire. After 24 hours it sets into a mass and becomes permanently elastic. It is claimed not to flatten nor lose its resiliency, not to be affected by traction, or hot or cold weather, and to last until the tire is entirely worn out.

Among other fillers similar in application, though perhaps not in composition, are Elastro, Miraculum, No-air, Ezeride, etc.

Solid Fillers

Of solid devices for taking the place of air-filled inner tubes there is a multitude of varieties, both in form and composition. A large proportion of these are composed partly or wholly of rubber, but there are some which are entirely devoid of this useful material. While some of these devices or substitutes are claimed to produce fully or of nearly as great resiliency as air-filled tires, others are confessedly less elastic, but present claims of added safety, far greater durability, and increased economy.

Most of these are of two forms, an annular filler similar to an air-filled inner tube, or blocks or sections which are placed close to each other, thus filling the casing. A variation of the first named is cylindrical in form, of the right diameter to completely fill the casing, and is made of material sufficiently flexible that it can be bent to fit in place. Of such varieties, the proper length is cut and inserted in the outer shoe, and a wedge-shaped piece inserted to complete the circle.

Solid Fillers on the Market

Panama Punctureless Cushions are made of a composition which is claimed will not crumble, flatten nor harden in use, is non absorptive, is not affected by chemicals nor by frictional heat or cold. It contains no rubber. The cushions are molded in cylindrical form, the size and shape of the casing, are enclosed in cloth covers to prevent chafing, and placed in the tire in lengths, and then pressed on the wheel or rim with special tools. The filler can be transferred to a new casing when the old one is worn out.

The Dahl Punctureless Tire is made of vegetable oils and other ingredients, with which the outer casing is filled, and when filled is compressed in the casing by means of tools provided for that purpose.

It is cast in cylindrical form in sections or lengths, and being resilient it enlarges in diameter under lateral compression, the hardness of the tire depending upon the total length of the filler inserted.

The Essenkay Tire Filler is a brown flexible, highly resilient material that occupies the casings in place of the ordinary air-filled inner tube.

Jatco Tire Filler is made of a combination of vegetable oils and vulcanized the same as rubber. This must be confined and compressed in a casing, the more there is in the casing the harder the tire will be. It is guaranteed for one year by the makers.

NATIONAL TIRE FILLER

Elastic Tire Filler is supposed to resemble pure rubber, with nearly the same amount of elasticity. After prolonged runs at high speed tires become heated to a temperature of 100° to 180° F. It was with the object of finding ingredients for a preparation that would not be affected by this heat that Elastic filling was prepared.

Bettern-Air, the invention of a German chemist, is described as a vegetable compound which looks like rubber, but is far more resilient. It is made in logs about 24-inches long, of suitable diameter to fit casings. It is placed in the casings under pressure to represent any hardness of tire required, and the proprietors state that the pressure on the casing will not exceed 5 pounds to the square inch to represent 70 pounds pressure of air. It is claimed not to soften at any temperature between 0° and 250° F., nor to flatten by the weight of the car.

Kushion-Kore is claimed to resemble rubber, but there is no rubber in it, neither does it contain glue, gelatine nor glycerine in its pre-

paration, nor any substitute which will dissolve in water. It maintains its original elasticity, and is not affected by heat or cold, but remains soft, spongy and elastic. It comes in lengths of the required diameter to fill the tire, each length enclosed in a knitted covering. It is claimed that tires so filled can be subjected to the heat of vulcanization so that cuts can be repaired without injury to the core.

The National rubber tire filler is described as being made of rubber cut into small particles, treated by a special process, and molded into cylindrical annular forms, which are subsequently vulcanized. These forms are made to fit all the different casings. The filler is placed in the casing in sections, after which it is pressed on the wheel-rim by special tools provided for that purpose. Several advantages are thereby claimed—saving inner tube expense, prolonging the life of the casing, and immunity from puncture troubles.

Pneumastic is described as consisting almost entirely of rubber, with a slight proportion of other ingredients added to increase its toughness and long-wearing qualities. The manufacturers claim for it extreme flexibility, uniformity of power, and greater momentum, an entire absence of heat and friction, giving increased mileage.

Inner Tires and Cushions

While many fillers are claimed to hold their resiliency and pressure until the casings are entirely worn out, ingenious inventors have designed combinations of resilient filler and pneumatic tube, thus combining the desirable features of both. "Tire Life" is a compound which sets in a few hours like those described above, forming a firm elastic fit for the shoe. A small pneumatic tube is placed in this molded filler. It is provided with a valve which passes through the filling tube, and thus can be inflated or deflated as desired. This inner-inner tube is located in the solidified filler at the greatest distance possible from the tread, and is therefore fully protected.

On the same principle, the Airpex tire cushion is a very thick, crescent shaped interliner of vulcanized resilient compound, said to contain neither rubber, glue or glycerine, that is inserted between the casing and an inner tube of small cross section.

The Duplex inner tire is in reality a combination of ordinary inner tube and interliner, the latter being so thick to prevent punctures as almost to form a filler that converts a pneumatic into a cushion tire, while still retaining much of the resilience of the former. Under the tire tread is the semi-circular section *A*. This is a special rubber composition which is claimed not to be affected by heat, cold or moisture.

Between the filler and the rim is a protector *B* which encloses the air tube *C*. The protector is constructed of rubber and fabric, while the tube is of the usual construction but of smaller size. This inner tire can be installed in any casing and on any style of rim, and while it is

TIRE LIFE SYSTEM

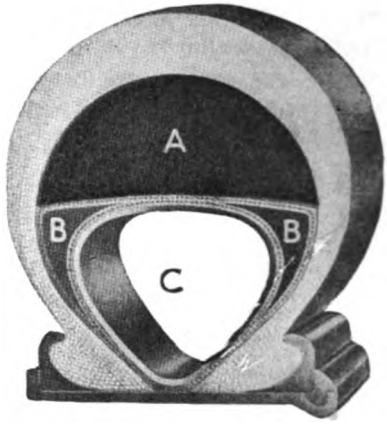

DUPLEX INNER TIRE

really pneumatic is at the same time puncture-proof, since the air tube is at a safe distance from the tread.

The Ropson non-slip unpuncturable tire is composed of a heavy-tread cover and inner air tube between which is inserted a rubber bridge work deflector so designed as to insure a great degree of re-

ROPSON TIRE

siliency. Containing scientifically planned pockets, the air tube is protected and assured of cool running. It is fundamentally a pneumatic tire, but freed from the annoyance to which ordinary pneumatics subject the user. One form is suitable for fitting to existing rims, while another requires a special rim and wheel.

Another type of inner tire consists of a solid annular core evidently designed to possess an added resiliency through having an air space on the inner side. The method of manufacture is the forcing of the liquid into a water-jacketed mold consisting of two parts bolted together, but between which is inserted a circular rim-shaped plate bearing a ring which forms the core for the interior air chamber. The liquid filler is forced into this mold, and left to solidify.

The Double service non-inflatable tube literally converts an ordinary pneumatic into a cushion tire. It is made in arch shaped cross-section to fit inside the casing and is composed of specially compounded springy rubber and fabric, of a thickness that will sustain the weight of the car and permit of displacement whenever an object

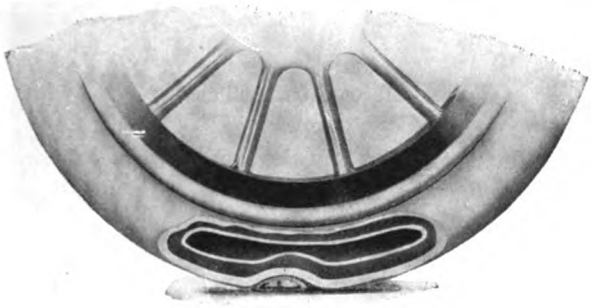

DOUBLE SERVICE NON-INFLATABLE TUBE

is passed over, exactly like a pneumatic. No inflation is required and hence there can be no blow-outs.

Miller's inner tire core is a molded rubber core of a minimum specific gravity, with air cells arranged so as to leave a brace wall between each cell. Each one of these walls has its minimum width at the free or outer end, and from this point it gradually increases in thickness toward the longitudinal strut until a maximum thickness of material is provided at this juncture to materially reinforce the core at its point of greatest strain. This construction provides a non-inflatable inner tube that may be used inside of casings.

The Bracey tire core consists of a rubber composition core of circular cross section. The inner or rim side of the filler is substantially solid, although there is a series of three longitudinal round openings beneath the surface. The outer or tread side is of cellulor structure having a series of tapered conical cells open to the surface.

The Ducos air-less inner tube is an endless band of rubber intended to replace the inner tube of an ordinary pneumatic tire. It

is constructed with transverse, lenticular openings arranged at spaced intervals proportionate to the dimensions of the casing it is intended to occupy. Elasticity is increased by the space provided between the inner circumference of the rubber band and the outer circumference of rim, thus allowing a free circulation of air that prevents heating and absorbs shocks.

The band is molded in two annular parts that are first lightly vulcanized and finally joined by pressure, either in the casing or in

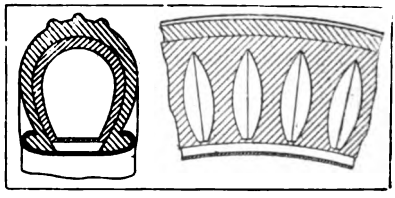

DUCOS AIRLESS TUBE

a mold. In the latter case the application of heat and pressure is employed in the usual manner and the tube is ready for use.

SPONGE RUBBER FILLERS

Sponge rubber or rubber foam is one of the exploited materials from which to make tire fillers, either annular or cylindrical. This material, which is more commonly seen in the form of rubber sponges than otherwise, is a rubber in the compound of which is incorporated some material which produces air or gas bubbles when the mixture is subjected to heat for vulcanization. The bubbles are confined by the hardened rubber, which becomes a mass exceedingly cellular, and very elastic. Or rubber compound is subjected in an autoclave of an optional gas to high pressure (80 to 300 atmospheres) and is vulcanized. Under the high pressure the gas permeates the rubber so that when vulcanization is sufficient and the pressure removed the rubber thus treated swells into a foamlike mass, the volume of which is 13 to 18 times that of the original rubber before treatment. This foam-like mass is made up of a multitude of closed cells, each of which contains, under pressure, (8 to 10 atmospheres), a portion of the gas that was forced into the rubber during vulcanization. The size of these cells and the pressure of the gas they contain may be varied indefinitely by manipulation of the manufacturing process.

A variation in the manufacture of sponge rubber, said to be of French origin, consists of taking rubber, softened by massing, and

Rubber Foam Stock Before Vulcanization — Soft Rubber Foam with Large Cells — Soft Rubber Foam with Small Cells — Hard Rubber Foam

partially vulcanized, enclosing it in a steel tube with nitrogen under a heavy pressure. The gas dissolves the softened rubber, and when the tube is opened, expands to four or five times its former volume, when it solidifies. The foregoing illustration shows how this rubber foam appears under the microscope.

To make a tire-filler of this material, rubber is so treated while in a semi-liquid condition that it assumes a frothy consistency, there being a great deal of bubble and comparatively little rubber. While in this state the rubber is vulcanized in iron molds. Upon being taken from the molds the filling expands considerably without, however, losing its shape. Placing the rubber froth in the tire necessitates a very considerable reduction in its size and a corresponding increase in pressure. It is said that the amount of rubber in the filling for a tire of a given size is about as in an inner tube for the same tire. A puncture in this filling would have no bad effect whatever, because

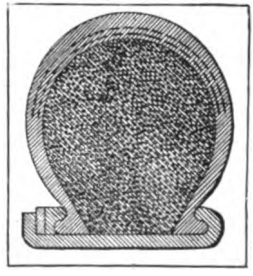

"Aero" Inner Tire

the small number of diminutive cells pierced would bear an almost infinitesimal relation to the whole number.

Pflumatic is of German origin, the invention of Fritz Pfleumer. It uses compressed air to furnish the cells in a sponge-like foam. It is composed of gelatine and glycerine, or similar substances into which the air is blown under pressure, the air being retained in the cavities when the material solidifies.

Zuber's patent solid filler consists of molded blocks of sponge rubber, the ends of which overlap when fitted within the casing. Closed air chambers in each block provide additional resiliency.

A German invention combines sponge rubber with fabric. A knitted fabric is coated on both sides with rubber solution, and a layer of rubber compound containing ammonia is coated on one side. The fabric so treated is wound into a spiral roll, but cut apart so the layers but slightly overlap, and then the cylindrical roll is bent to fit the

casing, in which shape it is vulcanized. The heat of vulcanization volatilizes ammonia in the compound, thus making the rubber spongy and additionally resilient.

A somewhat similar filler is built up of a central core of felt surrounded by thick piles of felt alternated with layers of a compound of rubber glucose and gelatine. The outside skin is of this composition. The whole is put in a mold and vulcanized under pressure.

The Rubber Ace tire filler, a substitute for the customary pneumatic tube in automobile tires, is made of sponge rubber produced by a special process which toughens it to withstand hard wear. It is molded in different sizes to fit various tires, and it is claimed that it

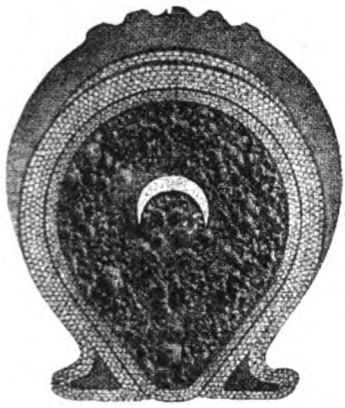

"RUBBER ACE" TIRE FILLER

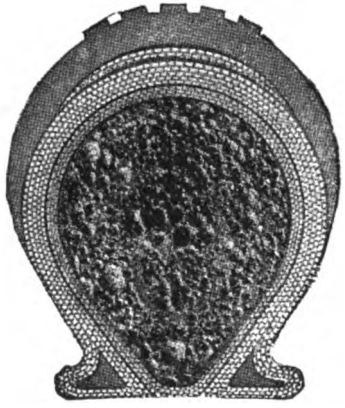

"PARCO" INNER TIRE

will not harden or crumble and will retain its resiliency, while it is not affected by natural heat or cold.

The Aero-cushion inner tire is a similar filler made for bicycles as well as for automobiles.

The Parco inner tire is shaped and enclosed in fabric. It comes in different sizes to fit all makes of standard size casings.

CORK FILLERS

A rather favorite material for filling tires is cork. This is used in several forms. One process is to fill the inner casing of proofed fabric or leather with wet compressed cork, which, being porous and full of air, has, the inventor claims, more resiliency than solid rubber, and almost as much as a pneumatic tire.

One inventor makes a filler of a series of cork disks enclosed in a cover, the cork being first boiled in a solution of soda, dried, then

in salt and water, and after boiling, yellow soap and glycerine being added.

Another filler is composed of comminuted cork, a binder of carding droppings and a rubber cement.

A New Zealand inventor has secured British patents for a filling composed of rubber, cork and leather, in small pieces, which may be mixed with French chalk, the whole held in compression by a binding of canvas, spiral strips of rubber, and an outer binding of canvas.

A somewhat complicated tire, having a tread of leather in which is inserted studs having heads filled with compressed cork or wood, and a metal lining to the casing, has an inner tube filled loosely with cork, peat, etc., and then inflated with liquid rubber substitute and air.

Another inventor has obtained a patent for a filling which is to be placed in tubes or balls to be inserted in the outer casing. This filling is of cork, powdered or in small pieces, and water. He also claims, as a part of his invention, that calcium carbide may be mixed with the cork, to produce gas on the addition of water, after which a plug and patch, hermetically sealing the holes through the material, are applied.

Other inventors mix the comminuted or powdered cork and other materials with rubber or substitute in various combinations. Infusorial earth, sawdust, refuse tan bark and wood fiber are some of the materials used to give "body" to such mixtures. Animal hide clippings cut in small pieces are also used, and in some cases advantage is taken of their gelatinous contents, to act upon them by certain chemicals.

A Scotch inventor uses moist animal hide wound under tension, and covered with a waterproof material to conserve the moisture, the whole being placed in the casing to which it conforms.

Formulae for Tire Fillers

Among the many formulae which are given for fillers, the following may be considered typical.

Filler No. 1

Glue	1 pound
Syrup	2 pounds
Glycerine	1/2 ounce
Rosin	1/2 ounce
Beeswax	1/2 ounce

Filler No. 2

Glue ..... 4 1/2 pounds
Water ..... 3 pounds
Glycerine ..... 12 pounds
Camphor (dissolved in alcohol) ..... 8 ounces
Formaldehyde (or its equivalent) ..... 8 ounces

Filler No. 3

Glycerine ..... 92 parts
Gluten ..... 8 parts

Heat the glycerine in a water bath, add the gluten, stir until thoroughly mixed.

Filler No. 4

Glycerine ..... 51 parts
Gelatine or glue ..... 23.5 parts
Water ..... 17 parts
Formaldehyde ..... 1 part
Potassium bichromate ..... 0.5 parts
Zinc oxide ..... 0.5 parts
Barium sulphate ..... 0.5 parts
Antimony tartrate ..... 0.5 parts
Magnesia ..... 5 per cent

One per cent of ether may be added.

Filler No. 5

Glycerine ..... 40 parts
Gelatine ..... 40 parts
Balsam of fir ..... 3 parts

Heat and add—

Fine cork ..... 5 parts

Stir and then add—

Potassium bichromate ..... 12 parts

Exclude mixture from action of light and air and fill tire, allowing it to set.

Filler No. 6

Rubber ..... 12 ounces
Dry cork flour ..... 3/4 to 2 1/5 ounces
Powdered aluminum flake ..... 10 1/5 to 11 3/4 ounces
Gelatinous rawhide ..... 1 1/5 to 3 1/10 ounces

Filler No. 7

Alum	4 ounces
Carbon bisulphide	1 part
Shellac (crude)	8 ounces
Gutta percha	8 ounces
Methylated spirits	1 pint

Combine with a proportion of waste cork, sawdust, refuse tan bark or wood fiber.

Filler No. 8

Crude rubber	34 parts
Infusorial earth	14 parts
Rosin oil	1 part
Flour of sulphur	4 parts
Air-slaked lime	1/4 parts
Ammonium bicarbonate	2 parts
Sodium carbonate	1 part

Filler No. 9

Dissolve 7 ounces of hard gelatine in 33 1/3 ounces of water. Melt in water bath at not over 38 degrees, add 1/4 ounce of alcohol and 3/4 ounce of coloring matter; and then add about 1 ounce of a solution consisting of 77 grains of uranium acetate dissolved in 3 1/3 ounces of distilled water and 1/3 ounce of 50 per cent acetic acid.

Filler No. 10

Soya bean oil	24 pounds
Sulphur chloride	6 pounds
Magnesium oxide	17 1/2 ounces
Venetian red	3 ounces

Sponge Rubber

Ammonium carbonate	15 1/2 pounds
Alum	3 pounds
Soda tungstate	3 pounds
Borax	5 pounds
Camphor	10 1/2 pounds
Lamp black	10 1/2 pounds
Pará rubber	50 pounds
Sulphur	2 1/2 pounds

Sponge Rubber

Alum	6 pounds
Sodium tungstate	6 pounds
Ammonium chloride	12 pounds
Borax	8 3/4 pounds
Camphor	6 pounds
Lamp black	8 3/4 pounds
Pará rubber	50 pounds
Sulphur	2 1/2 pounds

Sponge Rubber

Paulitschy's British patent is for a sponge rubber made from leather fibers, milk of sulphur, rubber solution and carbonate of ammonia, the expulsion of the last-named body at a temperature of 284 degrees F. causing the mass to assume a cellular structure.

Sponge Rubber

Soft African rubber	5 pounds
Reclaimed rubber	5 pounds
Whiting	6 pounds
Litharge	2 pounds
Palm Oil	1 pound
Sulphur	5 1/2 ounces
Damp sawdust	2 pounds

The sawdust should be fine enough to pass through a No. 20 mesh sieve. It must be thoroughly wet. The mixing is done in a cool mill. A slow cure is necessary, and the molds are cooled before opening. As the sawdust is used to carry the water which is vaporized in the curing, other ingredients may be such as fiber, substitute, etc. Brown sugar has been used for this purpose.

Sponge Rubber

Pará rubber	50 pounds
Sodium tungstate	9 pounds
Alum	2 pounds
Ammonium carbonate	14 pounds
Asbestos, finely powdered	23 pounds
Arsenic	1 pound
Gum kauri	1 pound

Sponge Rubber

African rubber	10 pounds
Litharge	5 pounds
Shoddy (mechanical or chemical)	25 pounds
Sulphur	1 pound
Damp sawdust	3 pounds
Rubber substitute	3 pounds

One leading recommendation for the use of fillers is economy. The argument is that as the filler lasts as long as the casing, and even longer, the first cost is the only one, while inner tubes need somewhat frequent patching, finally becoming useless, and require replacing several times in an equal period. The motorist whose tires are equipped with fillers has no need of repair kit, patches, cements, etc., nor a tire pump. When considered from this standpoint the somewhat high prices at which these fillers are held may seem reasonable, though apparently the cost of their manufacture might suggest profiteering. But over and above this cost must be taken into consideration the expense of installment of special apparatus and tools for inserting the fillers, the upkeep, labor, and exploitation. Every manufacturer shows many testimonials which speak of the economy experienced by the users of his product as compared with the expense of inner tubes.

The following table gives published prices per tire of various fillers. The sizes not mentioned are, of course, proportional.

Cost Per Tire for Filling

	30x3½	32x4	34x4	36x5	
Elastic tire filling	$11.00	16.00	15.00	20.00	
Newmastic	13.00	16.00	17.00	25.00	
Kushion kore	19.00	24.00	25.25	31.50	
Tire life	16.00	19.00	22.00	30.00	
Bettern air	11.00	14.00	15.00	21.00	
National tire filler	20.00	24.50	25.50	25.50	33/50
Panama punctureless cushion	9.95	13.65	15.35		
Everlastic	10.00	14.00	14.00		
Dahl punctureless tire	20.00	25.00	26.25	32.50	

Jatco tire filler from $15.00 to $36.25 for sizes from 28 x 3 to 38 x 5½.

CHAPTER XXVI

FLAPS, RELINERS AND BLOW-OUT PATCHES

IN the days when it was necessary to use lugs to hold a clincher automobile tire on the rim, the inner flap was introduced to protect the tube from being chafed by the lugs. Later in the use of stiff bead quick detachable tires, and of the large size straight tires of today, the flap was found to be the only sure way to protect the tube from being pinched by the beads. The flap overlaps the gap between the two edges of the casing to form a smooth bearing for the inner tube and prevent its being forced between the beads by internal air pressure and pinched or chafed by the flexing of the tire in operation.

The flap is ordinarily composed of laminations, each succeeding layer of fabric being slightly narrower than the one beneath, whereby it is rendered thicker along the center than at the edges, and is preferably cupped transversely to conform to the contour of the casing and tube with which it is associated in use. Although commonly separate from the tire, it is sometimes attached along one edge to the edge of the casing while the other edge of the flap is left free.

THERMOID TIRE REINFORCEMENT

Reliners or interliners for reinforcing weak tires and prolonging the service obtainable from them are much like tire flaps except that they are wider, thicker and formed to fit between casing and inner tube on the outer or tread side of the tire rather than on the inner or rim side. Blow-out patches for temporary emergency repairs are virtually short sectional reliners and are made in much the same way.

For the manufacture of tire flaps and reliner stock several special machines have been evolved.

STEVENS TIRE FLAP MAKING MACHINE

A simple and efficient apparatus for the manufacture of tire flaps is shown in the following illustration.

The motor *A* rotates the fabric spools *B, C, D, E, F, G* and *H* by pulley *I*, and chain drive to each spool. Upon the supply spool *B* is wound a strip of fabric *K* of a width corresponding to the greatest width of the flap to be produced, and upon the supply spools *C, D, E* and *G* are wound strips of fabric decreasing in width while spool *H* carries a strip slightly less in width than the bottom layer *K* of the finished flap.

Fabric from roll *B* with the strip from roll *C* are introduced between the first feed roll *L* and its pressure roll, not shown, whereby the two are brought into intimate pressure contact. This process is continued at each spool until the resultant stock passes through tension rolls to guide *M*. As the fabric passes through the guide it is drawn

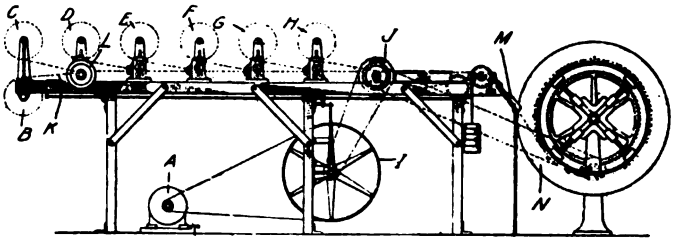

STEVENS TIRE FLAP MAKING MACHINE

into the cupping drum *N* and because of the concave shape of the bottom of the drum, will assume the desired transverse curvature which is fixed by curing.

SLOPER EXPANDING TIRE LINER MOLD

In making linings for pneumatic tires an expansive body of zinc provides for the expansion of the mold parts when heated during vulcanization.

MARSHALL TIRE FLAP VULCANIZER

Flaps are made of straight fabric instead of bias strip, formed and vulcanized on a circular-shaped vulcanizer provided with clamps accommodating a plurality of flaps.

MIDGLEY TIRE FLAP TRIMMER

The ragged excess material known as "flash" is trimmed from tire flaps by two endless band cutters that operate in a manner similar to double band saws, severing the "flash" from the flap as it passes through the machine.

Dykes Reliner Mold and Vulcanizer

A machine that dispenses with all cores and wrapping and cementing operations necessary in the old method of making reliners, patches and inner shoes, is illustrated herewith. It combines in one machine both shaping and curing, the former by hydraulic pressure and the latter by heat directly applied.

The frame and bed are solidly built of I-beams to withstand deflection common to hydraulic presses of this type. The lower platen carries the male reliner mold and is raised and lowered by three hydraulic rams. The rigid upper platen carries the female mold.

To make a complete reliner, the material is placed longitudinally on the lower mold and pressure applied to the rams which raise the lower platen and force the molds together. Heat is then admitted to

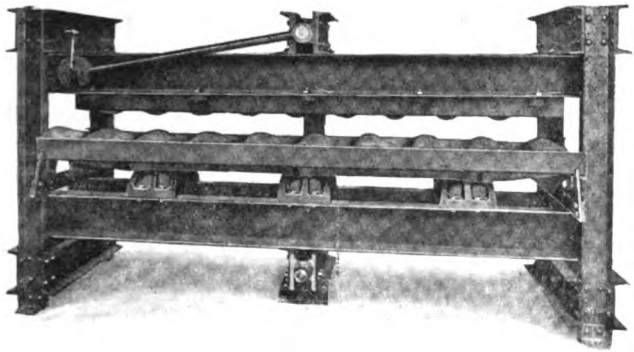

Dykes Reliner Mold and Vulcanizer

the molds and in ten or twelve minutes the cure is complete and the reliner is ready for the stock room.

One man can operate two machines and easily turn out 200 reliners a day. By doubling up—that is, molding "two on" for each heat—the capacity can be increased to 400 reliners; depending on the length of the cure. In making patches, material for 18 is placed on the mold of each machine. Allowing one hour for 5 heats the result will be 50 heats a day and the product 1,800 complete patches. The machines are made in five sizes for 3-inch to 5-inch reliners and special size for patches, double hook shoes, lace and clincher boots.

Springer Molding Machine for Reliners

This machine has two co-operating mold members, one stationery and the other movable to permit insertion and removal of the reliner material. The mold members are provided with co-operating faces

formed in a series of parallel compound curves or undulations extending lengthwise and transversely of the mold. The reliner material may be molded in the form of a long strip in successive sections or the desired number of short pieces may be placed in the mold. Within the mold members are steam chambers piped to a suitable source of supply. In order to facilitate the insertion and removal of the work the upper mold is pivotally secured to levers carried by suitable brackets on the machine, counterweights on the extended ends of the levers enabling a mold of considerable weight to be raised easily. Pressure is applied to the closed molds by four clamping members, which are pivotally supported and provided with members arranged to engage on the top of the carrier. Hand wheels on threaded stems vary the pressure at will. For simultaneous adjustment of all the clamps they are secured to a plate made adjustable relative to the top of the frame carrying the lower mold.

Western Reliner Skiving Machine

Much money can be saved in the repair shop by utilizing old tire casings for making reliners. After the tread rubber has been stripped from the carcass and the fabric strip cut to proper width it is necessary to bevel the edges of the several plies so that the repair will not permit a rough edge which would chafe the tube and cause a puncture. For the purpose this small machine operated by a hand crank has been devised. It is so geared that the work is done easily and well.

THE MANUFACTURE OF TIRE FLAPS

Hand-Made Flaps

Flap production has probably advanced more rapidly during the past two or three years than any other feature in tire manufacturing. Previously it was thought necessary to build flaps singly on a concave drum, laying up the plies in rotation by hand. This construction was known as the "endless type." The method was gradually improved by home-made devices, making use of wringer rollers which pressed the plies together, uniting them by the adhesive quality of the friction. The hand-built flap was generally cured in a press of the general design of ordinary platen presses, except that the face plates were so shaped as to give the cross-sectional curve to the flap. The defects of this method of curing were high cost per flap, due to slowness of production, and failure to impart to the flap the trans-sectional curve to perfect the proper shape of the finished goods.

Machine-Made Flaps

Machine processes have generally superceded hand methods in flap production, permitting them to be run off in continuous lengths at high speed. Various machines are employed for the purpose, namely; slitting and rewinding, flap building, flap measuring and cutting, and drum filling machines.

Rolls of adhesive friction-coated fabric in liners as received from the friction calender, with interliner of plain separating sheeting, are delivered to a slitting and rewinding machine. This is provided with adjustable circular knives by which the fabric is cut to precise widths,

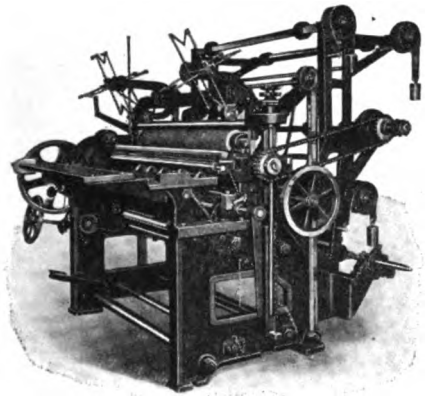

Cameron Slitter and Rewinder

then passed on through the rewinding device which separates and accurately winds the strips into individual rolls ready for making up in the flap building machine.

Flap Building Machine

In general design the flap building machine is similar to a belt folding machine. It consists of two small calenders, the first of which strips the fabric from the rolls mounted on spindles at the rear of the machines, as shown in the following illustration.

The rolls of ply stock are arranged on the spindles so that the different widths are delivered for lamination in proper sequence and are faced on both sides by single-coated plies.

Process of Building Flaps

As the plies leave the spindles they run through a set of guides, each ply of the flap passing through a separate guide in order that all

may register accurately as they unite in the laminated strip. From the guides the flap enters the first set of pressing rollers. Between the first set and second set of rollers is placed a folding device that turns over the edges of the flap. The advantage of a folded-edge flap is that the rough edges of the narrower plies are covered and thus do not come in contact with the inner tube. It also improves the appearance of the flap.

From the folding device the flap enters the second set of pressing rollers which rolls down the fold. The top roller is rubber cover-

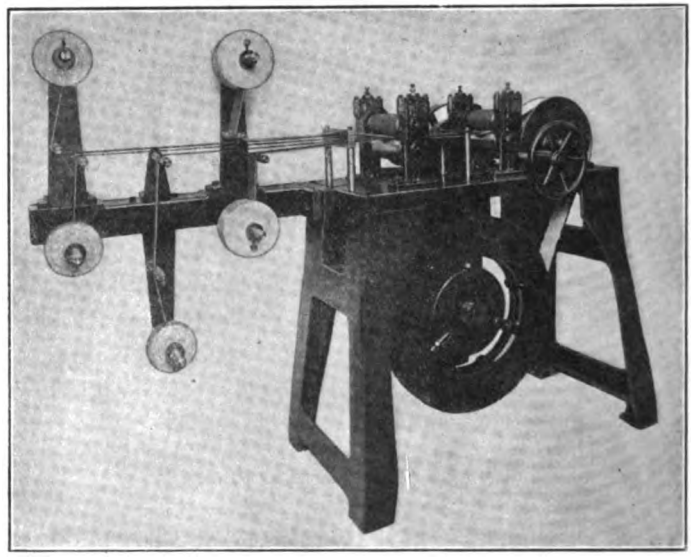

DEXTER FLAP BUILDING MACHINE

ed to accommodate the various thicknesses due to the plies varying in width and equalize the pressure across the flap.

From the second set of rollers the flap is drawn over a breaker drum, and wound on the detachable curing drum underneath the machine. The curing drum is friction-driven so that its speed is much faster than that of the machine. This allows the flap to be pulled into the drums very tightly and conform closely to the curvature of the drum. Each drum as it fills up with stock is taken from the machine and wrapped with strips of wet cloth to protect the top flap from the steam while curing.

The advantages of curing flaps in drums are numerous. First the flap is given both curves in one operation, thus insuring that the flap

will exactly fit the rim and tire. Second, on the average curing drums approximately 50 flaps can be cured at one time. The average drum is about three inches in width, which permits many drums to be placed in a vulcanizer in the same heat.

The flap making machine is driven by a direct-connected one-horse-power motor or from an overhead shaft and is speeded to produce 6,000 feet of flap per hour, either four or five ply.

Curing Drum

The curing drums upon which the flap as produced by the building machine is received are built of steel. They are so constructed,

Dexter Flap Curing Drums

as shown in the illustration, that they give the proper curves to the flap, thus insuring its fitting the tubes as well as the tire.

The drums are about 30 inches in diameter, divided into sections through the center and held together with thumb screws. This feature provides for greater ease in handling the strips of flap stock after curing, without unreeling.

Tire flaps were originated to meet the necessity of protecting the inner tube of a pneumatic tire against injury in service, from chafing on rim, tread or beads and from pinching caused by flexing of the tire walls.

Reliners are similar to tire flaps in construction, but generally wider and thicker. They are formed to fit between the casing and inner tube against the tread side instead of the rim side.

Construction

Tire flaps and reliners are of laminated construction consisting of rubberized plies of fabric built up in stepped widths. Thus the flap is thick at the center and thin at the edges, which permits it to be readily molded with crescent shaped cross section.

Referring especially to tire flaps, the concave side practically affords a continuation of the inner wall of the tire casing and accommodates the shape of the inflated tube, while its opposite convex surface is molded to seat conformably on the tread surface of the rim between the tire beads. The edges of the flap or reliner are sufficiently thin and pliable to prevent injury to the tube or chafing.

Material for Flaps

The material commonly used in the construction of tire flaps is light weight flat duck, osnaburg, sheeting or combinations of these. Sometimes cotton flannel is employed as a facing on the inner-tube side. The number of plies is usually four or five. The inner plies are, of course, friction coated on both sides only. The edges of the flaps are ordinarily two ply by the union of the fabric layers of the outer surfaces. In such case the flap has a plain cut edge. Better grades are finished on the edges by folding about one-quarter of an inch of the ply from the inner tube side on to the opposite side.

The Manufacture of Blow-Out Patches

Blow-out patches are emergency accessories that are always carried in the repair kit of every cautious motorist who anticipates the time, that usually comes unexpectedly, when the need is urgent. They are intended for an emergency repair and a protection to the inner tube in case of a blow-out or fabric break, and may be easily and quickly applied on the road.

Blow-out patches are made by tire and other rubber manufacturers specializing in tire sundries. There are two types of inside blow-out patches, the fabric and the cord. The former is intended for fabric tires and is provided with flaps that extend outwardly between the beads and the rim, thereby holding the patch firmly in place. The cord patch is designed for cord tires, although it may be used in a fabric tire repair. The cost, however, of this patch does not warrant such use, as the fabric casing break tends to increase, and therefore

should be properly repaired and vulcanized. An injury to a cord casing does not have a tendency to grow larger, hence the cord patch can be applied with cold patching cement and may wear as long as the tire. However, a vulcanized repair is undoubtedly more permanent.

While the process of making inside blow-out patches varies somewhat among manufacturers, fabric patches are usually built up from four superposed plys of bias frictioned fabric of equal width, each ply being stepped down longitudinally. The cord patch is built up from

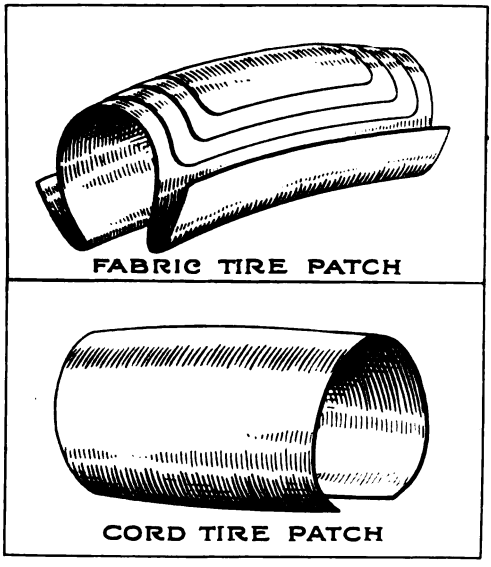

TWO TYPES OF BLOW-OUT PATCHES

bias cord fabric in the same way and the edges of both types are tapered to a fine edge.

The manufacture of blow-out patches includes the wrapped and molded processes, the former being the most commonly used method and is briefly described as follows: A roll of 13-ounce cotton duck, 35 inches wide and about 50 yards in length, is thoroughly dried to free from moisture. A length of pipe is passed through the center of the roll, which is thus placed horizontally in bearing and the free end of the fabric is passed between the middle and lower roll of the calender and fastened to the wind-up drum. Previously, the rubber stock is compounded and mixed on a two-roll mill. The formula commonly used consists of:

Smoked Sheet	22 pounds
Whiting	12 pounds
Litharge	3 pounds
Sulphur	1½ pounds

Calendering

The calendering is done on a three-roll calender. After the rubber dough has been warmed up on a special warming mill it is placed between the upper and middle rolls of the calender, and when the

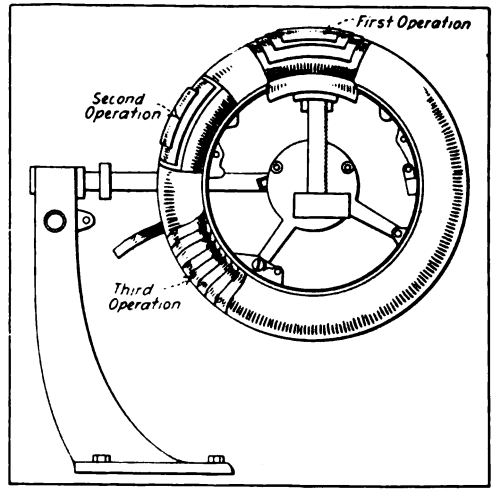

Building Up Blow-Out Patches

calender is started and adjusted, the rubber passes in a thin sheet on the middle roll which is somewhat hotter than the top roll. This sheet is transformed by pressure of the rolls to the fabric that passed between the middle and lower rolls and the frictioned-fabric is then wound up on a wind-up roller with a cotton liner between the rubber surfaces to prevent their sticking together. The speed of the bottom roll is somewhat slower than the other two for the purpose of forcing or frictioning the rubber through the interstices of the fabric.

Cutting

The roll of calendered fabric is then mounted at one end of the cutting table and a length of stock is unrolled and laid on the table, meanwhile, the liner is stripped off and wound up for further use. The stock is then cut on the bias according to the sizes required.

Assembling

The next operation is assembling or building up the patches. This is done on a hollow metal core that conforms in section to the shape of the tire casing in which the patch is intended to be used. A coating of cement is first applied to the core that is mounted on an ordinary tire building stand. The next step consists in applying the largest ply of fabric to the core, allowing the rim flaps to extend downward and overhang the inside periphery of the core. This first ply is given a coating of cement and the second ply is laid on the first, and so on until the four-ply patch is assembled. Each ply, however, should be rolled down smoothly and all air pockets between the plies carefully removed. As many patches as the circumference of the core will accommodate are built up in this way, when the flaps are dusted with soapstone and turned back against the body of the patch and the cloth wrapping applied.

Vulcanizing

The assembled, cloth-wrapped patches are now ready for vulcanizing or curing as it is commonly called. This is done in a horizontal, open steam vulcanizer. The cores, with their assembled and cloth-wrapped patches are hung on stationary metal rims within the vulcanizer and about 38 pounds of steam pressure applied for 35 minutes.

After the cloth wrapping is unwound the patches are stripped from the core and dusted with soapstone when they are ready to be marked and packed.

CHAPTER XXVII

TIRE TESTS AND TESTING MACHINES

TODAY the scientific, practical testing of rubber tires is a most important phase of the industry.

There are two general methods of testing tires; one on the road and the other in the laboratory or factory.

Road Tests

Many years ago tire manufacturers decided that the most convincing method of demonstrating the wearing qualities of a tire is to put it into actual service on the road, and road tests now form part of the United States Government specifications for automobile tires.

Dozens of rubber formulas and as many more weaves and qualities of fabric originate in factory laboratories, but it remains for service tests on the road to determine the worth of each. To this end, many of the leading tire companies have fleets of testing cars and trucks throughout the country operating from bases in the large cities where road conditions vary greatly. The service rendered by the tires on these cars is carefully tabulated and studied as a guide to improved manufacturing methods. Many of the tires are not worn out, but after having been used for a specified number of miles under certain conditions are sent back to the factory, where they undergo operations and dissections which reveal merits and shortcomings alike. The World War and the American punitive expedition into Mexico afforded exceptional opportunities for testing tires in war service, and the results were carefully observed, studied and made the most of by progressive manufacturers.

That the danger of punctures is greatly exaggerated, in the public mind, was shown by some tests made in London. A stretch of roadway was thickly strewn with broken bottles, bent nails, spikes, chisels. and other sharp objects, and over this road a racer and a touring car were driven at 50 miles an hour. The racer was soon punctured, but the touring car ran over the road a dozen times before a puncture occurred. In some skidding tests held in England, a puncture was found to have a very great effect upon the running. When a front tire was voluntarily punctured at high speed the effect upon the steering was to throw the car completely around. The tests showed the importance of the size of the hole, or the quickness with which the air

escaped, and also showed that rear tire punctures are really dangerous. A tire was also loosened at one side and allowed to come off at high speed, but the running of the car was not dangerously affected.

Many interesting traction tests have been made in England with various tires with different loads and air pressure. Most of these tests have been practically fruitless, however, even with conditions virtually identical. Some of the results are conflicting, one series of experiments being favorable to narrow tires, while some others favor wide ones. In many cases, laboratory tests, dynamometer road tests, and road tests on the basis of power or fuel consumption, all give results so unlike as to prove nothing. Dynamometer tests show results in favor of solid tires over pneumatics, under certain conditions of load, road and speed, though this is contrary to universal experience. Several French dynamometer tests have favored solids, under certain conditions, purely from the standpoint of tractive effort. Thus, a French test on good, dry macadam of 13 miles an hour, showed that the tractive resistance was for solids, 33 to 40 pounds a ton; for 3½ inch pneumatics, fully inflated, 44 to 53 pounds; same, half pressure, 53 to 61 pounds; for 4 8/10-inch pneumatics, 64 to 70 pounds per ton. Michelin's tests, at the same speed, dry road, gave the traction advantage to the pneumatic in the ratio of 25 to 30; on wet roads, the pneumatic was to the solid as 32 to 36; on quite muddy roads, the pneumatic was 35 against 43 for the solid. Thus it is seen that the two tests contradict.

The Pirelli Tests

The truth of the matter is perhaps best brought out by Dr. Alberto Pirelli, in a paper road at Milan, on the general question of rubber tires. He gave the results of many careful experiments at his factory, concluding that tests for any one quality in a tire are worthless, when standing alone. A tire which is exceptionally resilient may wear rapidly on the tread and puncture easily, though it heats little, while a tread especially made to resist wear and punctures may heat so rapidly as to destroy it. His tests showed that tires may frequently be heated up to or even above the boiling point of water, though not to the vulcanizing temperature. Four-inch tires at 45 pounds air pressure rose to 70 pounds pressure, at high speed under load; while the same tire under the same conditions, but with an initial pressure of 90 pounds, gained only 15 pounds. Other things being equal, the larger the tire, the higher the pressure, and the purer the rubber, the less is the trouble from heating; but then these are things that any motorist knows without factory tests.

Tests for Electric Vehicle Tires

A special line of tests that were instituted to determine what type of tire was best for electrically operated automobiles brought out much information of value. For example, on an absolutely smooth road, a solid tire uses up from 20 to 30 percent less power than does a standard pneumatic, and a steel tire less than that. Again, a pure gum solid tire will consume 10 per cent more current than a tire containing only 20 per cent of rubber.

The best tests that have been made have been where a certain type of vehicle has been selected, equipped with different kinds of tires, and run over the same road at a given rate of speed, and the difference in current consumed is carefully tabulated. Taking 125 as the highest efficiency possible.

A single tube thread tire rated at	121
A two-ply tire	99
A four-ply of the same make	93
Another type of thread tire	89.5
A cord tire	89
A special fabric	88
Still another cord tire	79
Another thread	75
One type of standard clincher	55
Another type	53.7
And still another	49

It will thus be seen that the type of tire has great effect upon the economy of running an electric. The tires mentioned above were supplied by a variety of manufacturers, each of whom, when they got the results of the test, set to work to build tires that would make even a better showing. It must not be thought that the tire showing the highest record of efficiency, however, is that which it is always wisest to use, because in proportion as the tire is thin walled and extremely resilient, it is so much more liable to puncture. For every-day use, therefore, the tire showing an average of 75 to 85 on the basis noted above would be the most practical.

Jumping Tests for Truck Tires

In addition to the usual road trials, pneumatic truck tires are often given special severe tests because of the excessive shocks and strains to which such tires are subjected in service. Besides gutter and curbstone tests one of the leading manufacturers features a series of gutter jumping tests in which a five-ton truck, loaded beyond its rated capa-

city was driven up an inclined platform at a speed of 17 to 20 miles an hour and allowed to jump down to the road level 1½ feet below. The jumping truck weighed 10,800 pounds loaded, and the tires used were six-inch in front and eight-inch in rear. The deflection of the tires as they struck the ground was 50 per cent of their cross-section diameter. In eight jumps, all on the same identical spot, absolutely no harm was done to the concrete road, it being found that the impact of the pneumatic tired truck on the road surface was two-thirds less than that of a solid tired truck. The eight jumps resulted in no tire trouble of any kind. The four tires were then removed from the truck and dissected to see if any breaks or scratches had developed inside the casings, but none were found.

Although in contact with the ground only part of the time, the landing strains upon airplane tires are very great. Such tires are

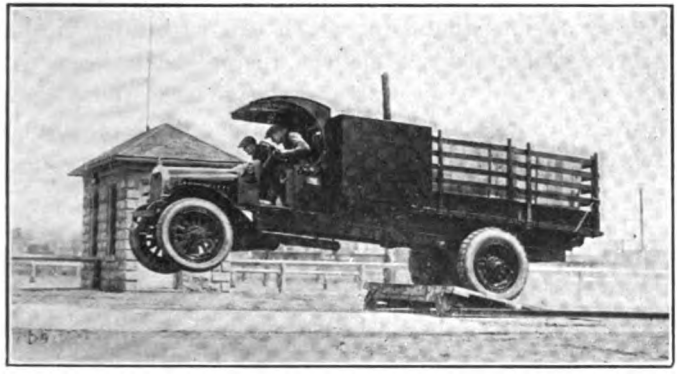

JUMPING TEST FOR TRUCK TIRES

subjected to special and severe impact, sidethrust and water pressure tests which have already been outlined in the section of Chapter XII devoted to S. A. E. Specifications for Airplane Tires.

RACING TESTS

Automobile races have long furnished an important form of practical tire tests. Relatively few motorists realize their importance or understand why so much stress is placed upon the tires used in big racing events. This is because they fail to appreciate the terrible gruelling that the tires on a racing car must undergo. The strain is almost unbelievable, however. For example, in a 250 mile race at an average speed of 60 miles an hour the tires receive harder usage than would be given them in two years of ordinary service. In a 100 mile

race a tire must make more than 60,000 complete revolutions to cover the distance at 105 miles an hour, DePalma's 1918 record at the Cincinnati Speedway. This means that the tires revolve 18 times every second, which is faster than machine guns are operated to fire 600 shots a minute. In one of the California races with cars running at about 100 miles an hour the tire pressure increased 15 pounds in six miles and the tires became so hot that no one could touch them. To figure the pressure per square inch resulting when a car weighing 2500 pounds hits a stone one inch square is to appreciate the terrible strain to which tires are subjected in races.

Only a few years ago tire changes every few minutes were the rule at most big racing events. At present the tires cause no more trouble than do any of the other parts of the car's equipment, and whole sets of tires are often completing 500 mile races without change, indicating the wonderful advancement that has been made in tire building. It is obvious that tires which can withstand the extremely exacting service demanded for modern racing have been given the supreme test and found to possess superlative materials, design and workmanship. The lessons learned on the race track continue to be of value in increasing the stability of tires for the ordinary motorist.

Factors Influencing Road Tests

The practical man is perhaps more interested in road than factory tests, as they mean more to him, because that is where he is to use them. Nevertheless, it may be fairly doubted whether the road test is really more instructive than the factory test, because of the lack of any actual basis of comparison. On the road much depends upon the driver, the weather, the varying conditions of the track and countless other things, which upset the calculations and indirectly influence the results until they have little value. The behavior of tires is positive and relative. Both are important, but only in the shop can the latter be determined with any degree of accuracy. Consequently, while not underrating the value of road tests, it is worth while to call the attention of actual and probable tire users to some of the testing machines employed in the factories where tires are made.

It would be hard to say which of the great tire centers has done the most and best work in testing. The French were first heard of in this connection, because of the publicity which they gave to their efforts. The Germans are very strong on the theory of tire construction, and are among the quickest to appreciate the value of deliberate or accidental tests made elsewhere. Still, a test is a test, wherever it

is scientifically observed and recorded. The factory tests are coming to imitate road conditions, as far as possible, at the same time keeping a basis of comparison. Consequently they are becoming of increasing interest, even to the practical man, who is more and more inclined to favor those tires whose makers attach most importance to this point.

Shop Tests

In the best modern tire factories everything is tested before it enters into the makeup of the tire. Rubber is notoriously obstinate in doing what the chemical formulas demand of it, so that experience and personal judgement are almost wholly relied upon in its manufacture. For inner tubes elasticity is the main thing, and this is shown in the stretching test. For frictioned canvas, adhesiveness is the point, while toughness is required in the thread, to resist cutting. For the canvas. strength and flexibility are the essentials, though it should also resist decay and the action of the vulcanizing and compounding ingredients; the threads must not chafe, where they overlie each other, nor must they contain air in their pores to keep out the rubber. The fabric plies must be tested for their adhesiveness to each other, and the rubber tread must stick tight to the carcass; for it is in these matters that many tires fail, long before they should be legitimately worn out. The relative and actual thickness of the rubber on the walls and tread is the result of careful tests, as is the strength of the breaker strips, the size, shape and strength of the bead, etc.

Tire Factory Laboratory Organization

The high-grade American pneumatic tire of today is a complex product resulting from continual research and testing in the laboratory and repeated inspection in the factory. Each progressive firm has its laboratory organization with a staff of trained chemists, engineers and practical rubber men ever experimenting to determine the best kinds and qualities of materials to employ and to specify exactly how each shall be used. These experts control the purchase and use of all raw materials; they determine the compounds and often the design and methods of manufacturing the product. Factory control in respect to checking up the goods in process is part of their function, and if anything goes wrong they are called upon to discover the cause and find a means of correction. New developments are studied and a watchful eye is kept on the progress of competitors.

The work of the laboratory organization in a representative rubber factory has been well outlined by H. B. Underwood in The India Rubber World. It logically comes under three heads as follows:

testing division; factory control division; development division; commercial division.

Testing Division

The work of the testing division is to insure the least possible variation in any of the raw materials that go into the tire. In general, these include rubber, fabric, compounding ingredients and solvents.

Crude rubber is tested by comparing it with the adopted standard for elasticity, tensile strength and wearing qualities. This is especially necessary in these days when plantation rubber is almost exclusively used. The variability of plantation rubber is such that every lot should be tested by taking an average sample, mixing it in a standard recipe, vulcanizing the mixing at a standard cure and getting the physical tests. From these tests the different lots of rubber are blended and a resulting mixture is obtained which has a standard tensile strength and rate of cure.

Tire fabric is made from cotton of the longest staple obtainable and is minutely examined and tested for tensile strength. The individual threads are tested for length of fiber, proper combing, twist and crimp, and the finished fabric for the number, location and tension of the threads. Each shipment of fabric is sampled and each roll used is also inspected over electric lights for defects in weaving. These tests and the manner of conducting them have been detailed in Chapter X.

Compounding ingredients are tested chemically and physically in order to insure their accomplishing the purposes for which they are intended. This is done in the chemical laboratory and consists in analysis for purity, and also the compounding and vulcanizing of certain materials for comparison with a fixed standard for color and other properties.

The wires and cables used for making inextensible bead cores, and also the bead cores themselves are tested for breaking strength.

Factory Control Division

The aim of the factory control division is to insure uniformity in the treatment of the raw materials in the factory. As a matter of daily routine, samples are taken from the goods in process at different stages and examined to see if they conform to the proper standard. After each operation of mixing, calendering, cutting, cementing, etc., inspectors test for certain qualities; the width and gage called for by specification; the smoothness, tackiness and various other qualities which skilled rubber men know by intuition. To illustrate further, a

section of a casing is vulcanized with a regular lot of casings, the section being made from the same materials as the regular output. This section is so constructed that it can be dissected easily. The component parts, tread, cushion, friction, etc., are tested physically, and also a

TEST FOR UNIFORM THICKNESS OF FABRIC PLIES

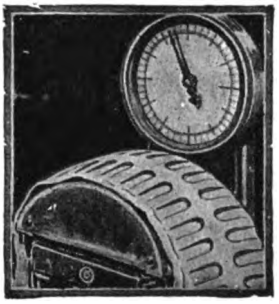

TEST ASSURING CORRECT WEIGHT AND BALANCE OF TREAD

free sulphur determination is made to see if they are properly vulcanized.

Any variation is promptly investigated, first, as to conditions in the factory, and if the trouble is not located there, it is taken up by the compounding department, in the development division. A careful watch is also kept of the various control instruments, such as com-

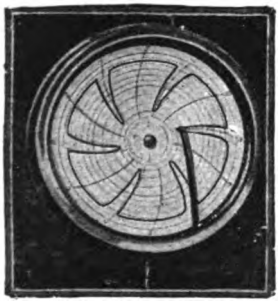

DEVICE SHOWING UNIFORM CURE

TREAD INSPECTION

pound scales, thickness gages, tension regulators, temperature controls and steam regulators. Weighing scales are freely used in order to maintain the proper balance between carcass and tread.

In tire building, other inspectors again examine the tire as it is built up by the individual workmen for the proper qualities of material and the expertness of the work. Other inspectors examine the tire

when it is ready for the curing molds for the correct size, shape and possible blemishes. It is again inspected immediately after vulcanization to discover any unusual apearance or possible carelessness of the workmen, and is finally inspected and wrapped for shipment under careful supervision. Any tire which passes the inspection of this department must be right or the tire adjusters in various parts of the

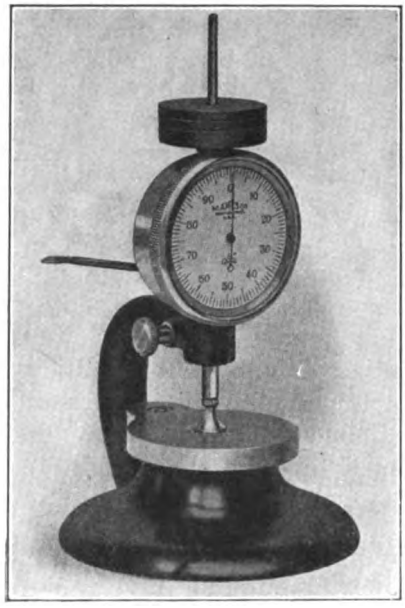

AMES RUBBER THICKNESS GAGE

RANDALL & STICKNEY GAGE

country may be called upon to answer to the customer, and this is prevented in advance so far as is humanly possible.

THICKNESS GAGES

In tire building special instruments for accurate measuring of the thickness of rubber stocks are constantly used in order to maintain the uniformity of the materials employed and thereby of the finished product.

AMES RUBBER THICKNESS GAGE

This instrument for bench use is a modification of the customary upright dial gage for sheet rubber. The pressure of the disk on the

stock is regulated by removable weights on a spindle, instead of by a spring. This feature gives the instrument adaptability in gaging soft stocks and for that reason the gage is finding favor with rubber manufacturers.

Randall & Stickney Thickness Gage

In the use of the Randall & Stickney thickness gage, the plunger is first raised by pressing down the lever on the left, and the article to be tested is placed on the table under the plunger. The lever is then gently released, when the hands on the dial register the thickness. The long hand registers the thousandths of an inch, and the small hand the tenths. By means of an adjusting screw under the table, the long hand can be brought to the proper position, when it is not on the starting point.

Ames Pocket Thickness Gage

The Ames gage is a very convenient and accurate pocket instrument for measuring the thickness of calendered sheet rubber stock. It

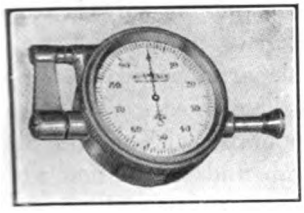

Ames Pocket Thickness Gage

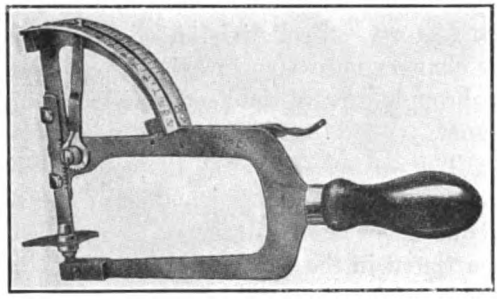

Superior Leather Gage

is equipped with jaws which have large flat surfaces designed for gauging paper or rubber, and is graduated to read in thousandths of an inch. The diameter of the dial is 1 3/8 inches, and the spindle has a travel of 3/10 of an inch.

Superior Leather Gage

The Superior leather gage may be readily adapted to the use of rubber manufacturers. It is made of nickeled steel, with a rack and gear that is practically indestructible. The pointer travels between two indexed curved plates, or indexes, that are graduated in millimeters and ounces, and for especially close work, can be furnished with indexes graduated in tenths of millimeters and half ounces.

The adjusting block on the lower jaw of the gage is made movable by the use of a ball and socket joint, which allows the jaw to accommodate itself to any variation or unevenness in the leather.

If, at any time, the pointer should not register properly, it can be adjusted by turning back the screw shown on the side, adjusting by the screw at the bottom, and then tightening up the side screw again.

The gages are made in two sizes; No. 1, which is 4½ inches, and No. 2, which is 6 inches in depth.

Development Division

The development division embraces a compounding department, research department and manufacturing laboratory.

Compounding Department

The compounding department consists of two distinct sections, one of which co-operates with the factory control division and the other works on new compounds in connection with the research department. The factory control division of the compounding department makes any changes necessary in existing compounds to correct troubles which are brought up by the factory control division and not solved in the factory.

The second section of the compounding department provides new compounds to meet the demands of the sales department, or to match the quality of competitors' goods, and also co-operates with the research department in the practical working out in compounds of the new ideas introduced by the research department.

Tire experts are all the time striving to improve their rubber compounds, and in recent years they have done so to a remarkable degree. The strongest rubber that could be made ten years ago would today be discarded for use in a modern tire. Certain ingredients mixed with rubber under certain conditions materially increase its natural strength without sacrificing its original elasticity and resilience. Different ingredients in varying proportions are constantly being tried by the chemists in tire factory laboratories and many are the tests to which the compounded gum is subjected to determine its resiliency, stretch, toughness and wearing quality in order to maintain uniformity of the stock in use and to determine the relative merits of new compounds.

Standard testing practice is indicated by the United States Government specifications for cord automobile truck and airplane tires in

Chapter XII; for fabric automobile tires in Chapter XIX; for bicycle and motorcycle tires in Chapter XXX, and for inner tubes in Chapter XXXII.

Rubber Testing Machines

For a complete review of the many rubber and fabric testing machines the reader is referred to the comprehensive chapter on that subject in "Rubber Machinery" by Henry C. Pearson. Attention is also directed to three testing devices described in Chapter X that may

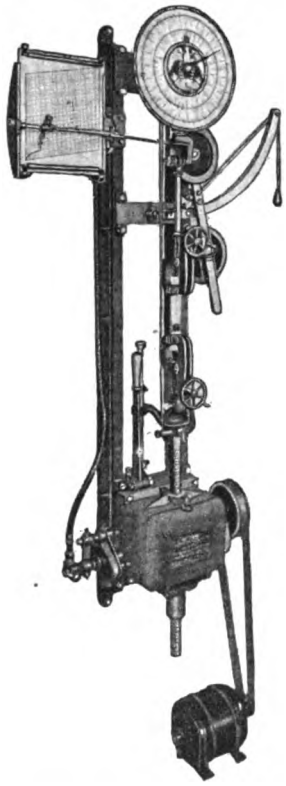

Pendulum Type Tester

be utilized for testing both fabrics and compounded rubber. They are the Scott Autographic Testing Machine, the Scott Hand-Operated Cloth or Rubber Tester and the Suter Strength and Elasticity Tester.

Pendulum Type Testing Machine

The pendulum type of testing machine has proved to be the most satisfactory form for use in rubber and fabric testing. By recom-

mendation of Committee D-13 of the American Society for Testing Materials it is destined to be adopted as standard. Certain improvements have been made during the past year in the well-known Scott machine. For testing tire cords a lighter capacity head has been developed in order that autographic records of these tests may be made. The illustration shows the machine equipped for this work, although arranged for fabric testing and not for cord.

A new testing head of 80 pounds capacity, graduated by fifths of pounds, is now available for use on rubber tests in light gages. This head has the short swing of the pendulum lever, the maximum reading of the machine being reached inside of the 36 degrees of swing of the pendulum. This machine with its recorder has also proved val-

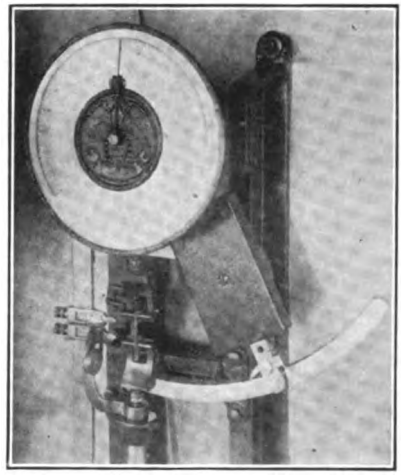

SPECIAL HEAD FOR LIGHT GAGE TESTS

uable for taking adhesion or friction tests, and for this work it is advisable to reduce the speed of the pulling jaw to one or two inches per minute. This can be done by means of special gearing which can be readily changed by the operator.

A transmission gear equipment capable of producing a wide variety has been perfected. As ordinarily built it is arranged to give speeds of the pulling jaw of the machine of one, two, six, 12 and 20 inches per minute. With a machine equipped with such a gear box, autographic recorder and various styles of clamps, it is possible to do a wide range of testing on a large variety of materials. The recorder has been arranged to stop at the time of reverse of the machine, and is reset by the operator.

The Venturi or capillary type of pen has proved the most satisfactory form. With suitable ink this pen is capable of giving long service at one filling and a dry record as soon as it can be removed from the machine.

Shore Scleroscope

The standard Shore scleroscope is now provided with a special hammer for use in testing the rebound of cured rubber, in place of the diamond-pointed hammer used on metals. This instrument is well known all over the world in connection with testing the hardness of

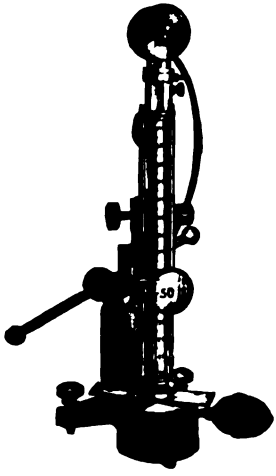

Shore Scleroscope

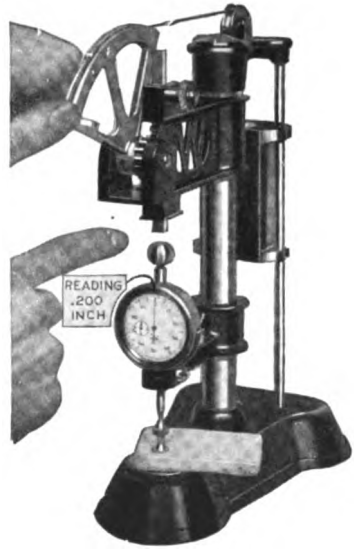

Widney Resiliometer

metals by measuring the rebound under a definite blow from a hammer raised and released pneumatically from a constant height.

The illustration shows the instrument mounted for testing small specimens. It is easily detachable from its base for operation on a swing arm for testing larger pieces on a bench. It may also be used free hand for testing still larger pieces in any location.

Widney Resiliometer

The Widney resiliometer is being adopted in rubber works laboratories for measuring the resiliency of cured rubber. The resiliometer

was originally devised to measure the thickness, hardness and resiliency of mechanical felts for gaskets, washers and piano hammers. It is essentially a combination of a dial type micrometer with a presser foot and platform upon which the material to be tested is placed and a reaction device for determining the compressibility and resilience of the material.

To determine hardness, pressure is exerted on the material under the presser foot by means of the weight attached to the quadrant which

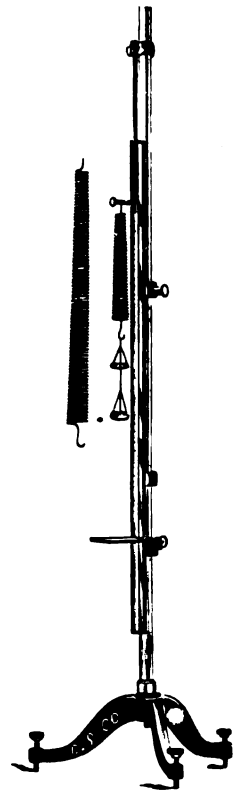

JOLLY SPIRAL BALANCE

sinks the presser foot into the material. The dial reading of thickness after compression, expressed in percentage of the reading of the original thickness, gives the degree of hardness. As the weight is removed after the hardness reading has been taken, the pressure of the weight is entirely released from the presser foot and another reading taken, thus giving the immediate resiliency of the material.

Jolly Spiral Spring Balance

The well-known Jolly spiral spring balance, useful in the rubber laboratory for determining the specific gravity of compounded rubber, has been improved to facilitate the reading of the instrument. The improvement consists of a small mirror attached to the sliding index, bearing a horizontal line etched upon it, and a device for limiting the motion of the spring.

The indicator attached to the end of the spring is a small metal disk which may be set very accurately in line with its own image and the etched line on the glass.

Research Department

In addition to the usual breaking test for strength and the stretch test for elasticity there are tests for wearing quality. For example. one company tests the relative wearing qualities of different stocks by blowing a sand blast under high pressure upon them. Under this test rubber outwears steel three to one.

The research department carries on its work in two different sections of the laboratory. In one section, which is fitted up as a chemical laboratory, the study of new ideas and the application of scientific principles to the different phases of the rubber business are worked out on a laboratory basis.

In the other section of the research department, the new ideas developed in the scientific laboratory are worked out on a somewhat larger scale so as to make it possible to use these ideas in an industrial sense instead of a purely scientific sense.

Manufacturing Laboratory

In the manufacturing laboratory the processes developed by the research department are taken over and installed on a scale sufficient to meet factory requirements; and the main manufacturing operations are carried on until the process is clearly established, when it is turned over to the factory.

For example, the research department develops a new accelerator, first, in the scientific research laboratory and then in the manufacturing laboratory where the process is worked out as it is expected to be carried on in the factory, but on a small scale.

After all troubles are eliminated, the manufacturing laboratory sets up a plant and actually supplies the factory with the quantity of material needed for several months.

When the process is working smoothly, it is turned over to the factory for commercial use.

Commercial Division

The commercial division studies new products of competing firms, making both physical and chemical tests, the results of which are given to the development department. The commercial division can also work to good advantage with the sales and advertising departments in supplying them with any needed information.

The Technical Manager

A concern large enough to maintain a laboratory with all the functions outlined above, should have an intermediate executive, known as the technical manager, over the laboratory and directly under the executive head of the factory to co-operate with the production superintendent, both being directly responsible to the factory manager.

The technical manager supervises the purchase of all raw materials going into the manufactured product, and also all the operations of the laboratory through the chief chemist. In addition, he supervises the system for testing out in actual use the products made in the factory, and has charge of collecting all data regarding the service which the products give. In the case of a tire company, the technical manager should be closely in touch with adjustment reports and should make himself thoroughly familiar with the character of service the tires give in different parts of the country. He co-operates with the production superintendent and the mechanical engineering department in any changes made in the construction and design of all products made in the factory.

In case the company has two or more factories, each should have a local laboratory with testing and factory control divisions as outlined above, but the development divisions should be located at the main office of the company, where also the technical manager will have his headquarters. From the central office, he should keep in close touch with the heads of the various laboratories and thus be in a position to co-ordinate and supervise the work of the laboratories and the purchasing department intelligently. In this manner, the purchasing department, which procures the raw materials, and the laboratory which regulates the use of those materials, work in close co-operation.

Tire Testing Machines

In the manufacture of pneumatic tires it was soon found that automobile tires are subjected to strains wholly foreign to bicycle tires. Among these is the terrific side roll met by the automobile tire in skidding and in turning corners at high speed. Unlike the automobile,

the bicycle leans, when rounding a bend, so that the strain on the tire is always vertical. This is the hardest treatment that automobile tire is ever called upon to bear, the strain affecting every part of it. It is seldom that the bead is torn off, but it will search out any weakness in the fabric, and perhaps tear the rubber tread from the canvas or separate the plies. Driving strain is also hard upon the tire, especially in sudden stops and starts. It is for this reason that the canvas layers are cut on the bias, so that the threads may lie in the direction of this tangential strain.

The Pulley Tire Testing Machine

One of the earliest testing machines for tires consisted of a pulley, to represent a road, with cross pieces at intervals to represent ob-

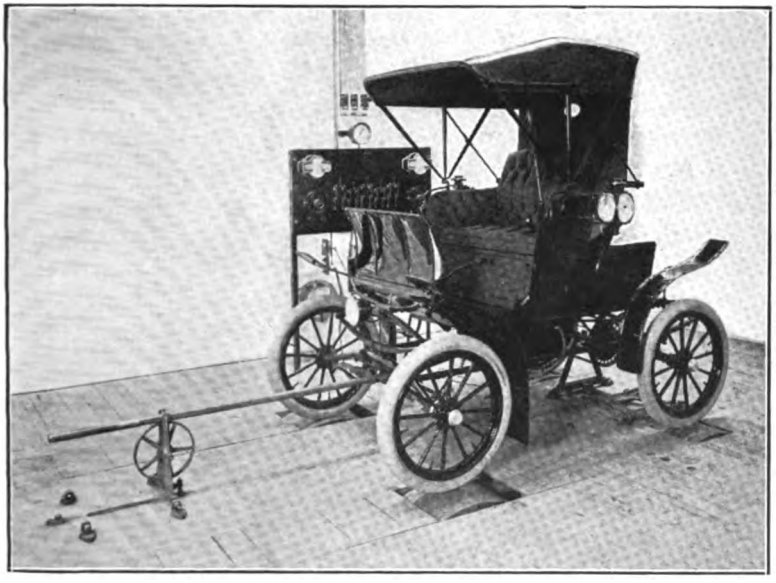

Baker Tire Testing Device

stacles encountered. Upon this ran a tire mounted upon a wheel, the wheel being weighed up to average or maximum load. When the pulley was turned, it gave the effect of a tire running over a rough road. By speeding the pulley a treatment could be given the tire which was far more severe than a rider could give it. This was merely a general strength test; and though it was sufficient for bicycle tires and wheels, it has been found of little use for automobiles, since it gives no clue

to resilience, wearing qualities, "puncture proofness", resistance to cutting, side roll, driving strain, rubber-to-fabric adhesion, or any other of the features so important in an automobile tire. This primitive machine has accordingly been succeeded by various improved devices, each of which tests a tire for only one or two qualities. For the most

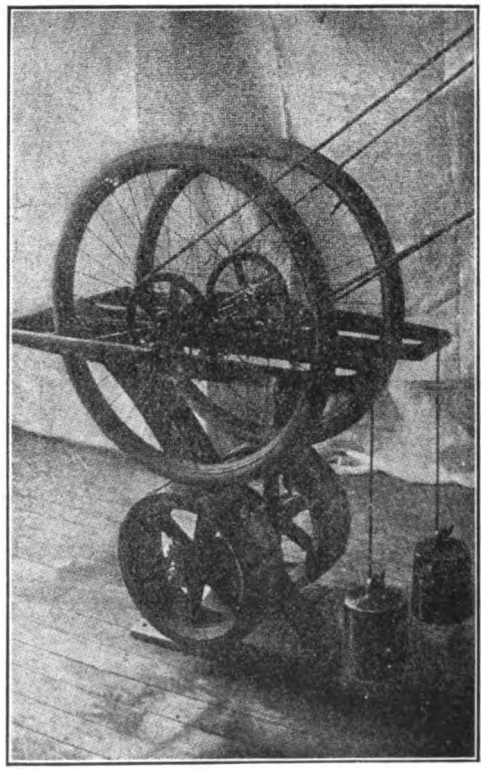

HARTFORD TIRE TESTING DEVICE

part they are intended to determine wearing quality or mileage, resilience or vibration and power consumption.

THROPP TIRE TESTER

The Thropp motor-driven tire tester is arranged to drive the tires while running against rough surfaced wheels that are provided with cross strips to similate the conditions encountered on the road. It is equipped with a speedometer giving the miles per hour and the distance traveled.

The wearing quality is figured out by means of two large weights that are moved all the way in on the bearing lever to give the same weight as on the front wheels of a normal size car, and all the way out, to give the same weight as on the rear wheels.

The bearings on the wheel shaft are roller bearing type, lubricated with compression grease cups. This machine is built to test 34 by 4 inch tires and is equipped with a 7½ h.p. motor.

Palmer Tire Tester

The Palmer tire testing machine has two movable axles, each axle driven by a separate motor. When wheels are mounted upon these axles, they can be brought together at any pressure by a heavy pendulum, the flattening of tires being a good resilience test. When one of the motors only is running, the effect is that of a smooth, level

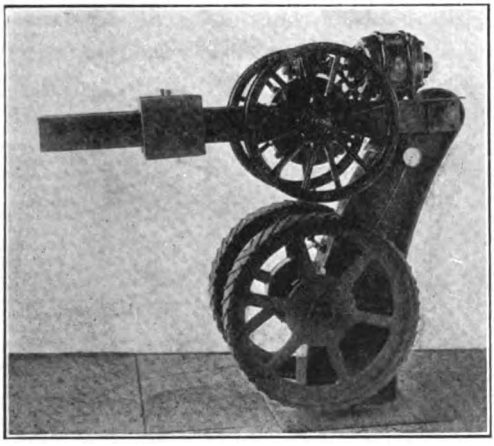

Thropp Tire Tester

road. When the pendulum is oscillated, the effect is that of a wavy road. When the tires are run together at an angle, the effect is that of turning a sharp and continual curve. Oscillation of the weight makes this a series of sharp and gentle curves in the road. By disconnecting one motor and putting the brake on that wheel, the effect is that of climbing a steep hill. When the weight is oscillated, the results are similar to a series of sudden stops and starts of an automobile, so that the tire's ability to stand driving strains is severely tested. Each motor can be used as a dynamo, when reversed, so that by using one as a dynamo and the other as a motor, the tractive efficiency of the

tire is accurately tested, at all pressures of load and air, the results being shown by a glance at the two switchboards, one of which indicates the amount of power used, while the other indicates that produced. This machine is one of remarkable interest, though the conditions are not exactly those of the road.

Veritas Road Belt

The makers of the "Veritas" tire, in Germany, in an effort to reproduce road conditions more nearly, made use of a heavy belt for a road, this belt traveling under a loaded automobile. By cementing a fine assortment of flints upon the belt, the effect given was that of an extremely severe road, which thoroughly tested the wearing qualities of the tires.

Gates Tire Testing Track

As a practical means to discover defective materials or construction, if these exist, in order that they may be remedied promptly, a Gates tire is occasionally taken from the regular output and driven on

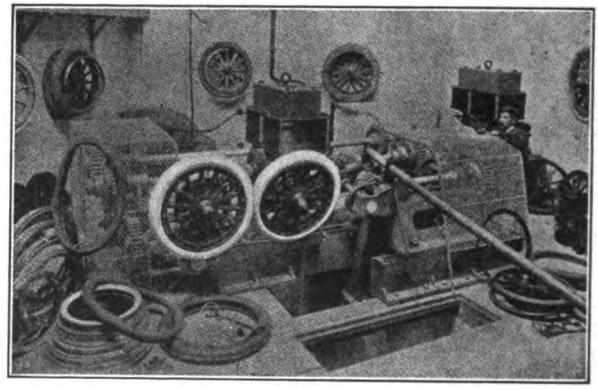

Palmer Tire Testing Device

a unique tire testing track or speedway over a surface approximating average road conditions as nearly as possible. The special machine for doing this is located outdoors on the roof of a large factory building and consists of a long arm revolving in a huge circle, on the end of which is attached the tire. A weight equivalent to that of a heavily-loaded machine is suspended in such a way that the tire itself carries the load.

The tire being tested travels on a half-mile track, which is first a stretch of cement trackway on which it attains a speed of 35 miles

an hour. It then strikes a sandy stretch which causes it to jump and skid. Then it traverses an imitation brick roadway, following which it plunges into water and mud. By way of variety an incline representing a rough mountain road is included with a 45 per cent slope. Thus, the tire continues its journey all day and every day until it it has given the maximum amount of mileage.

Duryea Resiliometer

The principles of some of the early tire testers were utilized many years ago, however, and good results obtained with very simple apparatus. Thus Charles E. Duryea made an excellent resiliometer by

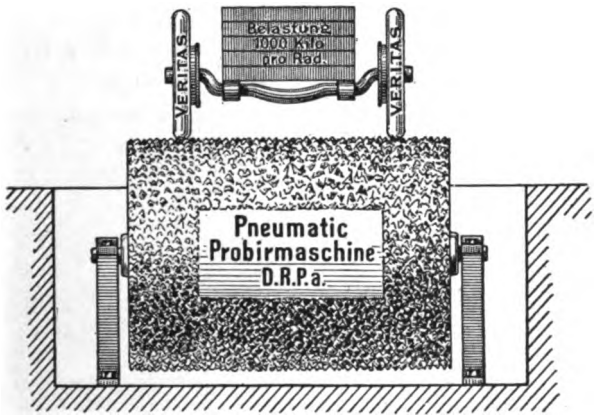

Berlin-Frankfurter Tire Testing Device

the simple expedient of fastening one end of a mock axle to a wall, with the wheel and mounted tire on the other end, which end also bore a pencil. The wheel was lifted and dropped; and when a vertical plane bearing a paper was slid past the end, the pencil recorded the number and height of the rebounds. He found that the resilience of tires varied from 90 to 55 per cent, which is more than one would expect. His tests covered many kinds of tires, with and without protective covers and armor treads. It was demonstrated that the liveliest tires were those with cross thread fabric, though this construction will not stand the driving strain in automobile tires. Mr. Duryea also originated a very neat method showing how *le pneu boit l'obstacle* (the tire drinks the pebble). A marble was put upon the floor with a piece of lead wire laid upon it. When loaded tires were run over the marble, the extent to which the wire was bent around it demonstrated that tire's ability to swallow the obstacle. Resiliometer

tests were also made by allowing the tire to bounce from an obstacle, such as an inch rod, instead of from the smooth floor. The two surfaces gave different results in resilience.

A British Resiliometer

The resiliometer used in British tire trials was something like a pile driver, in which a ram of known weight falls a known distance upon a tire of known dimensions and air pressure. One pointer registers the greatest compression from the blow, while another indicates the extent of the rebound.

Palmer Resiliometer

The Palmer Tyre Co's. resiliometer consists of a frame in which a mounted tire falls a known height upon an anvil.

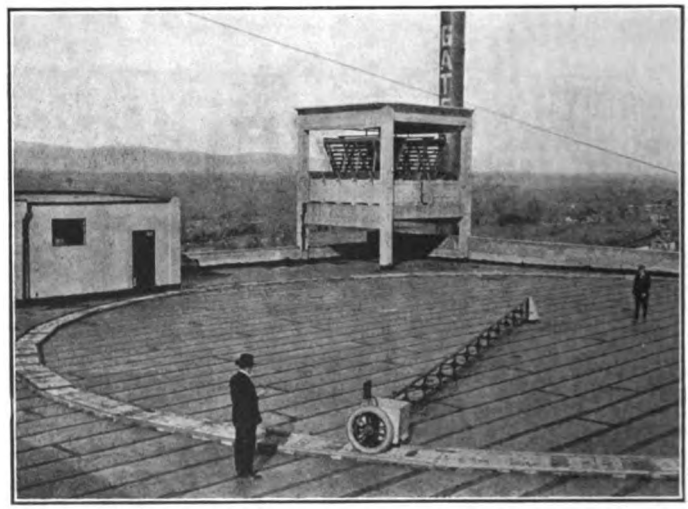

Gates Tire-Testing Track

Numerous tests have been made in order to compare different types of tires; for example, to ascertain definitely the relative efficiency of pneumatic and solid tires. In order to accurately define any strain or burden, tests of uniform nature form an indispensable condition. These, to be of utility, should as far as possible reproduce the influences to which the objects tested are subject in actual use. The value of such tests is enhanced when the comparative effects of an identical cause is shown with reference to various forms of constructive material.

Michelin Comparison of Pneumatic and Solid Tires

The importance of this principle as to the resistance of tires for trucks, has been demonstrated by the Michelin Tire Company in a series of experiments, conducted for the special purpose of proving scientifically that solid rubber is incapable of allaying vibration. Out of fifty experiments made, typical results are quoted in respect to eight, two of these results being reproduced in Figs. 2 and 3 on the following page.

A wheel (A Fig. 1) loaded with a weight of half a ton, fitted first with a solid rubber tire 2.46 inches thick and then with a pneu-

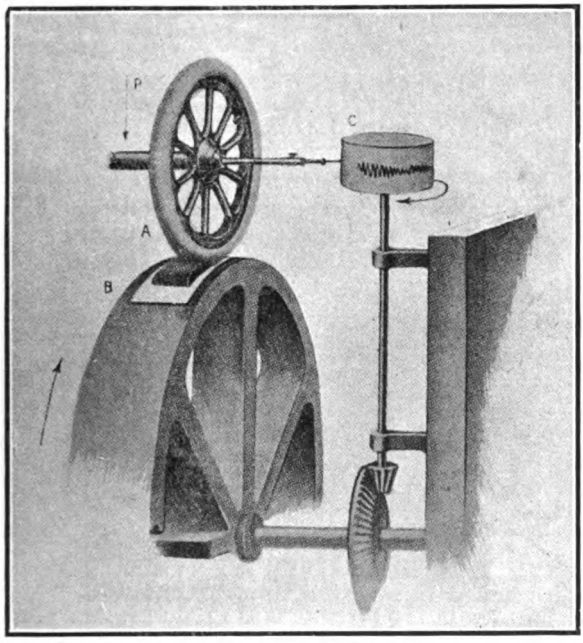

Fig. 1. Device for Registering Vibrations of Tires

matic tire, was set revolving at a speed of 16 miles an hour on a fly-wheel (B). The very broad rim of this fly-wheel was arranged to accommodate various objects which would give it an uneven surface. The displacements of the hub of the wheel (A) were registered by a pen attachment, which traced the exact height of each rise and fall on a cylinder (C) revolving at uniform speed. In this way the fly-wheel exactly represented the uneven surface of a road, while the wheel (A) played the part of a car wheel. A first examination of the

curves shows that in each instance the pen has traced the constant vibrations which in the case of the solid tire measure from 0.23 to 0.27 inch, even when no object has been placed on the fly-wheel, while they

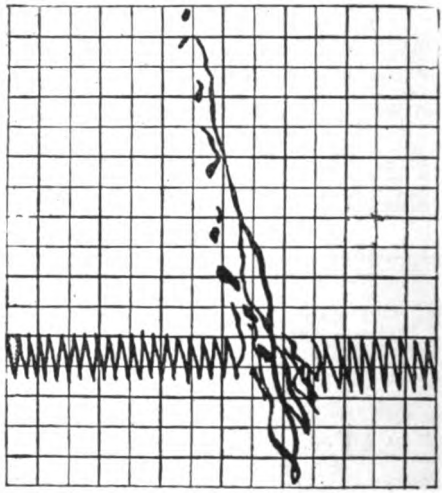

FIG. 2. VIBRATIONS OF SOLID TIRES

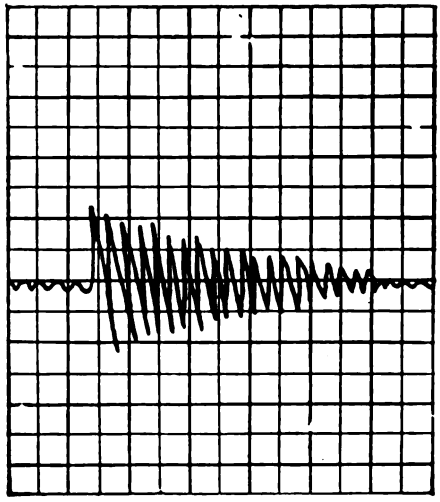

FIG. 3. VIBRATIONS OF PNEUMATIC TIRES

register only 0.02 inch with the air-filled tire. These tracings came entirely from the fly-wheel and give some idea of the work of solid as compared with air-filled tires.

Over a long half oval obstacle, 1.17 inches high, the solid tire raises the wheel 2.30 inches. Fig. 2.

Over a long half oval obstacle, 1.17 inches high, the pneumatic tire raises the wheel 0.44-inch. Fig. 3.

These diagrams indicate that the pneumatic tire absorbs the obstacle, the height to which the hub is raised being less than the height of the obstacle itself. While the solid rubber tire does not prevent the wheel from rising higher than the obstacle.

The natural advantages thus connected with pneumatic tires are accentuated by their use in the form of twin tires, when two or some-

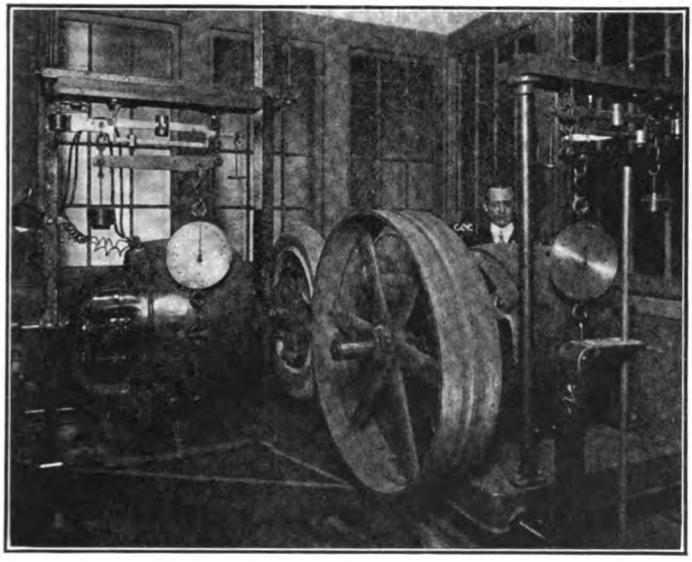

FIRESTONE TESTING DYNAMOMETER

times three pneumatic tires are placed side by side on the same wheel; the pneumatic suspension thus afforded ensuring speed with comfort and increasing the weight-carrying power.

FIRESTONE TESTING DYNAMOMETER

Loss of power due to improper tire equipment is an important subject to every motorist, particularly now that gasoline is so costly. That manufacturers have appreciated the value of scientific tire design and construction in relation to power losses is shown by the accompanying illustration of the Firestone tire-testing machine for determining the relative power efficiency of new tire designs.

The machine last pictured is known as a dynamometer, by which the amount of power required to move a tire and to keep it going is exactly determined. When a tire is placed on the dynamometer it goes through the same kind of test as though it were on a motor car on a road. In making the test the tire is placed on a wheel which is revolved by an electric motor. In close contact with the tread of the tire and acting on the same principle as a set of gears is another wheel or drum which is connected with a generator. There is a gage which registers the amount of power required to revolve the tire. On the generator is another gage which registers the power given out by the tire, and the difference between the amount of power put into the tire in order to revolve it and the amount put into the generator by the tire shows the power loss. All friction has been equalized so that the register gives the exact amount of power lost in the driving of the tire. The object of this test is to elminate features that cause power loss and to obtain a maximum speed from the motor with a minimum consumption of gasoline.

Measuring Valve Leakage

It has long been known that the best of valves will leak a little, and that this leaking varies even in the same tire at different times. Some of the German experiments have accurately measured this leakage by connecting the valve with a U-tube made by coupling several lengths of gas pipe and filling with water until the air pressure is balanced. The rise and fall of the water level, as seen in the glass tube fitted in, makes an exceedingly delicate gage.

CHAPTER XXVIII

TIRE SIZES AND INFLATION

IT goes without saying that on a vehicle of any given type, wheels of a certain size would be preferable to any other, but in most cases the ideal size has not been determined. There has been no accepted scientific law for determining the proper wheel diameter for different kinds of weights of vehicles, such details being left to chance and ultimately being governed by custom. Wheel sizes have been a matter of experiment by carriage makers for centuries, and the prevailing sizes in use on horse-drawn vehicles may perhaps be accepted as embodying the essence of superiority in this line. But it does not follow necessarily that such sizes are equally adapted to automobiles, for example.

Practical Sizes from an Economical Standpoint

In the early days of bicycling, wheels were used up to sixty inches in diameter, and it was believed that speed could be made only with large wheels. When the 28-inch wheel "safeties" came in, they were regarded as very suitable for old men or for timid persons, but not at all for racing.

A little later, however, it was discovered that the small-wheeled safeties could be propelled at a higher velocity that the older style. It must be mentioned, however, that there came in with the safety bicycle a new method of applying power to the wheel, and the pneumatic tire.

But the fact that the large bicycle wheel has gone out of use is proof of the superiority of the smaller diameters. In like manner the wheel sizes best adapted to automobiling are being determined and accepted in general practice. And in this connection must be considered the fact that the automobile wheel, heavy trucks and some electric vehicles excepted, is invariably equipped with pneumatic tires.

When the automobile makers began to put their goods on the market they seemed to feel, and in this the public agreed with them, that there was some connection between the automobile and the bicycle, and that bicycle experience was of value in the automobile business, and therefore they adopted the 28-inch wheel and the heaviest bicycle tires then available, usually a strongly constructed 2 to 2½-inch tire, such as had been used on triplets or quads. The reason for this adoption

may have been, and probably was, the fact that these tires, being standard, could be purchased more cheaply than special sizes, and therefore permitted the automobile maker to turn out his goods more cheaply. Other sizes, however, could have been had at slightly increased price and might have given greater satisfaction. Doubtless the question of price has tended to limit experimenting with larger wheel diameters, though with the introduction of automobiles of increased weight tires of larger cross section have come into use.

Economy of Larger Wheels

It has been argued that as the use of pneumatic tires smooths the road, a large wheel is not so necessary on an automobile as on an iron-tired horse-drawn vehicle; but this is not good reasoning, for the use

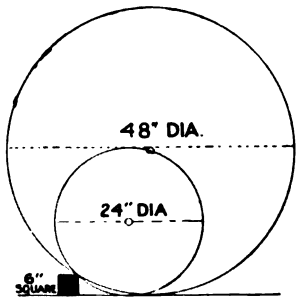

Wheel Sizes

[Two feet and four feet diameter; the small wheel must rise over the obstacle in a forward travel of about two and one-half times the height of the obstacle; the large wheel in four times the height; the jolt and strain are correspondingly less.]

of the pneumatic tire permits higher speed, and there would appear to be reason for wheel sizes to remain the same. It is true that large wheels are not so strong, relatively, as small ones, but loads much heavier than automobiles are carried on large wheels, so this need not be considered a serious difficulty.

In choosing wheel sizes for automobiles ease of riding and light road resistance are to be taken into account. It does not seem unreasonable that horse-drawn vehicle sizes should be used on an automobile where speeds are higher and the effects of rough roads more pronounced than in the horse-drawn vehicle. Railroad car wheels are commonly 36 inches in diameter, although they run on the smoothest roads in existence, and locomotive wheels, likewise traction-engine wheels, are decidedly larger. It would seem, therefore, that the 36-inch wheel is

as small as should be used under vehicles having an average weight of about 2,000 pounds. Perhaps on most roads 40-inch wheels, or even larger, would be better.

A large wheel rolls over the obstacle, and lifts the load over easily, whereas the small wheel rolls against the obstacle, jolts badly, and rises over it with difficulty. This is not only unpleasent for the passengers, hard on the mechanism, and wasteful of power, but it throws a much greater strain on the rubber tire, thus materially lessening its life, and this is a very important consideration, in view of the high cost of tires.

Air Pressure Strain on Large and Small Tires

The argument in favor of large wheel diameters, instead of increasing the width of tires, is thus expressed by Charles E. Duryea:

"Increased tire sections lessen this effect by cushioning it, but the increased wheel diameter obviates it. The air-pressure strain on the fabric of a properly designed tire is largely a matter of cross section, and a small tire on a large wheel is less likely to burst than a large tire on a small wheel. Further, the small tire does not make so wide a track, and is therefore not so exposed to likelihood of puncture as is the large tire. The large tire rolls over the sand more easily, but in going through mud or snow it meets a far greater resistance, and is therefore less economical than the small tire, particularly when wheel diameters are considered. The large wheel turns less times per mile, so its tire bends less frequently and wears longer. The large wheel with a small tire throws less mud, raises less dust, skids less, is less affected in case of a burst tire, and is generally better than the small wheel with a large tire."

TIRE LOAD

Primarily, the sizes of tires and the weight they are to carry have a close and intimate relation. There are other considerations, of course —the weight and thickness of the enveloping walls, the weight and weave of the fabric, the shape of the tire and the rim, the character of the road, and so on. But each of these is of less real importance than the weight of the load to be carried. There is an analogy between the behavior of a tire and that of any other component part of an automobile. An engine or battery that is too small for a car is being constantly overworked, and its relegation to the scrap heap comes proportionately sooner as the burden imposed upon it increases. It is quite as possible to overwork rubber, and the result is the same.

The buyer of a tire not suited to its work fails to get an adequate return for his investment, and its use is a constant invitation to disaster.

Stress Under Which Tires Work

Albert L. Clough makes this comparison of the stress under which rubber tires work on two types of motor car—a gasoline carriage weighing 1,800 pounds, equipped with a motor delivering 8 1-2 horse-power and a motorette of 750 pounds and furnishing 3½ horse-power; on the rims. These two vehicles are almost equally powered; that is, the ratio between weight and effective horse-power is the same in both. Hence the tractive stresses on the tire are naturally in proportion to their respective weights. At a low-gear speed of 8 miles per hour, the maximum tractive effort per wheel of the heavy car figures about 200 pounds, and in the moderate about 82 pounds. Assuming two-thirds of the weight of each vehicle to rest upon the driving wheels, each rear tire of the heavy carriage has to sustain a weight of 600 pounds in addition to the 200 pounds tractive effort, while in the motorette the weight per driving wheel is about 20 pounds. To secure the same factor of safety in operation, the tires of the heavy vehicle must be secured to the rims with lugs 2.4 times the strenght those employed on the motorette, and the resistance of the materials of the tires—resisting, tearing, or separation of the several layers—must be in the same ratio. In order that the tires of the two vehicles shall show the same proportion of flattening under their respective loads, with the same air pressure, their cubic content must be in the relation of 2.4 to 1; otherwise the air pressure must be increased and suitable allowance made for it. To apply this ratio, it may be noted that, supposing a tire of 2 1-2 inches to be sufficient for the lighter vehicle, one of about 3 7-8 inches would be required for the heavier one, with a proportionate increase in the strength of materials.

Weight, of course, is not the sole factor to be considered in determining the sizes of tires. The volume of compressed air within the tire, the nature and construction of the tire cover, the speed of the car, the heat generated within the tire, and the attachment of the tire to the rim also have to do with the case.

Heat Within The Tire

Compressed air in motion generates heat. The faster the speed the greater the heat; the greater the heat, the greater the strain on the tire; the larger the tire, the less the increase of heat and strain. So it will be understood that the faster the speed the greater the load per wheel and tire. If there is not sufficient volume of compressed fluid air within a tire to absorb the whole of the shock or vibration, the surplus shock is received by the cover of the tire, which dashes it to the car and

engine, causing damage to the tire and to the car in a manner similar to that in which a pool of water receives a solid body thrown into it. If the pool be small, the reception of the shock causes a violent dashing of the water against the banks; if the pool be large enough the disturbance is interceptible. As the compressed fluid air within a tire must be reached through the solid cover, it stands to reason that the cover should be as yielding, flexible and sensitive as is consistent with road wear and tear, to interfere as little as possible with quick communication of shock to the fluid cushion.

Tire Load Capacity Tables

In the first tables of load weights and tire dimensions which follow, use has been made of the figures given by some of the leading manufacturers of pneumatics, both in the early days of motor tire manufacture and the present practice:

Table Of Car Weights And Tire Sizes Of "Le Persan" Tires

(The India-Rubber, Gutta-Percha, & Telegraph Works Co.)

*Millimeters	Kilograms	Inches	Pounds
(a) 65	550	2½	1,210
(b) 90	900	3½	1,980
(b)100	1,000	4	2,200
(c) 105	1,050	4⅛	2,310
(d)105	1,200	4¾	2,640
(d)120			
(d)125	1,300	5	2,860
(d)135	1,400	5½	3,080

Capable Of Sustaining A Speed Of—

(a)	45 kilometers	(= 28 miles)	per hour
(b)	60 kilometers	(= 37 miles)	per hour
(c)	70 kilometers	(= 43½ ")	per hour
(d)	90 kilometers	(= 56 miles)	per hour

Table Of Continental Caoutchouc und Guttapercha Compagnie

	Light Tires	Pounds per Wheel
(a)	28 to 32x3¼ inches	300
(a)	28 to 32x3¼ inches	480
	28 to 32x3½ inches	660
	28 to 32x3½ inches	700

(a) For front wheels only.

Heavy Tires	Pounds per Wheel
26 to 56x2½ inches	600
28 to 46x3½ inches	950
30 to 36x4 inches	1,000
32 to 36x4¼ inches	1,140
32 to 44x5 inches	1,300
32 to 36x5¼ inches	1,400
32 to 37x5½ inches	1,760

TABLE OF TIRE SIZES, G. & J. ASSOCIATION (UNITED STATES) FOR GUARANTEES

Year Ending September 1, 1906.

Inches	Pounds per Wheel
28 to 36x2½	225
28 to 36x3	350
28x3½	400
30x3½	450
32x3½	550
34 to 36x3½	600
30x4	550
32x4	650
34x4	700
36x4	750
32x4½	700
34x4½	900
36x4½	1,000

25.4 millimeters equal one inch. To change tire sizes from millimeters to inches, divide this form by 25.4, and the result will be inches.

TABLE OF SIZES AND WEIGHTS OF MICHELIN ET CIE.—EXTRA STRONG VOITURETTE OR CAR TIRES

Type of Tire in mm.	Maximum Weight the Tire can bear Pounds	When the Tire carries Pounds	Pressure per sq. in. required Pounds	Maximum Deflection* Flat Treads Inches	Round Treads Inches
		(330 to 440	50)		
65	600	(440 to 600	64)	1¾	2
		(330 to 440	50)		
75	480	(440 to 480	57)	1¾	2
		(440 to 550	64)		
85	660	(550 to 660	71)	1¾	2⅜
		(550 to 770	51 to 71)		
90	990	(770 to 990	71 to 78)	2½	2
		(660 to 990	57 to 71)		
105	1140	(990 to 1140	71 to 78)	2⅝	2⅝
		(880 to 1100	64 to 71)		
120	1320	(1100 to 1320	71 to 78)	3	3
		(1100 to 1430	71 to 78)		
135	1490	(1430 to 1650	78 to 85)	3⅛	3
		(1100 to 1430	78)		
150	1650	(1430 to 1650	85)	4⅛	3¼

*Minimum distance between edge of rim and the ground.

INFLATION

In the tables which have been given it is assumed that the weight of the car is evenly divided between all four wheels. Of course, this is usually not the case. To determine the way in which the load is distributed, weigh first the front and then the back part of the car separately by running first one and then the other half on the platform scales. Add the two weights together, and they should correspond to the total weight of the car. The weight of one-half of the car divided by two is the weight per wheel for front or rear axle, as the case may be.

Now that the weight of load carried by each wheel is known, the correct air pressure for different loads may be ascertained by the following method suggested by the Fisk Rubber Co. Use the factor given opposite the tire size to divide the amount of the load, the result being the pressure required:

3 inch tire	Divide weight of load by 8
3½ inch tire	Divide weight of load by 10
4 inch tire	Divide weight of load by 12
4½ inch tire	Divide weight of load by 14
5 inch tire	Divide weight of load by 16
5½ inch tire	Divide weight of load by 18

Example—On a 4-inch tire you find the load to be 720 pounds. Refer to above table and note that on a 4-inch tire 12 is the factor; 720 pounds divided by 12 equals 60, therefore inflate the tire to 60 pounds air pressure.

As the load carried by the front tires is usually less than on the rear, by using the method as suggested, it will be determined that less air pressure is needed. The ideal load for the best all around results under average conditions is as follows:

Tire Inches	Pounds
3	400
3½	550
4	735
4½	960
5	1,210
5½	1,485

A load heavier than these figures may be carried, but the resulting pressure necessary to get good tire mileage is usually very hard on the car and its occupants. To obtain best results, weigh the car as suggested, divide any load by figure given and inflate to that amount; test air pressure at least once a week.

It will be seen how the weights allowable per wheel for tires of a given size differ in the several tables. It is difficult for the same factory to make two tires of exactly the came capacity. Different makes of tires may vary widely in strength, due to difference in the quality and weight of the fabric used, the treatment of the fabric, the method of building up the tire, the contour of the tire, and so on.

Charles B. Whittlesey, in an essay delivered before the American Society of Automobile Engineers, thus treats the important question of pressure:

"Tire manufacturers have found from years of experience that tires inflated to a pressure of 20 pounds per cross-sectional inch will give the longest life when driven under normal conditions. For example:

Tire Inches	Pounds
2½	50
3	60
3½	70
4	80
4½	90
5	100
5½	110

"They are trying to educate the user to see that his tires are kept inflated to this pressure by taking readings with a tire-pressure gage, of which there are several reliable makes on the market at a moderate price. Adjustments are being made on this basis. As in years gone by, many tire users do not have a pressure gage, but judge the proper inflation by kicking the tire, to see whether it is hard enough. In most cases where this crude method is used and a tire gage is afterward applied, it is found that the tires were from 30 to 50 per cent. under-inflated. There is, however, a great reduction in the number of complaints along this line today.

"Practically all the tire manufacturers use a nearly uniform table, giving the weight the different-sized tires are designed to carry at a stated inflation pressure. If tires were used in accordance with this table, the 'pros and cons' of tire inflation would be reduced to a minimum."

Mr. Whittlesey also states that not only is a tire inflated to the right degree less liable to punctures, blowouts and other tire troubles, but it is also protected against the excessive wear resulting from undue flexing, 12 to 14 per cent. of its sectional diameter being quoted as the maximum extent to which a tire should flatten at the point of contact to give good service.

Facts About Heating

"There is, moreover, less heat developed in a tire of the right size and inflation, an important factor in its longevity. The heat generated within a tire has much to do with the air pressure used—the faster the speed the greater the strain, on account of the expansion of the air within the tire. Continuous driving generates excessive heat, particularly in hot weather. Excessive heat is injurious to the shoe and causes rapid deterioration. If there is not sufficient volume of compressed air within the tire, due to using an improper size, to absorb the shock and vibration, the surplus shock and vibration is transmitted to the car, and, therefore, shortens the life of the car. The greater the volume of air in a tire the less the increase of heat and strain when driving under climatic conditions which produce excessive heat, as well as when driving at great speed or doing heavy work."

The popular fallacy that the air pressure in an automobile tire increases more on a hot than a cold day, however, has been exploded. Experiments described by F. I. Reynolds prove that the very contrary is true.

"These experiments were worked out on the basis of the proven theory that the absolute air pressure in any container, such as a tire, the volume of which remains constant, is in direct proportion to the absolute temperature.

"The absolute pressure is obtained by adding the atmospheric pressure of 14.7 pounds per square inch to the gage pressure. In order to obtain the absolute temperature, add 460 degrees to the temperature Fahrenheit, 460 degrees being what is known is the absolute zero. Applying this rule, a formula can be worked out which will give the final pressure due to increase in temperature in the tire when running.

"Actual tests show that a 34 by 4 tire inflated to a pressure of 72 pounds per square inch and run 25 miles in an hour under average conditions on a day when the temperature stands at freezing (32 degrees), the temperature will increase 35 degrees. But on a day when the thermometer is at the mean temperature (62 degrees), and the same 34 by 4 tire is given the above test of 25 miles an hour, then the increase in temperature of the tire will be 34 degrees.

"The experiments showed the final pressure in the tire to be 78.1 pounds per square inch, and the final temperature to be 67 degrees when the thermometer stood at 32 degrees, an increase of 6.1 pounds per square inch. When the thermometer stood at 62 degrees, the final temperature was 96 degrees in the tire and the pressure was 77.6 pounds, an increase of 5.6 pounds per square inch. When the thermometer stood at 90 degrees, the final temperature in the tire was 123 degrees and the pressure was only 77.2 pounds, an increase of 5.2 pounds per square inch. As a matter of fact, the increase in pressure would be slightly less than those noted above, due to a slightly greater expansion of the tire itself, caused by greater pressures.

"Of course, this heating of a tire is injurious to it, but whenever the pressure in a tire is decreased the heating of the tire is increased rather than decreased, on account of the greater bending of the tire and consequent greater friction and generation of heat.

"From the above it should be clear that the pressure in a tire should not be decreased on a hot day, as is commonly supposed, for the simple reason that it is impossible to obtain an increase in the pressure due to the heating of the tire in service, sufficient to in any way to injure it."

Inflation Tables

The B. F. Goodrich Co., 1914, after many months' careful test adopted a revised schedule as follows:

Tire Size Inches	Correct Inflation Pounds	Rear Weight Pounds	Front Weight Pounds
28x3	55	350	425
30	55	375	450
32	55	375	450
34	55	400	475
28x3½	60	400	500
29	60	425	525
30	60	450	550
31	60	475	575
32	60	500	600
33	60	525	625
34	60	550	650
35	60	575	675
36	60	600	700
30x4	70	600	750
31	70	625	775
32	70	650	800
33	70	675	850
34	70	700	875
35	70	725	875
36	70	750	900
37	70	775	925
38	70	800	950
40	70	850	1,000
42	70	900	1,050
32x4½	80	800	950
33	80	850	1,025
34	80	900	1,125
35	80	950	1,175
36	80	1,000	1,225
37	80	1,050	1,250
38	80	1,100	1,300
40	80	1,150	1,375
42	80	1,200	1,450
43	80	1,250	1,500
34x5	90	1,000	1,200
35	90	1,050	1,250
36	90	1,100	1,300
37	90	1,150	1,350
39	90	1,250	1,450
41	90	1,350	1,550
43	90	1,450	1,650
36x5½	100	1,300	1,575
37	100	1,350	1,575
38	100	1,400	1,600
40	100	1,500	1,650
42	100	1,600	1,700
37x6	110	1,550	1,700
39	110	1,600	1,750
41	110	1,650	1,800

The Firestone schedule is as follows:

Tire Size Inches	Weight per Wheel Inches	Air Pressure Recommended Pounds
28 to 36x2½	225	40
28 to 36x3	350	50
28x3½	400	60
30x3½	450	60
32x3½	550	60
34 and 36x3½	600	60
30x4	550	75
32x4	650	75
34x4	700	75
36x4	750	75
32x4½	700	85
34x4½	900	85
36x4½	1,000	85
36x5		90

These weights are for cars unloaded. For weights exceeding 1,000 pounds per wheel 5-inch tires and larger are recommended, depending upon conditions of service.

The Oversize Feature of Cord Tires

The advent of cord tires of unique construction and increased air capacity has introduced certain advisable modifications in general practice relative to inflation, which G. M. Stadelman, vice-president of the Goodyear Tire & Rubber Co. succinctly states as follows:

"As the ideal of cord construction is to secure the easiest riding our cord tires have from 10 to 30 per cent. more air capacity than our fabric tires of the same rated size. This big increase means that an equal volume of air may support the car at a lower pressure. Therefore we recommend that these tires be inflated to 10 per cent. lower pressure than indicated in the table for fabric tires.

"The oversize feature permits the car to be supported without undue side-wall flexing, and to absorb shocks better than a smaller tire inflated to a lower pressure. As tires built of cords contain no cross fibres, they flex more easily than those built of fabric having fibers running crosswise, and even if inflated to the same pressure would give easier riding—so the 10 per cent. reduction in inflation, made possible by the larger air capacity, is an appealing feature to the motorist looking for increased comfort.

"The following table shows the carrying capacity of our tires, both cord and fabric, and the proper inflation pressures for any given load. Instead of specifying a certain pressure for different sized tires, the scale provides a pressure scientifically adjusted to the load the tire carries.

CARRYING CAPACITY AND INFLATION

Proper Inflation Pounds		Carrying Capacity According to Size Inches						
Cord Tire	Fabric Tire	3	3½	4	4½	5	5½	6
27	30	250	...	...	...	...	...	...
32	35	290	360	...	...	...	...	...
36	40	335	410	500	...	...	...	...
41	45	375	460	560	675	...	...	...
45	50	415	515	625	750	875	1,000	1,140
50	55	460	565	690	825	960	1,100	1,255
54	60	500	615	750	900	1,050	1,200	1,370
59	65	...	570	815	975	1,135	1,300	1,480
63	70	...	720	875	1,050	1,225	1,400	1,595
68	75	...	...	940	1,125	1,310	1,500	1,710
72	80	...	...	1,000	1,200	1,400	1,600	1,925
77	85	...	...	...	1,275	1,485	1,700	1,940
81	90	...	...	...	1,350	1,570	1,800	2,050
86	95	...	...	...	...	1,660	1,900	2,165
90	100	...	...	...	...	...	2,000	2,280

Before the pressure drops 20 per cent. the tire should be re-inflated.

Inasmuch as cord tires are considerably larger than fabric tires, some motorists have erroneously figured that regular size cord tires should be just as satisfactory as oversize fabric tires. For testing purposes or on dealers' demonstrators regular size cord tires may compare well with oversize fabric tires, so far as speed and gasoline consumption is concerned. But they are not correspondingly easy riding nor as durable, because they are badly overloaded.

Cord tires are built oversize for several definite reasons. One of the most desirable results of this feature is easy riding. Another is the greater strength of the tire. To insure economical use cord tires must be more durable than fabric tires because they are higher in price. Hence the oversize. But they are not recommended to carry heavier loads. Cord tires can be carried at about 10 per cent. lower air pressure than fabric tires, but obviously, overloading counterbalances the easy riding qualities which the lower air pressure is intended to give.

There is a certain fixed average percentage of tire deflection corresponding to general best results that may be applied to all tires alike; an average that gives net satisfaction to the consumer, including initial cost, upkeep expense, cushioning qualities, etc. An average deflection of 12.0 per cent. for a 3-inch tire to 10.9 per cent. for a 6-inch tire has been found to be most satisfactory under average conditions, these figures being based on exhaustive consideration of pneumatic tire service for a number of years. This deflection value at the loads recommended causes all sizes of tires to wear to about the same mileage and allows for initial tire cost at list price with fixed charges (interest, aging and acci-

dental injury) amounting to about 50 per cent. of that. The percentage of deflection is taken as slightly less in the larger size tires on account of their thicker carcass wall being strained more than the thin wall in the smaller sized tires for the same percentage of deflection. The pressure table above is computed on this basis.

S. A. E. Inflation Recommendations

The Tire and Rim Division of the Standards Committee of the Society of Automotive Engineers recommends for S. A. E. Standard the following revised and expanded table of carrying capacities and inflation pressures for fabric and cord passenger tires and for cord commercial vehicle tires.

	Fabric Tires for Passenger Cars		Cord Tires for Passenger Cars		Cord Tires for Commercial Vehicles	
Tire Size	Maximum Load Per Tire	Corresponding Air Pressure	Maximum Load Per Tire	Corresponding Air Pressure	Maximum Load Per Tire	Corresponding Air Pressure
3	375	45	400	40	...	...
3½	570	55	600	50	...	...
4	815	65	850	60	850	70
4½	1,100	75	1,200	70	1,200	75
5	1,500	85	1,700	80	1,700	80
6	...	..	...	..	2,200	90
7	...	..	...	..	3,000	100
8	...	..	...	..	4,000	110
*9	...	..	...	..	5,000	120
*10	...	..	...	..	6,000	130

*The loads and pressures for these sizes are S. A. E. recommended practice only.

The following is a handy table embodying the above issued by the United States Rubber Co. and showing load capacity and inflation pressures for both metric and inch sizes of pneumatic tires in pounds and kilograms.

Millimeter Fabric Tires

Metric Size	Maximum Permissable Load per Tire		Corresponding Inflation Pressures	
Mm.	Kgs.	Lbs.	Kgs.	Lbs.
85-90	170	375	3.25	45
100	260	570	4.00	55
105	370	815	4.75	65
120	500	1100	5.25	75
135	680	1500	6.00	85
150	900	1975	6.75	95

Inch Fabric Tires

3	170	375	3.25	45
3½	260	570	4.00	55
4	370	815	4.75	65
4½	500	1100	5.25	75
5	680	1500	6.00	85

INCH CORD TIRES

3½	270	600	3.50	50
4	380	850	4.25	60
4½	540	1200	5.00	70
5	765	1700	5.50	80
6	990	2200	6.25	90
7	1350	3000	7.00	100
8	1800	4000	7.75	110
9	2250	5000	8.50	120
10	2700	6000	9.00	130

OVERSIZE TIRES

The object of oversize tires is to provide larger air capacity and heavier side walls without changing the size of the rims. After all, we ride on the air in the tires and not on the tires themselves. The air cushion is what carries the load. The claim is that the greater strength and larger air capacity render oversize tires cheaper in price per mile of service despite slightly higher initial cost. Experience has shown that 10 per cent. added to the air capacity of a tire adds 25 per cent. to the tire mileage, and many oversize tires have an air cushion from 30 to 40 per cent. larger than the corresponding regular size. Not only does this take care of any overload, but there are other advantages. They are faster on the average road and give better traction than smaller tires, thus making driving easier and safer on slippery roads. Also they ensure an easier riding and hence a longer lasting car, reducing vibration to the minimum. Easy riding means health and comfort, and the elimination of the vibration prevents consequent gradual crystallizing of the vital steel parts of a car and the possibility of serious breakdowns.

Oversize tires are desirable to take up the extra strain and wear of winter driving. The frozen ruts of ice and of mud on dirt roads, against which the tires bump and scrape, have almost the same effect as travelling over so much crushed stone. Moreover, the winter top and convertible winter body, now so much used on automobiles, increase the weight of the car and consequent load on the tires from 200 to 600 pounds. No thinking motorist would attempt to carry seven to nine men regularly in a five passenger car for three or four months in the year without providing increased load capacity in his tires, and adding an enclosed body is about equivalent to this.

It has been shown time and again that overspeeding is one of the worst enemies of the rubber tire, because of the continued distortion to which the rubber is subjected. The rubber compound does not have time to recover from the shock before it hits the road again, and often the distortion is permanent. Equally as important as the question of speed is the proper size of tire for the load it is called upon to carry.

It stands to reason that for a given weight of car the larger-sized tire will stand the greater amount of wear. But the percentage increase in the life of the tire far exceeds the increase of cost as well as that of the amount of rubber. In short, oversized tires have proved beyond any doubt to be a great economy.

The figures in the following table are taken from five different pleasure cars before and after equipping the wheels with the larger tires. In each case both the front and the rear wheels were of the same size, and not only was the capacity increased nearly 25 per cent. as indicated, but the life of each set of tires was lengthened to more than compensate for the extra cost.

Tire Size Inches	Capacity Pounds	Oversize Inches	Capacity Pounds
30x3	1400	31x3½	1700
32x3½	1800	33x4	2900
34x4	3000	35x4½	3700
36x4½	3800	37x5	4400
36x5	4300	37x5½	5100

Here it is seen that the larger equipment resulted in an increase in the carrying capacity of the car of nearly 25 per cent.

Again, consider the standard car equipments. It is regrettable, but none the less a fact, that some car manufacturers are inclined to place tires of too small size on their cars when they are sent out from the factory. The table below presents data taken from four American-made pleasure cars noted for their poor tire service, the names of the cars in question being designated by letters. The third column gives the capacities with the tire equipment as ordinarily supplied while the last column indicates the capacity which would be realized by the adoption of oversized tires on the same rims.

Car	Tire Size Inches	Car Weight Pounds	Tire Capacity Pounds	Oversize Pounds
A	32x3½	2335	1800	2900
B	36x4	3450	3200	3900
C	36x4½	4100	3800	4400
D	37x5	4675	4400	5200

These figures require no further proof of the advantages gained by the adoption of tires of adequate size.

It should be remembered, however, that an oversized tire does not take care of abuse and overspeeding. With pneumatic tires it is found that a car which averages 20 miles per hour and never exceeds 30, will realize fair service even with undersized tires. In exceptional cases, a set of oversized tires has been known to give a mileage almost double that of the old equipment.

P. W. Litchfield, factory manager of the Goodyear Tire & Rubber Co., states that 33 per cent. of all cars are overloaded and that owners never know true tire freedom until they use 1 to 1 1-2-inch oversize tires. Puncture troubles then disappear like magic, premature tread wear and carcass failure become things of the past and riding similar to that of a Pullman railway car is afforded. Motorists are slowly but surely learning that many manufacturers are undertiring their cars as a means to reduce first cost and that with this defect remedied by the adoption of oversizes fitting the same rims their tires need not be the principal expense of maintenance, but can readily be made a source of real satisfaction. Almost every touring or closed car ought to have oversize tires on the rear wheels, especially seven passenger models.

Different Sizes on Front and Rear Wheels

Considerable discussion has been given to the relative merits of different size tires on front and rear wheels. The size of tires, of course, depends on the weight of a car and its gearing. Many manufacturers have found it to advantage to use a smaller diameter tire on the front wheels than on the rear, and careful investigation seems to prove this to be wise. First, it is much easier to steer, it having a smaller friction area on the ground surface, this makes the wear on the tire as the whole, considerably less, with chances for punctures decreased. It has less weight in itself and is nearer in proportion to the weight of the car, which is, of course, heavier in the rear. For high powered cars, that is, cars required to attain a speed of 40 to 60 miles an hour, the smaller the diameter of the front tire, the less the danger in case of blow out or puncture. S. F. Edge, a noted English driver, has made several tests to determine the relative shock caused by punctures, of different size front tires, with the result that with a 3 or 3 1-2-inch tire, a car going 50 miles an hour would be thrown not over 6 to 8 feet, while with an explosion of a 5-inch tire, it would be thrown from 30 to 40 feet.

Economy and safety call for a smaller diameter front tire. The Ford car has long been constructed and equipped on this principle. Many do not think it economy to carry two sizes of tires, and it is admittedly inconvenient, but in the long run, it will be found more advantageous. For racing purposes a French driver will not use as large a tire on the front wheels as on the rear wheels.

The under tiring of automobiles has been by no means the only reason for the increasing popularity of oversize tires. Many English manufacturers have been skimping their tire sizes, sometimes by as much as 20 per cent. and the practice has resulted in a perceptible pref-

erence in certain quarters, both in the United Kingdom and the Colonies, for American full size casings and even oversizes. Economical Britons were particularly concerned about the effect of this skimping of tire sizes on the registry of taximeters. As the taximeters are calibrated for full size tires the use of undersize casings has frequently resulted in an over-registration of 7 1-2 to 10 per cent. Taxicab fares are high enough without paying 10 per cent. more than the regular rates because the tires used are smaller than listed, but there have been strenuous objections in consequence.

It has often been suggested that variation in inflation pressure, and differences in the type of tire used on the front wheels of a car might be expected to have more or less influence upon speed and mileage indicator readings. That such is the case, a moment's reflection must show, because such instruments are built to record the number of revolutions of the wheel, instead of the distance actually covered by the machine, while the dial is graduated to read in miles per hour, on the assumption that the tire has a certain definite outside diameter. An exact measure of possible inaccuracies in speed indicator reading due to such causes, may be obtained by comparing probable differences in outside diameter, which may occur. From which it is readily seen that only by the substitution for the standard tire of one an entire size larger or smaller, can any material difference be brought about.

Thus it is evident that an increase of one unit in a tire of 100 units diameter must involve a decrease of 1 per cent. in the number of turns made by the wheel in covering a given distance. This, in turn, must involve a decrease of 1 per cent. in the number of turns made by the wheel in covering a given distance. This, in turn, must involve a corresponding reduction in the record of the instrument and so introduce a negative error of 1 per cent. in the reading. So a variation one way or the other of 1 inch in the effective diameter of a 34-inch tire, would mean that the speed indicator readings would vary not more than 3 per cent. either way. Oversize tires average one inch in wheel diameter and three inches in wheel circumference larger than those intended for the rim. This means that the speedometer will record that much less mileage and speed than when the regular size tires are used. A 31-inch tire will thus drop one mile in every thirty, or, in other words, will record only twenty-nine miles in traveling thirty miles.

Tires And Their Oversizes

Each tire now has its oversize. To a car originally provided with tires of the normal size may be added the oversize without change in

wheel or rim equipment. For convenience a table is appended listing the oversize tires which will fit standard rims.

TIRES AND THEIR OVERSIZES

Inches		Inches
31 x 3½	fits	30 x 3 rim
31 x 4	fits	30 x 3½ rim
33 x 4	fits	32 x 3½ rim
35 x 4	fits	34 x 3½ rim
33 x 4½	fits	32 x 4 rim
35 x 4½	fits	34 x 4 rim
37 x 4½	fits	36 x 4 rim
35 x 5	fits	34 x 4½ rim
37 x 5	fits	36 x 4½ rim
37 x 5½	fits	36 x 5 rim
39 x 5	fits	38 x 4½ rim
39 x 6	fits	38 x 5½ rim

Where pneumatics are used on trucks, the fact that most rims will take a larger tire is of the greatest value to the user. The B. F. Goodrich Co. publishes the following table which is very explanatory:

Size Tire Inches	Size Rims They Fit Inches	Style Made in
29x3½	28x3	Regular Clincher and Q. D.
31x3½	30x3	Regular Clincher, Q. D. and Straight Bead
33x3½	32x3	Regular Clincher and Straight Bead
35x3½	34x3	Regular Clincher and Q. D.
31x4	30x3½	Regular Clincher, Q. D. and Straight Bead
33x4	32x3½	Regular Clincher, Q. D. and Straight Bead
35x4	34x3½	Regular Clincher, Q. D. and Straight Bead
37x4	36x3½	Regular Clincher, Q. D. and Straight Bead
33x4½	32x4	Regular Clincher, Q. D. and Straight Bead
35x4½	34x4	Regular Clincher, Q. D. and Straight Bead
37x4½	36x4	Regular Clincher, Q. D. and Straight Bead
41x4½	40x4	Regular Clincher only
43x4½	42x4	Q. D. only
35x5	34x4½	Regular Clincher, Q. D. and Straight Bead
37x5	36x4½	Regular Clincher, Q. D. and Straight Bead
39x5	38x4½	Q. D. only
41x5	40x4½	Q. D. only
43x5	42x4½	Regular Clincher and Q. D.
37x5½	36x5	Q. D. and Straight Bead
37x6	36x5½	Q. D. only
39x6	38x5½	Q. D. only
41x6	40x5½	Q. D. only

TIRE STANDARDIZATION

In the early days of the automobile as a practical vehicle fully 50 per cent. of the cars is use weighed less than 1,500 pounds, and as a rule used very light tires on 28-inch or even smaller wheels. By 1908, however, 50 per cent. of the cars in use averaged to range between 2,200

and 3,500 pounds. Wheel diameters were from 32 inches upward and tire diameters from 4 to 5 1-2 inches. Even on the lighter cars there was a growing tendency to increase the weight of the tire. Motorists began to realize more and more clearly that there is no economy in cheap tires and the custom grew to have a car "over tired" rather than to run the risk of annoying breakdowns and dangerous accidents.

Owners of cars weighing 2,200 to 3,000 pounds, who formerly thought 3 1-2 inch tires ample, began to equip with 4, 4 1-2 and 5-inch diameters. Non-skid treads, which add to the thickness and weight of the tire and undoubtedly help to ensure safety and durability, began to be generally used on the rear driving wheels, their popularity having grown as motorists became more experienced and all tire manufacturers began producing them.

Elimination of Unnecessary Sizes

As early as 1910 writers on automobile topics began to point to the unnecessary number of "odd sized" tires being manufactured. The original idea was to sell such tires to owners of cars whose tires were not large enough in cross section to give satisfactory service. Some of these met with such enthusiastic reception that other odd sizes were added until the variety became almost endless and a nuisance to tire branch houses and repair depots because of the large investment involved, the impossibility of keeping an adequate stock of all sizes and kinds and the ultimate decrease in profits. While motor car manufacturers were chiefly responsible at the outset because of the unnecessarily varied wheel diameters adopted by them, tire makers made matters much worse, for there had been ample knowledge of what loads and speeds tires are serviceable under, and if any manufacturer had allowed his tires to be overloaded he had been guilty of a very shortsighted policy, inasmuch as there had been ample business to select from.

S. A. E. Tire Standards

In 1915 the Society of Automobile Engineers recommended a schedule of nine rim and eighteen tire sizes to replace the more than fifty tire sizes then in use, and this was endorsed by the Clincher Tire Manufacturers' Association. The tire sizes were classified in two lists, one for both manufacturers and consumers, and consisting of even sizes corresponding to the nine rim sizes, the other for consumers only and consisting of nine odd or oversizes intended only for use by consumers desirous to increase the tire capacity of their cars beyond that intended by the builder.

The schedule recommended by the S. A. E. follows:

Rim sizes Inches	Even tire sizes for manufacturers and consumers Inches	Odd or oversize for consumers only Inches
30x3	30x3	31x3½
30x3½	30x3½	31x4
32x3½	32x3½	33x4
32x4	32x4	33x4½
34x4	34x4	35x4½
34x4½	34x4½	35x5
36x4½	36x4½	37x5
36x5	36x5	37x5½
38x5½	38x5½	39x6

In 1916 the S. A. E. recommended straight side tires of the wide standard from 32 by 3 1-2 to 36 by 4 1-2 only, as larger straight sides had not been found practical. Since then, however, improvements in both tire construction and rim design have rendered this type of pneumatics highly desirable in even the largest sizes. In March, 1918, it was determined that all pneumatic tires, except the 30 by 3, 30 by 3 1-2 and their oversizes, 31 by 3 1-2 and 31 by 4, should be of the straight-side type.

During the summer of 1918 at the request of the Economy Board of the Council of National Defense a program of pneumatic tire size elimination was recommended by the War Service Committee of the Rubber Industry and approved by the Tire and Rim Association, the National Automobile Chamber of Commerce and the Society of Automotive Engineers, which would have resulted after November, 1920, in the standardization of pneumatic tires and rims to seven sizes of rims and nine sizes of tires, adequate to equip with pneumatic tires any motor vehicle up to a two-ton truck. It was suggested that motor car manufacturers use as original equipment the nominal tire and rim sizes, thus permitting the optional use of the indicated oversize equipment by consumers. This eliminated all 26 to 27-inch wheel diameters. All tire sizes were to be manufactured with both plain and non-skid treads.

The simplified schedule follows:

Normal Tire and Rim Sizes		Oversize Tires		Tire Seat Dia. (Rim)		Type of Rim
Inches	Mm.	Inches	Mm.	Inches	Mm.	
30x3½	90/585	31x4	105/585	23	585	clincher
32x3½	90/635	33x4	105/635	25	635	straight side
33x4	105/635	34x4½	120/635	25	635	straight side
34x4½	120/635	35x5	135/635	25	635	straight side
36x6	150/610	38x7	175/610	24	610	straight side
38x7	175/610	40x8	200/610	24	610	straight side
40x8	200/610	....	.....	24	610	straight side

Note.—In inch nomenclature, nominal tire diameter=tire seat diameter twice tire cross-section diameter. Sizes are designated by giving outside diameter of tire and tire-section diameter as (30 by 3 1-2.)

In metric nomenclature, the nominal diameter=tire-seat diameter. Sizes are designated by giving tire cross-section diameter and tire-seat diameter. When spoken, the size is referred to as "90 for 585," but is branded as 90/585.

The feasibility of reducing the fifty odd sizes of tires to nine will be understood when it is realized that 85 per cent. of the tires on the cars then in use were among the sizes mentioned. Tire makers of course were to manufacture oversizes for these tires, while the makers of cars were to adopt standard sizes, allowing the user to fit the oversize should he deem it necessary.

This standardization very materially affected the equipment of 1919 automobiles and is likely to have a beneficial effect for several years to come. With the sudden ending of the war, however, the program of eliminating particular sizes on fixed dates was abandoned, and the policy of tire manufacturers will now be to make tires in the sizes needed, the sizes of the rims and tires in actual use or to be built to govern tire production.

Tires and Rims for Passenger and Commercial Vehicles

The Tire and Rim Division of the Standard Committee of the Society of Automotive Engineers on June 23, 1919, recommended the following revised list of pneumatic tire and rim sizes for passenger and commercial vehicles:

Normal Tire and Rim Sizes		Oversize Tires		Tire Seat Dia. (Rim)		Type of Rim
Inches	Mm.	Inches	Mm.	Inches	Mm.	
30x3½	90/585	31x4	105/585	23	585	clincher
32x3½	90/635	33x4	105/635	25	635	straight side
32x4	105/610	33x4½	120/610	24	610	straight side
33x4	105/635	34x4½	120/635	25	635	straight side
32x4½	120/585	33x5	135/585	23	585	straight side
34x4½	120/635	35x5	135/635	25	635	straight side
36x6	150/610	38x7	175/610	24	610	straight side
38x7	175/610	40x8	200/610	24	610	straight side
40x8	200/610	....	.....	24	610	straight side

Note:—These tire and rim sizes conform to the joint recommendation of the National Automobile Chamber of Commerce (Bulletin No. 267, February 18, 1919) and The Rubber Association of America, which contemplates that they will be the only sizes used by automobile manufacturers after January 1, 1920. It will be noted that the old 32 x 4 and a new 32 x 4½ inch size were added.

In March, 1920, the 33 by 4 1-2 inch oversize was included in the list of regular sizes, as well as continued in the list of oversizes. A new regular size, 34 by 5 inch, was added, this also serving as an oversize for the 33 by 4 1-2-inch size. In addition, the 42 by 9 inch size

was included in the regular list, and as an oversize for the 40 by 8-inch size. In August, 1920, however, the 42 by 9 inch size was replaced by the 44 by 10-inch size as a regular size.

As recommended by the Tire & Rim Division, amended and accepted by the Standards Committee and approved by the Council of the Society of Automotive Engineers, the present S. A. E. standards for pneumatic tires and rims for passenger cars and commercial vehicles are as follows:

Normal Tire and Rim Sizes		Oversize Tires		Tire Seat Dia. (Rim)		Type of Rim
Inches	Mm.	Inches	Mm.	Inches	Mm.	
30x3½	90/585	31x4	105/585	23	585	clincher
32x3½	90/635	33x4	105/635	25	635	straight side
32x4	105/610	33x4½	120/610	24	610	straight side
33x4	105/635	34x4½	120/635	25	635	straight side
33x4½	120/610	34x5	135/610	24	610	straight side
32x4½	120/585	33x5	135/585	23	585	straight side
34x4½	120/635	35x5	135/635	25	635	straight side
34x5	135/610	36x6	150/610	24	610	straight side
36x6	150/610	38x7	175/610	24	610	straight side
38x7	175/610	40x8	200/610	24	610	straight side
40x8	200/610	42x9	225/610	24	610	straight side
44x10	250/610	....	.....	24	610	straight side

This makes a total of sixteen standard pneumatic tire sizes, of which about ten are extensively used for new equipment on passenger cars. There are twelve standard rim sizes.

Current Considerations

Among the further standardization matters being considered jointly by the Society of Automotive Engineers, the National Automobile Chamber of Commerce, the Rubber Association of America, the Tire and Rim Association, the Motor Transport Corps and the Bureau of Standards are reduction of the number of standard pneumatic tire sizes to the lowest possible minimum; the adoption of the 24-inch wheel for all tire sizes; limits for oversize tires; metric tire sizes for export; interchangeability of front and rear pneumatic truck tires.

Adoption of the 24-inch wheel for all pneumatic tires sizes is strongly advocated by the Goodyear Tire & Rubber Co. because it is desirable to oversize right through the line of tires; because such a practice would reduce the cost and improve the quality of tires, rims, wheels, axles, speedometers and other car parts; improve greatly distributing and stocking conditions and result in tremendous economic saving to the whole industry and a saving in service to the consumer.

The concensus of opinion, however, seems to be that the 24-inch wheel is not the only desirable one to use, as its general adoption would

handicap engineering effort and impede the development of cars of greater economy from the standpoint of maintenance. The wisdom is questioned of considering pneumatic tires jointly for passenger cars and trucks because truck tire practice may change considerably. Practically all of the pneumatic tires used on trucks are mounted on 24-inch wheels and truck builders favor conditions that permit oversizing of tires without difficulty.

The Rubber Association of America has recommended that the actual cross-sectional width of pneumatic cord tires when inflated in accordance with the S. A. E. standard be not less than the nominal width marked thereon nor greater than 10 per cent. in excess of such nominal width; it being understood that the nominal width of the so-called 5-inch tire shall, in accordance with custom, be considered 5 1-4 inch.

Prescribed limits for the actual outside diameters of the respective nominally dimensioned tires are considered very important as affecting gear ratios, speedometers, body and fender clearances, vehicle turning radius, brackets for spare tires and the use of non-skid devices.

Interchangeability of pneumatic truck-tires and rims between front and rear wheels has become highly desirable to obviate the necessity of carrying more than one large and expensive spare tire and rim for tire change on the road. An attempt is being made to work out a rim and felloe construction that will permit interchanging 36 by 6, 38 by 7 and 40 by 8-inch tires and rims without the use of adapter rings or other spare parts.

SOLID AND PNEUMATIC TIRE EQUIPMENT FOR COMMERCIAL VEHICLES

As it is desirable for all tire manufacturers to make identical tire equipment recommendations, the Division presents a table which will more or less summarize the result of past activities and represent good practice.

In this table in the columns headed "Maximum Weight per Wheel" the figures given are the result of very careful investigation as to actual weights of trucks in use at the present time. It was found that trucks of light weight capacity did not deviate much on the average weight figures, so that it is felt that while the tire equipment stated for each weight truck will not be 100 per cent. correct, it will cover more than 95 per cent. of the cases.

This report has been referred back to the Tire and Rim Division. These data are admitted, however, as general information only, as representing good present-day practice.

COMMERCIAL VEHICLE TIRE EQUIPMENT

Size Truck Tons	Front: Maximum Wt. per Wheel Pounds	Front: Pneu. Tire Size* Inches	Front: Solid Tire Size Inches	Rear: Maximum Wt. per Wheel Pounds	Rear: Pneu. Tire Size* Inches	Rear: Solid Tire Size Inches
¾	800	33x4 or 35x5	none	1600	35x5	none
1	1000	34x4½	34x3½ or 36x3½	2100	36x6	34x5 or 36x5
1½	1200	34x4½	34x3¾ or 36x3½	3000	38x7	36x6
2	1500	35x5	34x4 or 36x4	3500	40x8	36x7
2½	1800	36x6	36x5	4000	40x8	36x7
3	2000	36x6	36x5	5200	44x10	36x5 d 36x10
3½	2100	36x6	36x5	5700	44x10	40x5 d 40x10
4	2300	38x7	36x6	6500	48x12	40x6 d 40x12
5	2700	38x7	36x6	7800	48x12	40x5 d 40x12

*All pneumatic tires to be of cord construction.

Notwithstanding these attempts toward tire standardization an analysis of the size of the tires used on the cars described in the "Handbook of Automobiles" shows how far we still are from standard sizes, though the majority of the passenger cars use tires that differ less than an inch from each other.

On all the pleasure cars the front and rear wheels are of the same size and out of 151 pleasure vehicles 35 have wheels with tires 32 by 4, 20 measure 32 by 4 1-2, and 27 measure 33 by 4. The other measurements given are 35 by 5, 11 cars; 34 by 5 1-2, one car; 34 by 4 1-2, 24 cars; 34 by 4, one car; 33 by 5, 12 cars; 33 by 4 1-2, 5 cars; 32 by 3 1-2 4 cars; 31 by 4, 5 cars; 30 by 3 1-2, 6 cars.

The variety in the tires of commercial trucks is far greater; out of 77 trucks, 25 have front and rear tires of the same size, and of these 7 take tires 36 by 5, with front wheels single solid and rear wheels dual solid, while two have single solid tires 36 by 5, both front and rear. Six trucks take size 36 by 4, front single solid, rear dual solid; six have pneumatic tires, one 36 by 6, two 35 by 5, two 34 by 4 1-2, and one 31 by 4. The other sizes of solid tires for cars with like front and rear wheels are 40 by 6, 36 by 7, 36 by 6 and 33 by 4, one of each.

With a few exceptions, in the case of dissimilar wheels, there are as many varieties of tire combinations as there are cars. Ten cars out of 52 take 36 by 4 single solid tires for front wheels and 36 by 7 single

solid tires for the rear wheels; 5 cars, 36 by 6 single solid front and 40 by 6 dual solid rear; 4 cars, 36 by 5 single solid front and 40 by 5 dual solid rear. The other 33 cars use twenty-six different sizes or combinations of sizes, ranging from 38 by 7 pneumatic and 38 by 4 solid to 32 by 2 1-2 solid for front wheel tires and 42 by 12 solid and 42 by 9 pneumatic to 32 by 3 solid for rear wheel tires.

One reason for the lack of uniformity in tire measurements is the great diversity in size and carrying capacity of the trucks, one being rated at 7 1-2 tons, 12 at 15 tons, 18 at 3 1-2, 11 at 2 1-2, 10 at 2, with cars of every intermediate and smaller capacity down to 1,000 pounds and 750 pounds.

Tire Standardization in Europe

The European war brought home to all the nations engaged in it the importance of standardization of tire sizes and the limitation of these to the smallest number possible. Germany, for instance, discovered that seven different dimensions of automobile tires meet all requirements. Before the war at least thirty different sizes were used in the German Empire, and the authorities report that fully 40 per cent. of the tires in stock in the country on August 1, 1915 were found to be in odd sizes suited to only a small number of machines. In France it is evident also that serious efforts will be made toward standardization.

In 1916, taking account of the great number of odd sizes still in use, at least 50 different sizes of pneumatic automobile tires were on the European market. The following table gives the European sizes most widely used, together with equivalents in inch measurements.

French or Metric Tire Sizes

Sizes in Millimeters		Equivalents in Inches	
Interior Diameter.	Section Diameter.	Interior Diameter.	Section Diameter.
710	90	27.95	3.54
760	90	29.92	3.54
810	90	31.89	3.54
870	90	34.25	3.54
910	90	35.83	3.54
765	105	30.12	4.13
815	105	32.09	4.13
875	105	34.45	4.13
915	105	36.02	4.13
820	120	32.28	4.72
880	120	34.65	4.72
920	120	36.22	4.72
895	135	35.24	5.32
935	135	36.81	5.32

British Standards

The Tire Committee of the British Society of Motor Manufacturers & Traders in 1915 proposed to reduce its pneumatic tire rim standards to a total of 10, and its tire standards to the 11 different sizes here given. The proposed tire sizes are:

Millimeters	Equivalents in Inches
700x80	27.5x3.14
700x85	27.5x3.34
710x90	27.9x3.54
760x90	29.9x3.54
810x90	31.9x3.54
815x105	32.1x4.13
820x120	32.3x4.72
880x120	34.6x4.72
895x135	36.8x5.31
835x135	36.8x5.31
915x175	36.0x6.88

These are practically the standards long recognized all over continental Europe and at present effective throughout the Old World. The assumption is that these figures represent the exact measurement of the tires and not, as is at present the case in Europe, fictitious measurements which sometimes vary considerably from one make of tire to another.

The proposed British standards, given above, do not include sizes that are specially made for rough service in the Colonies and known as Colonial sizes. The following are most in demand:

Colonial Tire Sizes

Millimeters	Equivalents in Inches
1,010x90	39.76x3.54
1,020x120	40.16x4.72
1,080x120	42.52x4.72
1,000x150	39.37x5.91
1,050x150	41.34x5.91

Some British tire manufacturers consider a 915 by 105 millimeter (36.02 by 4.13 inches) tire as a Colonial size.

In 1920 a list of British tire standards was issued by the British Engineering Standards Association at the instance of the British Rubber Tyre Manufacturers' Association. In consultation with the American Society of Automotive Engineers the S. A. E. standard sizes have been added, marking a further step in Anglo-American cooperation. The following schedules have been issued as an interim measure pending a complete revision of the British standard reports affected.

Part 1. Pneumatic Tire and Rims

SCHEDULE A

British Standard List of Cycle Tires for British Standard Rims

WIRED TYPE

Nominal Size and Marking of Tire		Rim required
Inches	Millimeters	
22x1⅜	550x32	F. 2
24x1⅜	600x32	F. 3
26x1½	650x38	F. 9
28x1½	700x38	F. 10
26x1¾	650x44	F. 12
28x1¾	700x44	F. 13

BEADED EDGE TYPE

Nominal Size and Marking of Tire		Rim required
Inches	Millimeters	
26x1½	650x38	B. 4
28x1½	700x38	B. 5
28x1¾	700x44	B. 8

SCHEDULE B

British Standard List of Motor Cycle Tires for British Standard Rims.

BEADED EDGE TYPE ONLY

Nominal Size and Marking of Tire		Rim required
Inches	Millimeters	
24x2¼	600x55	D. 1
26x2¼	650x55	B. B.
26x2½	650x55	B. B.
26x3	650x75	C. C. 1
28x3	700x75	C. C. 2

SCHEDULE C

British Standard List of Light Car Tires for British Standard Rims.

BEADED EDGE TYPE ONLY

Nominal Size and Marking of Tire		Rim required
Inches	Millimeters	
26x3	650x75	C. C. 1
27x3½	685x90	C. C. 1
28x3½	700x90	28 L. C.
29x4	735x100	28 L. C.

The above range includes all sizes regarded as necessary for the equipment of all types of cycles—juveniles, standard roadsters, and carriers—excepting only racing machines. It is not proposed to standardize either tires or rims of special racing types.

In view of the unsatisfactory range of light car tire and rim sizes hitherto available, this new range of two rims with two sections of tire for each rim is adopted.

(The present 650x65 and 700x80 tires will go on to the C. C. 1 rim.)

SCHEDULE D

British Standard List of Motor Tires for British Standard Rims.

BEADED EDGE TYPE

Nominal Size and Marking of Tire	Rim required
Inches	
30x3½	30 B. E.
31x4	30 B. E.
Millimeters	
815x105	815 B. E.
815x120	815 B. E.
820x120	820 B. E.
820x135	820 B. E.
880x120	880 B. E.
880x135	880 B. E.
895x135	895 B. E.
895x150	895 B. E.

SCHEDULE E

British Standard List of Motor Tires for British Standard Rims.

WIRED TYPE FOR STRAIGHT-SIDED RIMS

Nominal Size and Marking of Tire		Rim Required
Inches	Millimeters	
32x3½	815x90	S. S. 32x3½
33x4	840x105	S. S. 32x3½ or S. S. 33x4
32x4	815x105	S. S. 32x4
33x4½	840x120	S. S. 32x4
32x4½	815x120	S. S. 32x4½
33x5	840x135	S. S. 32x4½
34x4½	865x120	S. S. 34x4½
35x5	890x135	S. S. 34x4½

SCHEDULE E—Continued

British Standard List of Commercial Vehicle Tyres for British Standard Rims

36x6	915x150	S. S. 36x6
38x7	965x175	S. S. 38x7
40x8	1015x200	S. S. 40x8

British Commercial Vehicle Tires

An analysis of the tire equipment of upwards of one hundred types of British commercial vehicles ranging from 1-2 to 6 tons normal capacity, or to 10 tons when used with a trailer, shows that out of six 1 1-2 ton trucks considered, three preferred front tires measuring 860 to 90 mm. single (or 90 to 720 mm. rim), while three also agreed upon rear tires 860 by 90 mm. twin. In 2-ton trucks six out of twelve analyzed called for front tires 870 by 100 mm. or 100 for 720 rims single, and rear tires twin of same dimensions. The same dimensions of tires were also popular with four out of seven 2 1-2 ton trucks analyzed. Three-ton trucks showed more diversity in tire sizes, five out of seventeen using front tires 900 by 120 mm. or 120 for 720 mm. rims, while only two used the same rear tire size, 103 by 140 for 851 twin. Three 3 1-2-ton commercial vehicles used front and rear tires the same size, 930 by 120 mm. or 120 for 771-mm. rims, the remainder of the eleven analyzed calling for many different tires sizes. Among the 4-ton trucks, tire sizes varied still more, three preferring front tires 900 by 130 mm. or 130 for 720 rims, and two each front tires 900 by 120 or 120 for 770 rims, and 880 by 120 or 120 for 720-mm. rims. Rear tires, 1.010 by 120 mm. or 120 for 850 were chosen by two 4-ton trucks, while two others agreed upon 1,050 by 120 or 120 for 881.

The others among the nineteen 4-ton trucks analyzed showed wide variations. Among eighteen types of 5-ton trucks there was more uniformity. Three each used front tires 900 by 160 or 160 for 720-mm. rims, and 880 by 120 or 120 for 720-mm. rims. For rear tires five used 1,050 by 160 twin or 160 for 850, and four used 1030 by 140 twin or 140 for 850. Out of five 6-ton vehicles two used front tires 970 by 160 or 160 for 771 and rear tires 1,050 by 160 or 160 for 850-mm. rims.

European Tire Dimension Anomalies

Those who have had occasion to measure European pneumatic automobile tires, for fitting speedometers, or for other purposes, have noted that the metric measurements indicated on these tires very seldom correspond with their actual dimensions. For instance, a tire marked 760 by 90 millimeters (29.92 by 3.54 inches) does not actually measure 760 millimeters in diameter; nor does an 880 by 120 millimeters (34.65 by 4.72 inches) tire actually measure 880 millimeters.

In the early days of the automobile tire industry, when Michelin, the pioneer, began to make "large tires"—large when compared with the 65 millimeter (2.56 inches) section tire which was the first type of automobile tire produced—he made them according to his own judg-

ment, and in sizes demanded by automobile manufacturers, without any idea of the dimensions corresponding with even numbers of centimeters. He made inner tubes of 105, 120, 135 millimeters (4.13, 4.72, 5.32 inches), all of which could be fitted to rims of approximately the same size, and he adopted the method, still in vogue today in Europe, of designating automobile tire sizes by two numbers, the first referring to the diameter of the wheel with the inflated tire upon it, and the second relating to the sectional diameter of the tire.

It was soon found that chauffeurs experienced difficulty with the fractions of centimeters in ordering tires and, to make it an easy matter for them to remember tire sizes, Michelin decided to have the two numbers designating the tire terminate with the same figure or figures having a similar consonance when named in the French language. For instance, 810 by 90, stated in French is *huit cent dix, quatre-vingt-dix.* This was the origin of the automobile tire size designations that today are still current in Europe, and of which the principal ones are as follows:

Millimeters	Equivalent in Inches
810x90	31.89x3.54
815x105	32. 9x4.13
820x120	32.28x4.72
870x 90	34.25x3.54
875x105	34.45x4.13
880x120	34.65x4.72
895x135	35.24x5.32
910x 90	35.83x3.54
915x105	36.02x4.13
920x120	36.2 x4.72
935x135	36.81x5.32

Michelin adopted these designations arbitrarily, without making any changes in the actual sizes of the tires, the numbers marked upon them being changed to suit euphony and to make them easy to remember. Hence the anomalies and confusion.

In a number of these confused designations, however, the figures referring to the sectional diameter of the tires represent approximately the correct measurements of the casings, not when they are new, but after they have covered several hundred miles. New tire casings swell during the first few hundred miles of their wear and an 820 by 120 millimeters (32.28 by 4.72 inches) casing, that measures when new a little more than 110 millimeters (4.33 inches) in sectional diameter, will measure its full 120 millimeters (4.72 inches) after running from 200 to 300 miles. As far as the exterior diameter of the tire is concerned, the designating numbers marked on European millimeter tires are never more than approximate.

CHAPTER XXIX

BICYCLE TIRES IN GENERAL

History of the Bicycle Tire

THE history of bicycle tires has not been studied as carefully as it deserves, because the majority is not so much interested in historical development as in actual results. Inventors and a few who are students by nature may be interested, but they generally prefer to read their history at first hand, which is in the patent office reports.

The velocipede seems to have been mainly an English invention, developed during the time that the French were busy conquering continental Europe. By the time that the British were becoming tired of velocipeding, the French had become tired of conquering, and gladly took up the less dangerous hobby horse. While the British were developing the locomotive, the French continued with their velocipedes, which they improved considerably. During the sixties they even established agencies for their hobbies in the other European states, particularly England. The head of their London agency was Thomas Sparrow, an Englishman.

Sparrow's Place in the Trade

Sparrow's sales were not very abundant, so that he had plenty of time to think. He bethought him of the possibility of putting rubber tires on these wheels, and about 1870 he introduced the rubber tired bicycle to the British market. The English were very busy building railroads, ships and empires, so that not much attention was given to Sparrow. By 1873, however, he had got a following, and he financed a great 1,000-mile run from Land's End to John o'Groat's. Four riders made the trip, the record being 14 days. Sparrow also rode a wheel most of the way with them, taking careful note of the behavior of the different machines, in order to discover and remedy their weak points. Noticing that the rubber tires skidded on greasy roads, he made experiments resulting in the use of leather treads for non-skids. He also instituted corrugated treads in rubber tires. He built a bicycle factory in London, at 82 Brompton Road, S. W., where he did a good business, also inventing a ladies' wheel in 1875. In 1876 the Stanley Cycling Club held its first great show in London, which popularized and greatly improved the new toy. These changes did not

affect the tires, however, which continued to be of the same general design, though leather treads grew rapidly in favor. Most efforts toward improvement were expended in making the tires stay on—the problem that is ever with us. Cements were generally relied upon, though the sectional solid, held on by rim screws, found some favor.

In 1881 the "Indestructible" tire came out, representing a distinct improvement in tire making. This tire was vulcanized to the channel, the rubber adhering to the metal so closely that it was impossible to tear out the tire. Its disadvantage was that repairs necessitated sending the wheel to the factory. The sectional solid, mentioned above, was held on by a steel strip running through the tire, this strip being engaged by screws through the rim.

British Pneumatics

The application of pneumatic tires, successfully accomplished in the early part of 1880, was of course, the turning point in bicycle history. The year 1890 saw the introduction of the detachable, wired-on tire, and inventions came so thick and fast that by the end of 1890 British pneumatics had taken on the essential characteristics of the bicycle tire of today. To be sure, the thing was still primitive enough, having only one layer of fabric, generally made of linen. Moreover, the cycling papers had foreseen future developments in tire making, most of which have, indeed, come to pass, and the various ills peculiar to balloon tires had been well diagnosed. The necessity for thorough inflation was being dwelt upon, a pressure of 40 pounds being recommended. Two types of self-inflating tires had been patented during 1890, valve improvements and various puncture schemes were in order, safety valves had been suggested, and attempts were being made to prevent the rubber tread from peeling off the canvas.

Single Tube Cycle Tire

The early development of the pneumatic was practically confined to Ireland, though the Welch and other noted inventions were English or Scottish in origin. The Irish racing teams, with their pneumatics, went over to England and won all the races so easily that the English were actually shamed into cultivating the same type of tire. The cushion tire, first brought out by Macintosh in 1884, had been very popular in England, but this disappeared, and the pneumatic held the field. Boothroyd, in Ireland, brought out a cushion tire that was practically a single tube pneumatic, and at the same time Tillinghast, in the United States, brought out the single tube, or undetachable tube tire, which afterwards became so famous.

America Late in the Field

If England and Scotland were slow to take up the Irish invention, the United States were still slower. In 1891 the racing board of the League of American Wheelmen was still fighting the pneumatic, and racers who used "balloon" tires had to stand a heavy handicap. It was the deeds of Nancy Hanks in a "bike" sulky that really taught Americans the virtues of the pneumatic tire. The business increased very rapidly when it did begin, and in 1891 the American consumption of rubber for bicycle tires was estimated at 1,000,000 pounds, including all types. The weight of bicycle tires then averaged about 4 pounds, whereas racing tires later came to weigh as many ounces. In 1892 the estimate for American tires was 2,000,000 pounds of rubber, the tires averaging about 5 pounds apiece. The American tire business was still small, however, as compared with that in Great Britain, where there were nearly 1,200 bicycle factories running, and some of the tire factories were using some 15,000 pounds of rubber a week.

During 1892 the American market offered the following types of bicycle tires: Solid, cushion, inflated (single tube), Bothroyd cushion, and the regular pneumatic (double tube). There was, as yet, no national division in types, such as later developed, and the New York Belting & Packing Company, the first to make bicycle tires in the United States, made and offered all known types, including detachable pneumatics. The Sweeting Cycle Company, in their 1892 catalog, said of the tire trade of 1891: "The year has not been without surprises. Foremost among them comes the pneumatic tire. At the beginning of the year it looked as if the whole business would be in single hands; but the utter worthlessness of the first tires put on the market brought American brains into play, and now the manufacturer who does not have his own pneumatic tire is in the minority."

This tendency for bicycle builders to make their own tires increased rapidly for several years, until each leading make of wheel was thought of as having a certain kind of tire. Thus the G. & J. tire was identified with "Rambler" bicycles; "Victor" wheels were equipped with a special make of tire, and so on. Each bicycle had its own enthusiastic admirers in those days, and they were prejudiced against any tire put out by another firm. Morgan & Wright was about the only independent concern making tires exclusively, and exerted a tremendous influence on tire construction in the United States, in-

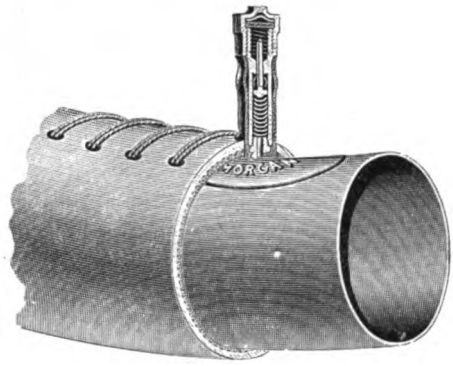

DOUBLE TUBE CYCLE TIRE

venting the buttended and quick-repair types, and keeping popular attention fixed upon the subject of tires. This firm came in time to make some 70 per cent. of all the bicycle tires used in America.

THE SINGLE-TUBE TIRE IN AMERICA

Nevertheless, it was not the Morgan & Wright tire, built by tire specialists, but the Hartford tire, built by a bicycle manufacturing company, that ultimately triumphed in America. The reason for this lies partly in the love of Americans for fast riding and partly in their mechanical aptitude and ability to handle tools. While the Europeans were riding 2-inch double tubes, held on by wires in France, and by beaded edges in Germany, and by both methods in England, the tendency in the United States was wholly toward single tubes of even smaller diameters, it having been found that a small single tube, pumped hard, is the fastest of all for road use. The Tillinghast Tire Association, which controlled the manufacture of all single tubes, finally produced an article which represented the high-water mark in bicycle tire making, in resilience, cheapness, beauty and speed. For

anybody with deft fingers, it was also the easiest of all to repair, and this fact appealed strongly to the American.

Though American single tubes invaded Europe and found hosts of friends, on account of their many virtues, the question of their repair could never be mastered by either the British or the Continentals. Could the Tillinghast Association have set up repair shops at convenient places throughout Europe, single tubes might have swept the world as they did America. Even despite hostile tariffs, they were sold in Europe cheaper than the home made kind. There were only 200 single-tube tires made in United States in 1891, while 1,250,000 were sold in 1896. In England the single tube was cultivated during the early years, the Avon Rubber Company being most successful; then, too, the W. &. A. Bates Company was using plugs for its tires

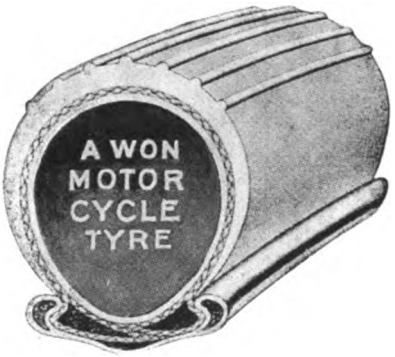

BARTLETT CLINCHER CYCLE TIRE—ENGLISH

in 1892; so that the repair of single tubes by the regulation method has been known in England as long as in America. The British are tolerably quick with tools, and the reason that the double-tube tire survived in the United Kingdom is probably to be found in the prevalence of hedge thorns on the English roads. These hedge thorn pricks are easily stopped with the thick repair fluids which were later developed here in America; and had the English known of this method early in the day, the single tube might have had a different history there. There are no hedges in France, and the avowed reason of the failure of the single tube there was the inability of the French to repair it. Another reason was probably due to the great influence of the Dunlop company there, no less than to the great growth of the Michelins. Even to this day, the wired-on tire is the dominant type in France.

The Germans seem to have had as much trouble as the French with single-tube repairs. They lagged slightly behind the French in taking to the wheel, and when the Continental and Berlin-Frankfurter companies undertook the manufacture of bicycle tires, they were wholly under British influence. The Continental company made racing tires of the single-tube type, but these were very expensive and unsuitable for road use.

On the other hand the French racing tires were a cross between single and double tube. They had the appearance of single tubes, but they were so made that the outer casing could be unwrapped, exposing the tube. Where the casing layers overlapped, they were loosely

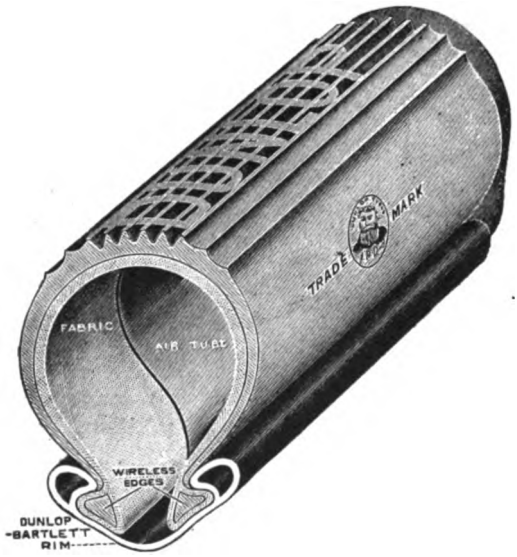

DUNLOP CLINCHER CYCLE TIRE—ENGLISH

cemented, so that the lap could be pulled open. One reason why the Dunlop has always been the standard bicycle tire in France is that the Darracq and Clement companies, now so famous as automobile makers, generally controlled, or rather monopolized, the French bicycle industry, and these manufacturers very early agreed to use only Dunlop tires on their wheels. This agreement had a powerful effect upon the independent French bicycle makers, who practically had to follow their lead and use Dunlops. As for the Michelin house, it has never done so much in bicycle as in automobile tires, and has been committed to the clincher.

Puncture-Proof Bicycle Tires

One great trouble with the single tube was its tendency to become "porous," as it is called, due to some injury to the inner-tube layer allowing the air to travel through the fabric until it found various outlets through surface cuts in the tread or around the valve. It general-

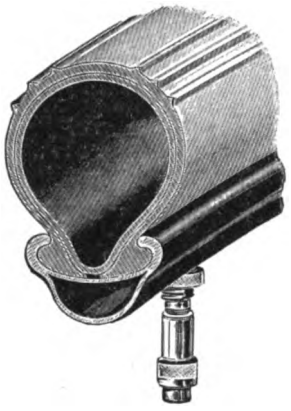

Palmer Cycle Tire—English

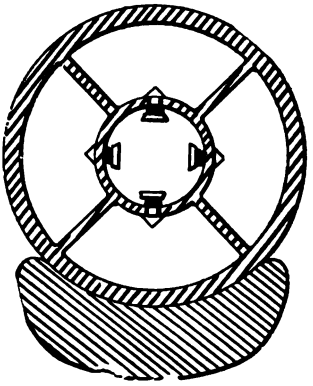

Chambered Cycle Tire—American

ly required a good tire repairer to meet this contingency. Various anti-leak fluids were put on the market for this purpose; viscous substances, which, when injected into the tire, filled up the silght breaks or flaws in the inner tube layer by oozing into the fabric, where it

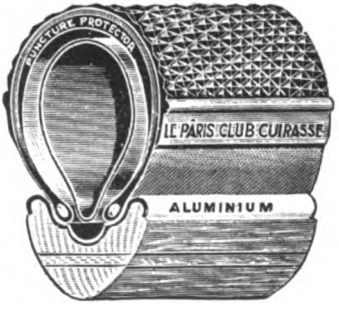

Armored Cycle Tire—French

dried and stopped the air pasage. "Porousness" was the source of much vexation to single tube users, before they properly understood the cause and its prevention. Sometimes the cause was a defective repair, due to the failure of the mushroom plug to cover the hole properly on the inside. Sometimes it was caused by a nail, which, be-

sides puncturing the tread, jabbed into the tire next to the rim. The best preventive, in a case of this kind, and, in fact, in treating all single-tube punctures, was to squirt some cement down through the tread upon the lower part of the tire next to the rim. The thick rubber solution would generally mend any ordinary rupture of the lower part of the inner-tube layer and thus prevent porousness. The "Vim Special," made by the Boston Woven Hose & Rubber Company, aimed

LARGEST OF ALL CYCLE TIRES
[American "Vim" tires 12 feet in diameter]

to prevent this same trouble by having two inner-tube layers separated by the fabric plies. If the "inner inner tube" became broken, the "outer inner tube" was expected to catch the fabric leak.

Puncture-proof bicycle tires have never been popular, mainly because of their inherent slowing effect. Various puncture-proof devices were suggested in England in 1891, but the first tire of the kind actually marketed came from France. The inner tube layer was reinforced within by thin rubber flaps, which overlapped. If a thorn pricked the tube, it was supposed that when it was withdrawn the

PENNSYLVANIA VACUUM-CUP BICYCLE TIRE

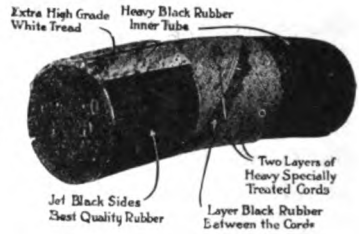
Extra High Grade White Tread
Heavy Black Rubber Inner Tube
Two Layers of Heavy Specially Treated Cords
Jet Black Sides Best Quality Rubber
Layer Black Rubber Between the Cords

KOKOMO CORD CYCLE TIRE

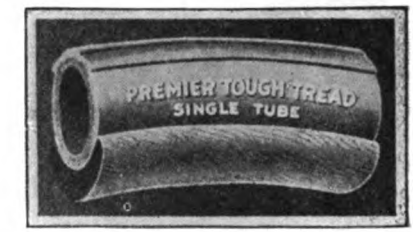

FISK PREMIER TOUGHTREAD TIRE

GOODYEAR "PATHFINDER" TIRE

"KOKOMO" DOTTED TREAD TIRE

position of the flaps would be slightly disturbed, so that the hole in the flap would not come over the hole in the tube. It really did work pretty well for awhile, though some leaking went on until the tube was patched. In England the "Self-Sealing" tire has had a good deal of favor for several years. The tube is reinforced within by a strip of soft, compressed rubber, the compression tending to close any hole automatically, the instant the piercing object is withdrawn. In the United States the idea was worked out along the lines of the Chase tire, which contained a layer of "felted" cotton between the tube and fabric.

Though there is probably as much inventive genius in America as in Great Britain, still the more radical departures have never thriven

CORRUGATED MOTORCYCLE TIRE
[G. & J. Tire Co., Indianapolis, Indiana]

MORGAN & WRIGHT MOTORCYCLE TIRE

GOODRICH MOTORCYCLE TIRE

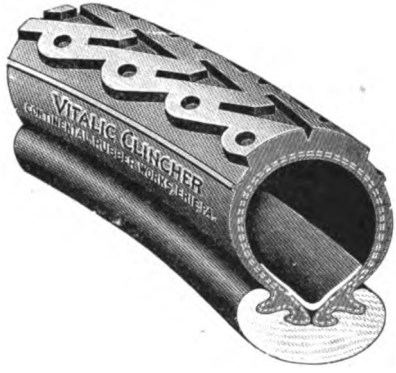

CONTINENTAL MOTORCYCLE TIRE

so well, nor have "freaks" in tire construction hung on so tenaciously as across the Atlantic. The English are very persistent; and while the American patent records are as full and rich as the British, the tire market in England has always been the most interesting of all. It is there that we find the greatest number of curious rims, fastenings, treads, fabrics, and types of tires. The tubeless tire, for instance, is essentially English, as is the turnbuckle fastening, the metal clincher (represented in the Grappler tire), and for that matter, practically everything else that is characteristic in tire making, except the single-tube type. The single-tube tire is often called "tubeless" in England, though this is inexcusable in one who professes to clearness in his terminology.

Increasing Popularity of Cycling

Of course the manufacture of bicycle tires is directly dependent upon the popularity of the wheel itself, which has had its ups and downs. Since its heyday in the early nineties the bicycle has had to divide favor with the automobile and the motorcycle, and for several years it seemed as if it would soon be relegated to the limbo of the past. But the bicycle came back. Good roads and the tendency toward country living are largely responsible. Today general interest in cycling is on the increase; numerous clubs are being formed; racing has been rehabilitated; and manufacturers have become active with strong publicity. The latter is fully justified by the high quality of their output and the fact that it really meets a genuine need. Bicycles are better now and more adequately equipped than in the old days

Kokomo Motorcycle Tire

when they cost several times as much. Tires are infinitely better. Half a million were made and sold in 1915, and the slogan of the bicycle manufacturers then became "A Million Bicycles for 1916"; they did the biggest business in a decade. Single-tube tires were used exclusively.

Motorcycle Tires

Midway between bicycle and automobile tires is a third class for the motorcycle, a field which grows yearly despite Henry Ford's gigantic output of small automobiles. Corresponding more nearly in size to bicycle tires, the construction resembles that for automobiles, because of the weight to be borne and the speed at which they are to be driven. Although single tubes were used for a time, double-tube clinchers with non-skid treads are the rule, as good traction is far

more important in a two than a four-wheeler. Of course motorcycle tires are subject to pucture and blowout the same as automobile tires, and it appears to be common opinion that the double tube principle facilitates wayside repairs. Most of the leading tire firms manufacture bicycle and motorcycle tires according to the appended table of stock sizes, some of them making a few motorcycle oversizes and most of them a few special racing sizes, small in bore but strong in fabric.

PRINCIPAL STOCK SIZES

Bicycle Tires Inches	Juvenile Bicycle Tires Inches	Motorcycle Tires Inches	Airplane Tires Inches
	14x1½		
	16x1½		
	18x1½		
	20x1⅜		
	20x1½ (Most used)		
			20x2
			20x2¼
			20x2½
	24x1⅜		
	24x1½ (Most used)		
26x1¼			
26x1⅜	26x1⅜		
26x1½	26x1½		
26x1⅝	26x1⅝		
26x1¾			
		26x2¼	
		26x2½	
			26x3
			26x4
			26x5
28x1⅛			
28x1¼			
28x1⅜			
28x1½ (Most used)			
28x1⅝			
28x1¾		28x1¾	
		28x2 (Racing Sizes)	
		28x2¼	
		28x2½ (Most used)	
		28x2¾	
		28x3	
		29x2¾	
		29x3	
30x1½			
30x1⅝			

S. A. E. STANDARDIZATION

The present S. A. E. motorcycle tire sizes are 2¼, 2½, 2¾ and 3-inch sectional diameters. In order to bring the S. A. E. table up to date and have it complete, the following sizes are adopted. These tire sizes conform to those adopted by the War Service Committee of the Rubber Industry of the U. S. A.

Nominal Tire Size		Oversize Tire		Tire Seat Diameter of Rim		
In.	Mm.	In.	Mm.	In.	Mm.	Type of Rim
26x2¼	60/535	None	None	21	535	BB
28x3	75/560	29x3½	90/560	22	560	CC

Circularization of the motorcycle industry in 1919 indicated that standard current practice includes only tire sizes which are mounted on the CC rim. These tire sizes were unanimously adopted by the society and in order that the rim specification shall be in conformity with this list of tire sizes the Tire and Rim Division recommends that the BB rim section be withdrawn from the present S. A. E. recommended practice for motorcycle rim sections. It is the opinion of both the Motorcycle and Tire and Rim Divisions that the BB rim section can be re-established as a standard should the use in the future of light weight motorcycles carrying the BB rim become general enough to warrant its inclusion in the standard.

Development of the Airplane Tire

Of a more highly specialized character may be mentioned airplane tires, which are being regularly manufactured by several firms now that aircraft has come to play such an important part in the national defense. In the early days of aviation, bicycle tires were employed, and as the machines became heavier some designers went so far as to adopt full size automobile sizes. While the latter answered admirably to protect the mechanism from the shock of landing, they were far too heavy and offered too much wind resistance. A good airplane tire must be both strong and light. These two qualities are somewhat antagonistic and conflicting. Airplanes of the present day are heavy themselves, intended to carry several passengers and often heavy loads besides, so that all unnecessary weight and bulkiness must be eliminated at every point. Thus a special type of pneumatic tire has been developed to meet these particular requirements. The sizes in common use on various types of American airplanes are as follows: 20 by 2, 20 by 2¼, 20 by 2½, 26 by 3, 26 by 4 and 26 by 5.

Most airplane tires of the present day are of a lighter construction than ordinary automobile tires, but heavier than bicycle tires. The Goodrich single-tube type in the three smaller sizes, for example, is of Palmer thread construction, whereas the three larger sizes for the heavier machines now common are all of regular double tube clincher type and fabric construction. The 26 by 5 Goodrich airplane tire has six plies of medium weight fabric and fits an "F" section automobile rim 16 inches from tire seat to tire seat and has the same grade of cover or tread stock as the Goodrich Black Bare-Foot automobile tire.

Cord construction has yielded live, springy tires of resiliency sufficient to aid the machine off the ground as well as to absorb the shock of landing, their large cross section resisting the lateral thrusts that often occur when a machine "sideswipes" the ground. Airplanes intended for war scout duty are usually provided with tires an inch smaller in cross section, the reduced weight permitting a larger gasoline tank with consequent increased range of action.

Goodyear airplane tires, representing an extensive experience of many years, are of cord fabric construction, it being believed that several layers of small cords produce the strongest and most satisfactory airplane tire for its weight.

Further reference to the cord type of airplane tires is made in the chapter on cord tire manufacture.

CHAPTER XXX
THE MANUFACTURE OF BICYCLE AND MOTORCYCLE TIRES

Bicycle Tires

BICYCLE tires are of two different sorts; the single tube and the double tube tire. In the former, the tire is made in one piece, air tube, carcass and outer covering being integral and inseparable; in the latter, the air chamber, or inner tube, is detachable and may be removed for repairs or replacement if necessary. The simplest form of bicycle tire, of course, is the single tube, or, as it is sometimes called, the "hose pipe". It always has been and still is used in the United States more than any other kind. In Europe, however, the double tube—that is, the tire casing with a rubber inner tube—seemed to appeal to the bicyclist, and has remained in general use, the single tube never having gained much of a foothold. This chapter covers the bicycle tire casing itself, the story of the inner tube being told in a subsequent one.

A Brief Summary of Methods and Materials

Described in ordinary English, the manufacture of a bicycle tire is an exceedingly simple operation. It was a problem, however, that taxed the ingenuity of the most expert rubber men for a long time; that is, to make the tire commercially. In the earlier days, with the state of the art so young, had they been confronted with the problems of manufacturing automobile tires, it is more than probable that the best manufacturers would have believed it to be impossible.

The bicycle tire consists of two materials, rubber and fabric. The rubber is to give resilience, to keep out moisture and to hold the air in place. The fabric is to give form, strength and to keep the rubber from stretching and bursting under pressure. The parts are first formed in strips and cemented and rolled together, being shaped up in the general form of the tire, and later put in molds and vulcanized. In different factories there are a variety of methods by which this manufacturing is done. In some the whole of the work is done by hand. In others there are auxiliary machines designed to cover various processes and to save a certain amount of labor. Before getting entirely away from the beginning of the tire making—that is, the material—it might be well to say that pure rubber is by no means the best thing

for tire covers or tire lining. Long experience has proved that certain compounded stocks give better service, are less likely to tear or wear, and are very much less affected by sunlight, air, or salt water.

When it came to the selection of fabrics almost everything available was tried, slik, linen, hemp, indeed, every fabric that the loom furnished, but in the end cotton was found to be the best all around material that could possibly be used, and long staple cotton of the Sea Island or Egyptian type the best of the cottons.

Single Tube Bicycle Tires

As already intimated, single-tube bicycle tires are composed of three parts, subsequently vulcanized into one homogeneous whole, first, the inner tube, or air holding part; second, the encasing fabric, or strengthgiving part; and third, the outer cover, or wearing part.

The plied up calendered stock intended for the lining or air tube is cut in strips of proper width at the calendar and on a zinc covered bench, cross cut to tire lengths by hand.

Tire fabric frictioned on both sides is bias cut of a width sufficient to make the desired number of plies and allow correct overlap. The cover or tread rubber is cut and prepared for the tire maker in the same manner as the tube rubber. The valve nipple is specially built, molded and partly cured in advance of the tire building.

Single tube tires are built up by two distinct methods; first, the "pole" method; and second, the "drum" method. Details vary in different factories. By one variant of the "pole" method the parts are assembled briefly as follows:

Building Up by the Pole Method

The strip intended for the tube layer is perforated at the point where the valve stem is to be located and the molded and partly cured valve nipple is securely attached by cement with its tubular portion projecting through the tube sheet and patched for protection against leakage of air. The tube strip is next dusted with soapstone on what is to be its inner surface and its edges joined by an overlapping of about half inch in width as it is brought together around the smooth polished steel mandrel which determines its size.

Following this the bias duck strip is applied and smoothly rolled into place, carefully excluding trapped air. Provision for splicing is made by proper stepping back of the duck plies at either end of the straight built tire.

The rubber cover and tread ply are rolled on in similar manner to the duck, being stripped back at the ends. The tire is then removed

from the pole for splicing. The tube ends are joined and reinforced by a thin rubber strip of indentical quality. The tire is inflated sufficiently to round it out and the gap in duck and cover plies filled in with suitably shaped pieces of each.

More in detail, by another accepted variant of the "pole" method a tube of rubber gum and frictioned fabric is rolled on to a pole or mandrel of wood or cold drawn weldless steel tubing of suitable diameter, the outer diameter of the pole determining the inner diameter of the finished tire. A strip of rubber gum of the right length and the proper width to form a suitable lap is usually wrapped around the pole to form the air tube. As uncured rubber is exceedingly sticky, the inner surface of the tube stock must first be treated with soapstone powder to prevent it from sticking to the pole, or the opposite sides of the built-up tire adhering together later on. After being wrapped around the pole, the outer surface of the tube stock is treated to an application of gasoline, which revives any of the sticky qualities that may have been diminished by contact with the hands, when it is ready for application of the fabric.

Two plies of woven or thread fabric are ordinarily used over the rubber, although some special tires have two extra plies on the tread and extending about half way up the sides. The fabric is cut into 45-degree bias strips of proper length and wide enough to extend around the tube and provide a comfortable lap. The fabric laps are located over the lap in the air tube gum on what will be the inner or rim side of the tire opposite where the tread is to be applied. After each ply is added it is gone over with a hand roller or put through a rolling machine to insure perfect contact. For the sake of strength the second layer of fabric is applied with its warp and filler threads running directly at right angles to those of the first layer. On the opposite side from the laps of gum and fabric the tread rubber is then applied, and afterward the cover rubber is placed over the whole. This cover rubber is usually a tougher compound than any of the other stocks used, for it is this layer that comes into contact with the ground in service.

Joining the Ends

The tire is now removed from the pole and the two ends are joined together and built up the same as the rest of the tire, which converts the straight, open-end, hose-like tube into a hollow ring having, when first completed, no opening at all. To facilitate this, the strips of both fabric and rubber were at the outset cut to proper length to form stepped-down ends for splicing. Each end of the tube is slipped over the end of a smooth, round-ended rod of hard wood, perhaps

30 inches long and just large enough to fill the tube, which has now become quite substantial by the addition of the fabric plies. The ends are brought to a fixed uniform distance apart and the joining affected ply by ply. First the air tube is joined; then the fabric plies, the tread rubber and finally the cover.

The exact details of the operation of joining the ends of single tube bicycle tires vary somewhat in different factories. In one well-known establishment the method is as follows:

As the tire comes to the joining tables, the fabric does not cover the entire inner tube, but leaves an inch or two of the inner end projecting at each end. The length of the fabric strips is uniform; the bolt of fabric is cut into bias strips, and each strip has a nearly three-cornered piece, torn off one end. This leaves the fabric strip with one long side and one short side united by the two ends which incline toward each other, and hence form a spiral line of the fabric strip edge at each end, after it is applied to the inner tube.

The pointed ends of the fabric are brought to fixed uniform distance apart, so that the width of the point of the torn off pieces of the fabric strips will cover them with the proper lap, and one end of the inner tube is turned back on itself and cemented, and then turned back over the other end, so that finally the narrow part can be applied to lap over and wrap around to cover the spirals with a suitable lap, and thus complete the joining of the inner tube and the fabric in a highly ingenious and extremely substantial manner, the lap being everywhere of a uniform width and either spiral or longitudinal in direction, so as to lie in the best possible position to endure wear and avoid unequal flexure of the tire in service.

In practice, the pointed ends of the fabric do not come on the sides of the tire, but exactly on the bottom and thus the whole tire is left thin on the sides so that it can bend with the least loss of power when in use on the cycle wheel.

To remove the rod of wood, a short lengthwise cut is made through the laps of fabric where the structure is strongest. Through this cut the rod is slipped out and later the mushroom head of the rubber air nipple is introduced to the inside of the tire.

VALVING

The first step in seating the air-nipple is to flatten the tire at the cut so that the cut comes at one edge, and then, having a round hollow punch, the same diameter as the nipple stem, set half-way on the double tire-edge at the middle of the long cut, the workman gives the punch a blow with a hammer and nips out a half round piece from both edges

of the tire at once, so forming, when the tire is flattened out the other way, a round seat for the nipple-stem in the tire walls.

The slit in the tire is distended with the fingers, and that part of the interior where the air-nipple head is to be seated is thoroughly coated with rubber cement. A liberal dressing of soapstone powder is applied to the inside bottom-half of the tire circumference and then, first giving the nipple-head a coating of cement on the stem side, the nipple head is doubled away from the stem and slipped, so folded, through the slit in the tire.

On letting go of it, the folded nipple head immediately spreads out flat and the cut in the tire closes by the elasticity of the walls, with the stem in the half round seats punched for its reception. Then the tire is flattened down on a smooth iron block with the valve tube standing upright, and the tire cut is carefully manipulated with the fingers to close it perfectly at every point, and the whole of the adjacent parts are hammered lightly to insure a completely cemented union. Finally, with a sail needle threaded with small twine, and a leathern palm instead of a thimble the slit in the tire is sewed up while the cement is yet green, making the whole length of the cut as strong as it was before the fabric was slit to remove the wooden supporting rod.

The air valve stem is then coated outside with cement and slipped into the rubber nipple, which is wound with several close, even turns of fine wire over a recess in the outside shell of the air valve to prevent its being forced out by internal pressure.

Molding

The tire is then placed in a mold, the side with the tread rubber against the tread portion of the mold, upon which is engraved the non-skid design, and the mold is closed in a hydraulic press. The tire is inflated to create an internal pressure, which forces it evenly against the mold, and is cured in a press vulcanizer. Upon removal from the mold the tire is ready for use. Some manufacturers do not fasten in the metal valve stem or insert the "valve insides" until after vulcanization. Most of the single tube bicycle tire valves now used are held in place by a metal ferrule about the shank of the valve which is contracted by means of a special machine to effect an air tight joint.

Testing

All factories test every tire separately before shipment. The tires are first inflated to high pressure; then, after remaining inflated for 24 hours, they are immersed in water, and no tire that gives even the faintest sympton of a leak is permitted to leave the premises.

Forming the Air Tube Separately

It was formerly the custom, and still is in some factories, to form the air tube basis of the single tube tire separately by machinery or by hand, after which a pole of wood or steel was inserted and the fabric and tread plies built up on it. It may also be run on a tubing machine. By one hand method a flat strip of rubber gum with cemented edges was drawn through a die. By another, the strip of rubber gum was folded over a long oval wooden core strip and the lap pressed together with the fingers, and then gone over with a hand roller to unite the edges, after which the completely formed tube was slipped off the wooden core strip. One end of the tube was then placed over the open mouth of an air pressure pipe and the tube slightly inflated and distended, making it possible to introduce the building pole very easily. As formerly made in some factories the air tube was not lapped, the edges of the gum strip being solutioned with quick acting cement and butted together by drawing it lengthwise through a metal staple or ring in the bench. This simple and effective device brought the two lateral edges of the strip evenly together, where the cement held them. Later a machine was devised to form endless tubes by this method and to cut them into the required lengths. It was found necessary, however, to reinforce the joint thus formed by laying over it a narrow strip of gum, and so the simple lap has come to be preferred.

Building Up by the Drum Method

By the "drum" method of building single-tube tires, the tire is built around a drum over a strip which takes the place of the pole in the "pole" process. The operations are of the same general character as building on a pole, except that the tire is built and spliced at the same time. The cure in a mold is the same as for a pole-built tire.

Cord Bicycle Tires

In place of the frictioned fabric carcass over the air tube, one or more plies are sometimes woven around the joined rubber tube by a braider and the cover rubber put on the outside.

Kokomo cord and Pye-Musselman cord bicycle tires are made with two plies of cord fabric, cut on the bias and applied so that the cords run diagonally and transversely, each ply at right angles to the other with a layer of rubber between the cords. The carcass therefore consists of a continuous band of cords over its entire circumference without joints or overlapping ends.

Unlike most cord fabrics, which are woven in a loom with occasional small supporting filler threads, the Pye-Musselman cord fabric

is made by winding a fine rubber impregnated cord upon a large rotating drum with the successive turns in close proximity and parallel to each other so that they adhere in fixed relative position. Bias strips are then prepared by cutting through the winding on a line running spirally along the drum. Two of these bands are then laid together with their threads crossing at an acute angle to furnish the building fabric for the tire carcass.

Cord bicycle tires are fast, strong and very durable; easy and smooth riding, hard to puncture, immune to stone bruises and easy to

Bicycle Tire Building Room

repair. In fact they possess many of the good qualities of the cord automobile tire. Professional bicycle riders use them extensively.

Molding Air Nipples

Like many other so-called mechanical goods, which cannot readily be formed by cutting and lapping together sections of gum cut from sheets or strips, the air nipples in which bicycle tire valves are placed are formed in cast iron molds. These molds are constructed in sections so as to permit insertion of the rubber and removal of the finished goods. The hollow parts are made precisely the outside shape of the article, and with them are metal cores to assist in forming and curing the article to be produced, both being finished and polished to give the work a smooth surface. The parts are accurately machined to

size and are used hot and under considerable pressure to squeeze the rubber into the cavities of the mold.

The air nipple consists of two parts, the hollow stem and the mushroom head. The stems are made by hand; sheet rubber is cut into strips wide enough to roll around a wire former and press the edges firmly together with the fingers, forming a substantially joined seam. The stock for the nipple heads is in the form of squares of sheet rubber.

The air nipple mold is in three pieces for each nipple to be molded; first, a rod which forms the hole in the nipple stem, secured in a cast iron base block; second, a round cast iron part cupped out on one end to the shape of the nipple head, and having a hole the size of the nipple stem through its center; third, a round cast iron block, flat on both ends, and having a central hole just big enough to slip on the rod which makes the hole in the stem. Twelve of the stem-hole rods, or wires, are driven into one long cast iron base block.

The first operation is to slip a stem tube on each pin. Next the round cast-iron bottom part of a mold is placed over each of the tubes and stems, and the base block of the mold is turned down on its bottom on the bench. Then the square piece of sheet rubber which is to form the nipple head is pressed down on the stem-hole rod, tearing a hole through the middle of the soft stock. Finally the round cast-iron block, which forms the upper part of the mold, is slipped on the top of the stem hole rod, and squeezed down. When all the molds are capped, each mold is exactly the shape inside of the finished nipple, and has enough rubber in it to fill it full, and a little more, the surplus stock being squeezed out at the joint between the two round parts of the mold.

When all the molds are capped the nipples are vulcanized in a platen press, the heat causing the rubber to flow together and join into one solid piece. The molds are then removed from the press, the top of the molds taken off and the completed nipples pulled off the pins by grasping the mushroom head between the thumb and forefinger.

Double Tube Bicycle Tires

Double tube bicycle tires are of two general classes, as follows:

1. Clincher tires, both double and single clinch, with either butt-end or endless inner tubes.

2. Dunlop wire edge type with endless inner tube.

Formerly there was a third class, the split laced casing with butt-end inner tube, a development of the "hose-pipe" tire.

Dunlop Bicycle Tire

The Dunlop form of bicycle tire casing consists of plies of bias-cut light weight frictioned duck made endless and with the edges turned and sewed over spring steel wire circles or hoops. Upon this as a base, a vulcanized, endless tread band, backed with light friction fabric is attached by a coating of rubber cement.

This form of construction conserves the strength of the tire fabric because that portion of the tire is not subjected to the heat of vulcanization. The tire is securely held in place on the rim by inflation and for its application and removal no tools other than one's hands are required.

The Dunlop tire is usually built on a flat-surfaced, pulley-like, expanding steel drum, having grooves turned in its face near the edges in which the tire beads are formed and the non-skid design engraved on the surface between them. The rubber tread with its thickened center, previously run out by a tubing machine, is first wrapped around the drum, skived at the ends and lapped. The required number of plies of frictioned fabric cut into bias strips are next applied with their ends lapped, and then the beads are built in.

Light wires are employed in both the soft bead clincher and wired-on types. Two wires are used for each bead core. They are brazed together to form a circle, which must be the exact diameter required, as the wires determine the size of the finished tire. The wires are placed on the drum outside the fabric and the drum is expanded until the wires are drawn tight in the grooves. The fabric is now lapped over the wires from each side and throughly rolled down.

Some manufacturers build the fabric carcass first on a smooth faced drum, remove it from the drum and stitch down the turned over fabric on a sewing machine just inside the bead wires, after which the tread is applied and rolled down and the built-up casing placed on an engraved drum for curing and molding the non-skid tread.

The built-up tire is wrapped firmly to the drum with dampened cloth strips under tension and cured in open steam. About twenty tires are usually placed on an iron truck and run into a horizontal vulcanizer. The wrapping is so tight that when the tread softens during the cure the pattern engraved on the drum is imparted to it. Upon removing the drum from the heater, the wrappings are removed, the tires stepped off and turned right side out, when they are ready for use. With this sort of tire an inner tube similar to an automobile tire is used.

Many manufacturers finally form the tire into the circular cross sectional shape in which it is to be used. This is done by means of an expanding U-shaped ring fitting on a spider chuck having six extensible arms which may be simultaneously operated from or towards the center. By expanding the ring on this chuck, the tire conforms to the shape of the ring, and a short additional cure in a vulcanizer sets the tire in this shape.

Clincher Type Bicycle Tire

The clincher type tire is distinguished by having an outwardly projecting beaded edge on either side of its open inner circumference. These beads form a very secure grip, holding the tire by the pressure of inflation in a rim with counter corresponding form.

These beads are specially constructed either with cord or fabric centers surrounded by the duck plies, or of stiff rubber compound instead of wire, and given form by vulcanization on the curing drum or in the tire mold.

The tire is constructed on a drum like Dunlop tires, or over a metal core which remains in place and is enclosed with the tire in the mold, furnishing an internal support during vulcanization.

Split Laced Bicycle Tire

Some of the earlier double-tube bicycle tires, such as the Morgan & Wright, were of the endless "hose-pipe" variety with a short slit along the rim side of the tire through which the inner tube, in the form of a tubular strip of suitable length, was drawn by means of a weighted cord or wire and the slit then laced shut. These tires were built on a jointed annular steel mandrel of circular cross section having a short removable section. The location of this part was indicated on the tire as built, and after curing, a short slit was cut along the center line of the inner periphery, the joint in the mandrel was opened and the removable section taken out, when the mandrel could be removed through the slit. The same slit was used for inserting the inner tube and the holes for lacing it shut were punched along both edges in a single operation by a special machine.

Government Bicycle Tire Specifications

Standard bicycle tire construction, clincher type, is clearly shown by the United States Government specifications prepared by the Motor Transport Corps of the United States Army, the War Service Committee of the Rubber Industry, and the Special Board of Officers, convened under paragraph 30, S. O. 91, W. D., 1918, which follow:

Clincher Bicycle Tires
Sizes 28 by 1½ inches and 28 by 1⅝ inches
Fabric Construction
Specification No. 1221A. November 1, 1918

1. General. (a) Bicycle pneumatic casings manufactured in accordance with this specification shall be of fabric, or cord construction of the sizes known as 28 by 1½ inches and 28 by 1⅝ inches.

(b) The manufacturer of casings must guarantee them to be free from defects in workmanship and material.

(c) The casings shall be plainly marked with the manufacturer's name and size of tire.

2. Type. All casings furnished on this specification shall be of the manufacturer's standard non-skid double clincher type, designed to satisfactorily fit the standard 28 by 1½ inches single clinch all steel bicycle rim.

3. Construction. (a) Carcass of the casings must consist of two plies of fabric frictioned both sides.

(b) All fabric shall be square-woven (26 by 26) having a tensile strength for both warp and filler of not less than 110 pounds per inch or its physical equivalent of cords as approved by the Government. Methods of testing to be the same as provided in the specifications for pneumatic automobile casings.

(c) All fabric must be thoroughly dried in accordance with standard manufacturing practice before it is started through the process of rubberizing.

(d) The tread of the casing shall not be less than 0.120-inch thick.

(e) The sidewall of the casing shall not be less than 0.032-inch thick when measured on the cured casing.

4. Physical Measurements and Tests. (a) The cross-sectional diameter of each tire inflated to 40 pounds shall not be less than 1 29/64 inches in 28 by 1 1/2 inches and 1 37/64 inches in 28 by 1 5/8 inches.

(b) Strength of the union between plies of fabric shall average ten pounds or more per inch using the standard dead weight friction test as provided in the specifications for pneumatic automobile casings.

(c) The strength of the union between tread and plies or between sidewall and plies shall average nine pounds or more using the standard dead weight friction test as above provided.

5. Flaps. Each casing shall have a flap in accordance with the standard commercial practice.

6. Compounds. (a) Tread.—The tread shall be made from and have the characteristics of a compound containing at least 55 per cent by volume of the best quality new wild or plantation rubber. The minimum tensible strength shall be 1,600 pounds per square inch with a minimum elongation of 400 per cent (2 to 10 inches) as determined by the average of four test pieces when stretched at the rate of twenty inches per minute. The test pieces shall be cut longitudinally and shall be ¼-inch wide of a gage length of two inches, the ends being gradually enlarged to a width of approximately one inch. The permanent set determined by the average of four tests with test pieces as above, shall not exceed 25 per cent after an elongation of 400 per cent (2 to 10 inches) for ten minutes. All tests shall be made at a temperature between 65 degrees and 90 degrees F.

(b) Friction.—The friction shall be made from and have the characteristics of a compound containing at least 65 per cent by volume of the best quality new wild or plantation rubber.

(c) Sidewalls.—The sidewalls shall be made from and have the characteristics of a compound containing at least 55 per cent by volume of the best quality new wild or plantation rubber. The minimum tensile strength of the sidewall rubber shall be 1,200 pounds per square inch with a minimum elongation of 400 per cent (2 to 10 inches). The permanent set shall not exceed a maximum of 25 per cent as determined by the average of four tests as described in 6 (a).

(d) Compounds shall be free from ingredients known to the rubber trade as oil substitutes.

(e) The manufacturer must state the amount and kind of reclaimed rubber used in all compounds.

(f) All above test pieces must be cut from casings.

7. Inspection. The Government reserves the right to make any inspection, test or analysis necessary to insure the product meeting all requirements of this specification.

8. Tubes. The inner tube shall meet the specifications of the automobile and motorcycle tubes, with the following exceptions: (a) minimum pole size shall be 1-inch; (b) minimum gage shall be 0.048-inch; (c) valve shall be Schrader's 1022, or approved equivalent.

9. Packing. Packing shall be as per specifications accompanying the request for bid.

Motorcycle Tires

All American motorcycle tires are of the double-tube clincher type. They are built by two different methods; first, the "core and mold" method; second, the "drum" method.

Most motorcycle tires are build up on a core and then cured in a mold like automobile tires. The carcass consists of three or four plies of rubber coated cotton fabric, cut on the bias and stretched over an annular iron core. In building three-ply tires, the bead strips of semi-hard rubber compound are placed in position on the sides following the first ply of fabric. The second and third plies are next pulled on and rolled down over the beads. A strip of tread gum entirely covering the outside of the tire is then applied. This tread gum is usually run on a tread profiling calender to make it thicker in the center like many bicycle treads.

In building four-ply tires, two plies are put under the beads and two over them. Large size motorcycle tires have a breaker strip coated with cushion rubber placed between the outside ply of fabric and the tread. This strengthens the union between the tread and fabric, and distributes the shock of sudden bumps caused by holes and stones in the road.

The built-up casing, with the core still inside, is placed in a mold, and vulcanized in a heater press under hydraulic pressure. After the cure, the tire is removed from the mold and the tire pulled off the core.

Semi-hard rubber beads are capable of considerable stretch so that the tires can be pulled off a one-piece core without difficulty.

By the "drum" method motorcycle tires are built and cured like double-tube bicycle tires, as already described. First, the tread rubber is wrapped around the drum, next the outside ply of bias fabric. then the middle ply, followed by the beads, and finally by the inside ply or plies of fabric.

After a wrapped cure in open steam, the casing is sometimes stripped from the drum and sent immediately to the trade. Some manufacturers, however, inflate the tire over an inner tube on a rim and put it into a vulcanizer for a few minutes to set it in the shape in which it is to be used. Others wrap it down on an annular core, thus giving it a shape cure.

Government Motorcycle Tire Specification

Standard motorcycle tire construction, clincher type, non-skid tread and fabric carcass, is clearly shown by the United States Government specifications prepared by the Motor Transport Corps of the United States Army, the War Service Committee of the Rubber Industry, and the Special Board of Officers, convened under paragraph 30, S. O. 91, W. D., 1918, which follow:

PNEUMATIC MOTORCYCLE CASINGS (NON-SKID)
Sizes 28 by 3 inches and 29 by 3½ inches
FABRIC CONSTRUCTION
Specification No. 1064A
November 1, 1918

1. General. (a) Pneumatic motorcycle casings manufactured in accordance with this specification shall be of fabric construction of the size known to the trade as 28 by 3 inches and 29 by 3½ inches.

(b) Casings must be designed to carry a load of 325 pounds, when inflated to 40 pounds per square inch; 400 pounds at 45 pounds for 29 by 3½.

(c) The manufacturers of casings must guarantee them to be free from defects in material and workmanship.

(d) Casings shall be plainly marked with manufacturer's name, serial number and size of tire.

(e) As soon as possible it is desired that all casings be marked with the equivalent metric sizes as recommended by the Society of Automotive Engineers.

2. Type. All casings manufactured in accordance with this specification shall be of the manufacturer's standard non-skid clincher type, designed for the S. A. E. clincher motorcycle CC rim of the size 28 by 3 inches.

3. Construction. (a) Splices on the first ply of fabric shall be gum-stripped.

(b) Carcass of casing shall consist of four separate plies of tire fabric, with friction coat on two sides and skin coat on one side. The gage of one ply frictioned on two sides and skin-coated on one shall be at least 0.043-inch. Each ply shall have not more than two splices which must be at least seven inches apart measured on the circumference of the casing. The splices in the casing shall be at least three inches apart when measured on the circumference of the casing.

(c) All fabric must be square-woven (23 by 23) from Egyptian long staple cotton or its physical equivalent as approved by the Government, weighing 17¼ ounces to the square yard with an allowable variance of plus or minus 3 per cent.

(d) All fabric must be thoroughly dried according to standard manufacturing practice, before it is started through the operations of rubberizing.

(e) The usual methods of inspection used by tire companies in commercial practice to discover defects in each roll of fabric shall be employed. All fabric shall be tested in an approved testing machine

to determine the tensile strength in the following manner; the distance between the grips on the machine shall be approximately three inches, and the separation of the jaws shall be at the rate of 20 inches per minute. Six samples shall be cut from each roll in such a manner as to eliminate any unnecessary waste of material. Three samples shall be cut longitudinally to determine the warp strength and three samples shall be cut transversely to determine the filler strength. The samples shall be prepared in the following manner; unravel to 23 yarns (1-inch width); fabric shall be dried one hour and thirty minutes at 110 degrees C. Breaking test shall be completed within thirty seconds of time of removing test strip from oven. The results must show a tensile strength of not less than 165 pounds per inch width for either warp or filler.

(f) Beads shall be constructed with a core filler as in standard commercial practice.

(g) There shall be a cushion of rubber compound applied over the fabric which shall be wider than the breaker. The minimum gage of this cushion shall be 0.0325-inch; 0.045 for 29 by 3½.

(gg) On 29 by 3½ inch tires one chafing strip of square-woven fabric weighing not less than 8 ounces per square yard shall be used on each side of the casing. The chafing strip shall extend upward on the side of the casing at least ⅜-inch from the channel of the bead.

(h) Over the cushion there shall be at least one breaker strip of open-weave fabric such as is used in standard commercial practice, coated on both sides with a rubber compound having the physical and chemical properties of a nature to form a perfect union between the cushion and tread when the cure is affected. This breaker strip shall have a minimum width of 1⅞ inches; 2¼ inches for 29 by 3½. Breaker shall be made from long-staple cotton weighing not less than 8 ounces per square yard.

(i) The tread of the casing shall not be less than ¼-inch thick in the center (5/16-inch for 29 by 3 1/2) 1/8-inch of which shall be the minimum thickness for that part of the tread under the middle of the non-skid portion.

(j) The sidewall of the casing shall have a minimum thickness of 0.045-inch; 5/16-inch for 29 by 3 1/2.

4. Physical Measurements and Tests. (a) Cross-sectional diameter of each tire inflated according to the recommended weight and load schedule of the S. A. E. shall not be less than 2 15/16 inches nor more than 3 3/10 inches; 3 7/16 for 29 by 3 1/2.

(b) Tires shall be capable of withstanding water pressure of 250

pounds per square inch without apparent injury; 275 pounds for 29 by 3½. This test to be made at the discretion of the inspector.

(c) The strength of the union between plies of fabric shall average 16 pounds or more per inch using the standard friction test, viz., a section of the casing is to be cut one inch in width measured circumferentially. The plies are to be started and pulled down two inches at one bead, which bead is to be clamped in the jaws of a standard friction testing machine. The test shall be made on any ply of fabric in accordance with the standard dead weight friction test. The rate of separation shall not be more than one inch per minute.

(d) Strength of the union between the breaker and tread and between the breaker and cushion shall not be less than 28 pounds per inch using the standard dead weight friction test as above provided.

(e) Strength of the union between cushion and carcass shall be not less than 16 pounds per inch using the standard dead weight friction test as above provided.

(f) Strength of union between sidewall and carcass shall be not less than 10 pounds per inch, using the standard dead weight friction test as above provided.

5. Road Test. Manufacturers bidding on government requirements must meet the following conditions:

(a) Casings will not be given consideration unless the maker submitting the bid furnishes an affidavit stating that he has maintained and will continue to maintain at least one motorcycle used exclusively for test work, and that this same machine averages at least 1,000 machine miles per machine per week.

(b) The speeds, loads, tire sizes, inflations and road conditions must be such that the casings are properly tested. The Government may appoint an inspector to see that the above conditions are complied with.

(c) A bidder must supply an affidavit before delivering any casings to the Government, stating that the casings to be delivered are the same cross-section and practically duplicate, in construction and material, casings which he has previously tested in accordance with paragraphs (a) and (b) and a sufficient number of casings satisfactory to the Government, not less than six, have averaged on the rear wheels at least 4,000 miles.

6. Lining. The inside of each casing shall be properly lined in accordance with the standard practice of the tire manufacturers.

7. Flaps. Each casing shall have a flap cemented inside of the casing in accordance with standard commercial practice.

8. Compounds. (a) Tread.—The tread shall be made from and have the characteristics of a compound containing at least 65 per cent by volume of the best quality new wild or plantation rubber. Compound shall be free from ingredients known to the rubber trade as oil substitutes. The minimum tensile strength shall be 2,200 pounds per square inch with a minimum elongation of 450 per cent (2 to 11 inches), as determined by the average of four test pieces when stretched at the rate of 20 inches per minute. The test pieces shall be cut longitudinally and shall be ¼-inch wide over a gage length of two inches, the ends being gradually enlarged to a width of approximately one inch. The permanent set determined by the average of four tests with the test pieces as above shall not exceed 25 per cent after an elongation of 400 per cent (2 to 10 inches) for ten minutes followed by a rest of ten minutes. All tests shall be made at a temperature between 65 and 90 degrees F.

(b) Friction and Cushion.—These shall be made from and have the characteristics of a compound containing at least 75 per cent by volume of the best quality new wild or plantation rubber. The compound shall be free of ingredients known to the rubber trade as oil substitutes and/or reclaimed rubber.

(c) Sidewall.—The sidewall shall be made from and have the characteristics of a compound containing a minimum of 65 per cent by volume of the best quality new wild or plantation rubber. Reclaimed rubber to the extent of 15 per cent by weight of total compound is allowed, but the amount and kind must be declared by the manufacturer. Compound shall have a minimum tensile strength of 1,500 pounds per square inch and a minimum elongation of 450 per cent (2 to 11 inches) and a maximum set of 25 per cent, tested as specified in 8 (a). The compound shall be free of ingredients known to the rubber trade as oil substitutes.

(d) All test pieces must be cut from casings.

9. Inspection. The Government reserves the right to make any inspection, test or analysis necessary to insure the product meeting all requirements of this specification.

10. Wrapping and Marking. All casings shall be spirally wrapped according to standard practice and properly labeled on the outside showing the size and type, and name of manufacturer. A label with the month and year of manufacture stamped on it shall be pasted in a conspicuous place.

11. Packing. Packing shall be as per specifications accompanying the request for bid.

Bicycle Tire Compounds

For friction or skim coating the fabric plies, a strong adhesive composition is required. For the tread a tough stock for wearing service. Sometimes a special "oil-proof" compound is advertised as being used as a protection against the deteriorating influence of oil on the roads.

Friction Compounds for Bicycle Tires

Coarse Pará or smoked sheet	24
Cameroon rubber	24
Pontianak	10
Mineral rubber	10
Fossil flour	18
Litharge	7
Sulphur	7

Fine Pará or plantation rubber	15
Accra buttons	23.5
Cammeroon rubber	7
Unvulcanized tire scrap	23.5
Litharge	7
Whiting	17
Lime	2
Sulphur	5

Bicycle Tire Cover and Tread Compounds

Coarse Pará or smoked sheet	58.5
Fossil flour	3.0
Litharge	7.0
Lampblack	1.0
Sulphur	2.5
Whiting	14.0
Zinc oxide	14.0

Fine Pará or plantation rubber	78.25
Litharge	8.70
Whiting	8.70
Sulphur	4.35

Bicycle Tire Tube Compounds

Pará or plantation rubber	79.30
Zinc oxide	9.50
Blue lead	1.60
Litharge	1.60
Sulphur	4.00
Lime	0.80
Paris white	3.20

Fine Pará or plantation rubber	86.00
White substitute or soft reclaim	2.33
Lime	2.33
Sulphur	9.34

Tube for Racing Tires

Fine Pará or first latex rubber	72.0
Pinky Madagascar	18.0
Litharge	1.0
Sulphur	5.0
Lime	0.5
Zinc oxide	3.5

Cover for Racing Tires

Fine Pará or first latex rubber	66.5
Pinky Madagascar	16.5
Zinc oxide	13.25
Latharge	.5
Sulphur	3.25

Red Bicycle Tires

Pará or plantation rubber	52.00
Antimony sulphide	17.50
Red reclaim	8.70
Paris white	21.80

The above are simply suggestions. Thousands of variations are possible. Scores of changes in grades of rubber, in plastics and in the use of high grade reclaims, in methods of manufacture and in curing are possible and often many are beneficial. Organic accelerators are also often used to hasten the cure. In other words, individuality in tire compounding is the rule in all successful manufactories.

Vulcanization of Bicycle Tires

The vulcanization of bicycle tires may be effected by one of several methods.

1. Open steam heat method.
2. Mold heated by open steam.
3. Mold in steam jacketed press.

Open Steam

In the application of this method the tire, if made on a straight pole and jointed later, is inflated on a metal rim, the tread encircled with a ply of plain fabric and then tire and rim tightly bound spirally with strips of narrow, wet fabric. In this condition the tire is ready for vulcanization.

In the case of a tire made on an endless mandrel the wrapping is made direct, since the mandrel supplies the necessary support. The form of vulcanizer used for the open steam heat method is that of a plain horizontal boiler with hinged door at one end closed tight against a gasket by bolts and nuts. As is the case with all vulcanizing apparatus it should be supplied with the customary steam gage safety

valve, thermometers and steam trap, and also with apparatus for the automatic control of the time and temperature of the cure.

Mold Cure in Open Steam

The tire, mold cured in open steam, is inflated in a two-part mold and cured in a vulcanizer of the same sort and with the same equipment as that described above.

Mold Cure in Steam Jacketed Press

The so-called "Doughty" press is employed in this method. It consists of a fixed upper steam chamber of annular form and a corresponding lower one that is raised and lowered by a hydraulic plunger. The halves of the tire mold are attached by bolts to these fixed and moveable steam chambers and are thus supplied with heat. The tire for curing is adjusted in the lower half of the mold, the press closed, and by means of a spring pipe connection the tire is inflated with steam. In this way the tire is not only made to fill the mold, but is vulcanized with great rapidity, the cure being complete in not over seven minutes.

CHAPTER XXXI

BICYCLE TIRE MAKING MACHINERY

ASIDE from straight steel poles or mandrels much like those used in inner tube manufacture, which are employed in making bicycle tires by the pole process, bicycle tire making machinery comprises building machines for wrapping rubber and fabric around a mandrel or movable endless core and for building up tires on a drum; collapsible and fusible annular cores on which tires are built up; molds in which the built-up tires are vulcanized, both of the single and nest types; press vulcanizers in which the molds are heated and the tires cured under pressure, some of them comprising molds and formers in themselves, and numerous miscellaneous devices.

BICYCLE TIRE BUILDING MACHINES

Forsyth Endless Tire Wrapping Apparatus

In the figure below is shown an end elevation and a side view of Forsyth's apparatus for making endless cycle tires. The drum *A*

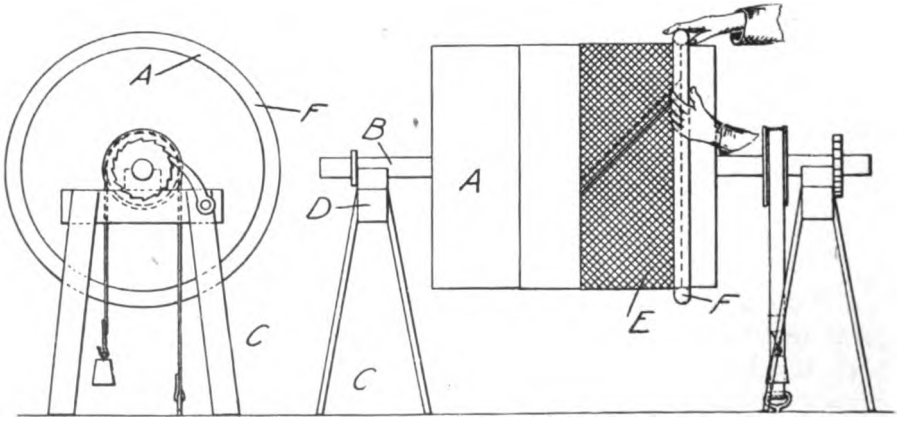

Forsyth Endless Tire Wrapping Apparatus

is rigidly attached to a shaft *B* supported by standards *C* and open boxes *D* in which it revolves. The drum is zinc covered and can be lifted out of one of the bearings so that an endless band *E* of fabric and rubber can be placed over it. A tube *F* of rubber inflated sufficiently

to give it shape, is placed over one end of the band *E*, the outer surface of which is covered with cement. The tube is rolled along the band and the drum turned at the same time, wrapping the fabric and rubber around the tube.

The figure below shows an outside cylinder *A*, which can be expanded and contracted for different sized tires. It is slightly flaring

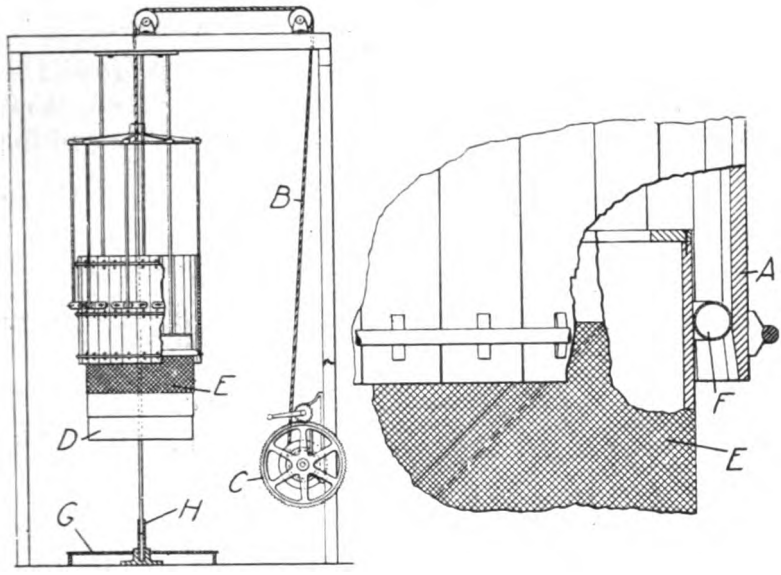

DETAILS OF THE FORSYTH TIRE WRAPPING APPARATUS

at the lower end, and is suspended by a rope *B*, operated by the windlass *C*. The drum *D*, is also adjustable to the diameter of the tire to be made. The fabric band *E* and inflated tube *F* are applied to the drum by hand. The outer cylinder *A* is lowered over *D* so that the flaring opening rolls the inflated tube over the fabric and rubber. The completed tire drops off the drum to the platform *G* and is removed by lifting the sleeve *H* out of its socket.

HUESTIS THREAD LAYING MACHINE

With this machine a straight length of thread or cord carcass for making bicycle tires is formed by winding spirally a warp of rubber impregnated threads upon a revolving mandrel, one layer above the other at right angles to each other and each at an angle of 45 degrees to the mandrel. It consists of a bed supporting the rotating mandrel and

having parallel guides in which slides a carriage mounted upon which are a warp beam and a receptacle for rubber solution. Both the beam and the receptacle are adjustable relatively to the mandrel, and means are provided for sliding the carriage as the mandrel turns and to conduct the warp of threads from the beam through the rubber solution to the mandrel. An adjustable comb mounted upon the carriage varies the width of the warp.

Seiberling Cycle Tire Wrapping Machine

The Seiberling machine for rolling into a tube the several layers of fabric and rubber used in forming pneumatic cycle tires, is shown in end elevation. *A* is a table on which are housings *B*, supporting in

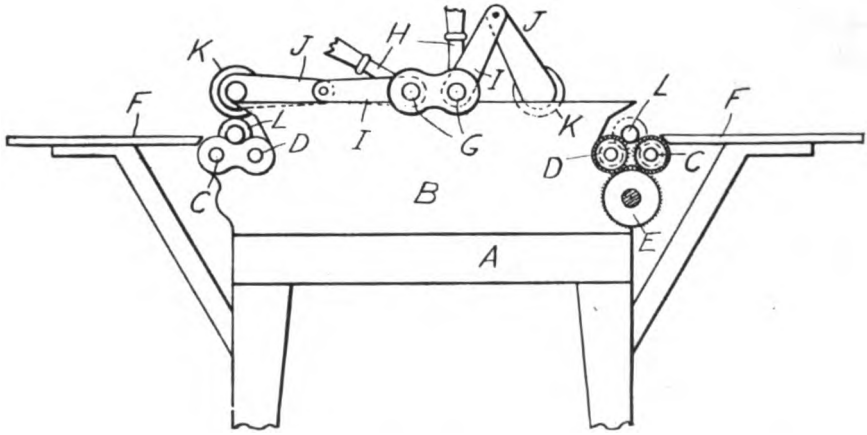

Seiberling Cycle Tire Wrapper

bearings at each side the rollers *C* and *D*. On the ends of these rollers are pinions that mesh in the gear *E* on the driving shaft. Immediately opposite each set is a shelf *F*, which supports the stock used in forming the tube. At the top of the housings *B* are journaled parallel shafts *G*, each having a lever *H* by which it may be rocked. On the ends of these shafts are fixed crank arms *I*, their ends being connected to similar crank-arms, *J* in which are journaled shafts bearing rollers *K*. To operate the machine, a mandrel *L* on which the tire is to be built up, and having the rubber lining already thereon, is laid with its ends in the hollow portions of the housings between the rolls *C* and *D*. A strip of frictioned fabric and a strip of rubber are cut to the proper width and length and the edges are lapped together, forming one combined sheet. This is attached by one edge to the rubber lining on the man-

drel. The rollers are then set in motion and the presser lever *H* presses the roller *K* against the mandrel *L*, which is revolved by friction with the rolls *C* and *D*. This rolls the strip of fabric and rubber upon the lining tube. The tire is then removed by forcing compressed air between it and the mandrel. Its ends are joined and it is vulcanized.

Gray Endless Tire Wrapping Machine

This is a machine for forming a continuous length of tubular material to be afterwards made up into tires. A strip of rubber is first fed on the traveling core by a guide co-operating with a trimming device so that the rubber is made to entirely envelop the core, and over this layer of rubber is wound a layer of thread, the turns of which lie aslant around the core. A second strip of rubber is then fed on over the layer of thread in the same manner as the first, and on this second rubber covering a number of metal or other bands called "separators" are placed at a distance from each other equal to the length of material which is to form a complete tire. A second layer of thread is then wound on aslant, around the core and crossing the threads of the first layer. The material is then removed from the core by cutting it open longitudinally, after which it is cut into lengths as indicated by the separators. The latter can then be removed, their main object being to prevent adherence of the thread to the rubber at these points so that when the cut lengths are curved into circular form, the threads at the meeting ends of each length may be readily joined.

Dessau Cycle Tire Building Machine

For building up the outer covers of double tube bicycle tires, a drum revolvably mounted upon an axle to which it is connected by an arm, and which can be readily collapsed to allow of its diameter being reduced, is provided on its periphery with two lateral grooves corresponding to the position of the wires in the edges of the tire and also preferably, a central ridge corresponding approximately to the curvature of the tread portion of the tire. Each side of the drum is provided with a series of hooks or an annular groove for the reception of a tension band. The fabric which is to form the tire is placed in position around the periphery of the drum, the tension bands being placed on it and employed to assist in smoothing out the fabric and holding it in position while the wires are being placed in the edges and the latter turned over. When the process of building up is completed, the drum is collapsed and the tire removed therefrom.

Another form of collapsible drum has a flat periphery in which are formed grooves for the reception of the wires, but no central ridge.

This drum may be employed to form pockets of fabric containing the retaining wires, the fabric being stretched and smoothed out with the aid of the tension bands and then the edges folded over the wires. After the latter has been put in position, the edges of the fabric meeting about the center of the strip, the latter is cut down the center so as to leave the two pockets complete with the wires therein.

To facilitate the shaping of the tire previous to its completion a third form of collapsible drum is provided with a periphery grooved so that the cross section corresponds to the cross section of the channel or tire receiving face of a wheel rim. The tire carcass previous to the outer rubber covering being applied thereto, is placed on this drum and inflated, when the fabric of which it is formed will be stretched and shaped. While the tire is inflated, the outer rubber cover is applied and solutioned in position along the tread, the tire being then deflated and removed from the drum when the solutioning of the covering can be completed.

In use, all three of these drums are interchangeably and revolvably mounted on a stand one side of which may be collapsed so as to facilitate the removal of the drum therefrom when it is desired to take the tire off this drum.

Smith Cycle Tire Building Machine

This machine consists of a table, journaled under which is a shaft on which, projecting beyond the front of the table, is a removable drum on which the layers of fabric forming the tire are built up. The shaft and drum are revolved by a driven disk splined to and sliding along the shaft in response to adjustment of a shifting arm and handle. The driven disk co-operates with the driving disk, the axes of the two disks being at right angles to each other. Normally the two disks are out of contact, although the driving pulley is continually operated. On pressing down a treadle the driving disk is carried into co-operative relation with the driven disk which is rotated by it. By moving the shifting arm backward or forward by the handle the relative position of the two disks can be adjusted in order to vary the speed of the driven disk and the drum.

On the table is a turntable upon which are mounted the stock laying, tube punching, tube forming and tube rolling devices which are successively brought into use by rotating the turntable, and advancing the devices outward in a slideway over the periphery of the drum. Four spring-bolts fit successively into a socket to hold the turntable stationary.

Five strips of material, viz., an outer rubber cover, a rubber tread, two plies of frictioned fabric and a rubber layer for forming the inner tube are successively wound in superposed order upon the drum, each being fed through the proper channel of the stock layer, which maintains uniform lateral relation of the several strips throughout their length. The stock roller then presses the strips into permanent adherence and the composite strip is punched for insertion of the valve stem. It is then formed into tubular shape by fastening a flexible core of frictioned fabric coated with soap water to prevent sticking, around the middle of the composite strip on the drum. The strip is then folded upon itself and over the core for five or six inches, preferably where the valve stem has been inserted, and one side edge is lapped over the other. The joint thus made is closed permanently by passing a roller over it, whereby the tire is formed into a tube at this point, after which the formation of the tube is practically completed by a tube forming mechanism. This consists of a folder with guides on the turntable, the folder being inserted in the closed portion of the tire and the edges of the composite strip in the guides, whereupon the drum is rotated and one edge is automatically folded over the other, held in place by grooved rollers arranged in co-operating pairs and the joint between the overlapping edges is made permanent by another set of grooved rollers operating with axes at right angles to the guide rollers. A small portion of the tire is left open for removal of the core. The opening is then closed by hand and the completed tire is ready for curing in the usual manner.

Hubbard Cycle Tire Building Apparatus

Hubbard's apparatus for making fabric foundations for tires, and for making complete tire covers of the wired-on or beaded edge type, comprises a former adapted to receive the retaining wires or cores and the webbed fabric, etc., and a pivoted head which carries devices for folding and consolidating the fabric, etc. The former, of less diameter than the tire, has a channeled periphery formed with grooves adapted to receive the retaining wires, which pass over an adjustable roll. The rubbered fabric, which is wider than the finished tire, passes under the wires and is pressed down on the former by a roller. The edges of the fabric are then turned down by fingers and rotating brushes, a firm adhesion being secured by means of a roller. When the operation is complete, the head is lifted clear by means of a lever, and a second strip of fabric is secured by means of a pressure roll. A rubber tread may be similarly applied.

Eccles Side Wire Machine

In the figure is shown a side elevation and an end view of a machine for applying the side wires of a tire clincher. The endless side wires *A* are placed in the machine and supported by three grooved side rollers *B* in the frame *C*, and by pivoted guides *E* and *F*. The strip of fabric *G* is cut to the proper width and length and is fed, together with a canvas lining strip *H*, between the rollers and the edges of the fabric are turned over the wires by guides *I*. The pressure on

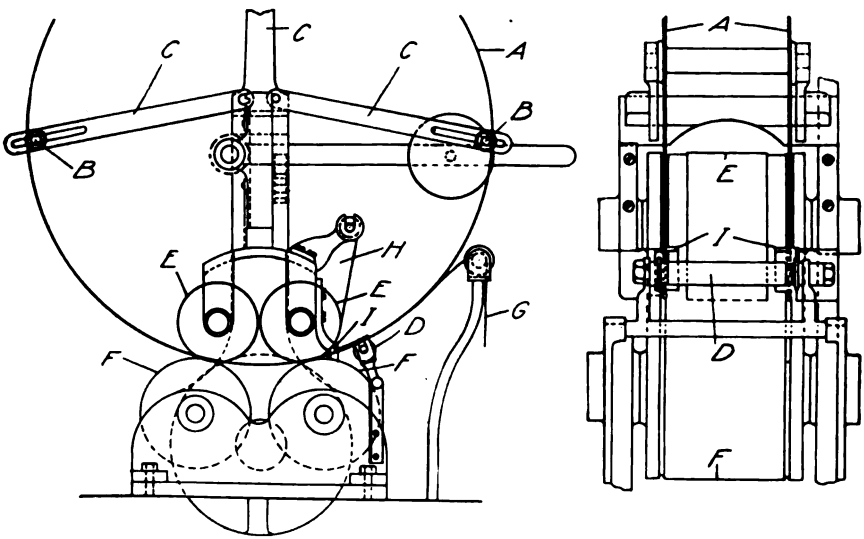

Eccles Side Wire Machine

the upper rollers *E* causes the fabric and the canvas lining strip to adhere. The casing is then ready to be stitched and the rubber tread applied to it.

Nivet-Haegg Bicycle Tire Machine

The casing is made of two superposed strips of bias thread fabric, between which are placed two rows of parallel flax threads at equal distances from the edges for strengthening the base of the tire. This is built up on a collapsible drum, shown in Fig. I, around which the flax threads are first wound to form the reinforcement bands. A strip of fabric is then placed over the bands and the ends joined in the manner shown in Fig. 2. The drum is then collapsed and the strip removed and turned, when it is replaced on the drum. A second

fabric strip is then applied over the first, so that the threads of the former will be at right angles to those of the latter, as may be seen in Fig. 3. The ends are then joined and the strip removed from the drum, after which the edges are turned over and cemented. The

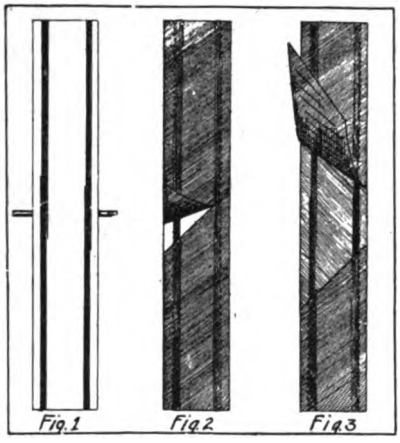

NIVET-HAEGG CASING CONSTRUCTION

strip is finally given tubular form on a mandrel by sewing or cementing the edges together, a suitable opening being left through which the inner tube is inserted.

BOWERMAN BICYCLE TIRE MACHINE

The object of the Bowerman bicycle tire machine for forming pneumatic tires, particularly single tube bicycle tires, is the elimination of sharp bends in the fabric at the point where it passes over the valve cot and the perfection of the adhesion between the head of the valve cot and the material forming the tire. The tire is built upon the drum *A* which has a diameter substantially equal to the inner diameter of the tire to be produced, and having an axial slot *B* adopted to give clearance for the valve cot. The tire forming materials of rubberized fabric and uncured rubber *C*, are laid circumferentially of the drum and folded into tubular form over a spacing strap *D* provided with a handle for convenience.

As the layers are folded, the material is tightly sealed with a hand tool and the strap drawn along. The last few inches of the circumference of the tire is folded without the spacing strap and pressed without backing.

A spheroidal depression is provided in the strap *E*, into which the head of the valve cot and the fabric covering it may sink. This permits any desired amount of pressure being exerted by the hand tool

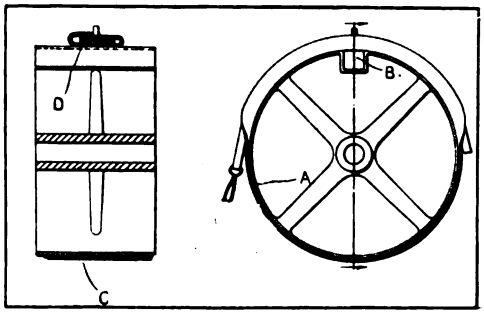

BOWERMAN BICYCLE TIRE MACHINE

around the valve cot without danger of bending the fabric layers and insures more perfect adhesion between valve cot and fabric.

BICYCLE TIRE CORES AND MANDRELS

MORGAN & WRIGHT CORE

As illustrating one of the methods of building up tires and removing them from the core the accompanying figure showing the Morgan & Wright core, may be referred to. The mandrel *A* is formed with a short removable section *B*. This section is held in place by tongue and groove joints. In preparing the tire, a layer of canvas *C* is first

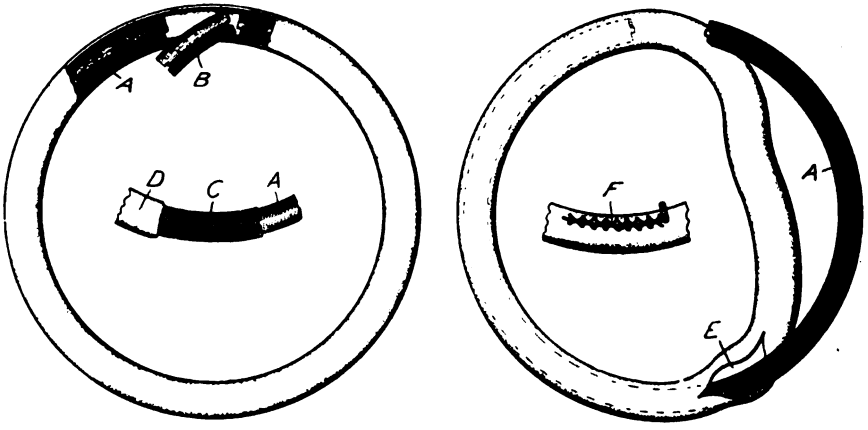

MORGAN & WRIGHT CORE

wrapped around the core and then a covering *D* of rubber is placed over this. The mandrel thus covered is placed in a mold under pressure and vulcanized. This forms an endless, seamless tire, completely sealed up with the core inside. To remove the core, the tire is slit for a short distance, as shown at *E*, on the inside and directly over the removable section *B*. The end of the core is then clamped in a vice and the tire is stripped from it. The slit at *E* is laced together as shown at *F*.

Holmes Mandrel

This is another Morgan & Wright mandrel substantially like the foregoing except for a longer removable section, which is swiveled to the remainder of the annular mandrel at one end and has a dovetailed tongue and groove for connecting the free end of the swiveled section to the remaining portion of the mandrel.

Hubbard Expanding Mandrel

In this device for expanding the mandrel or former used for curing the covers of bicycle tires, the mandrel consists of a split ring, the ends of which are adapted to fit flush together by means of a projection and recess. Lungs formed with holes are secured near the ends of the split ring. When the mandrel is in use, these lugs are placed over pins on a bench device, with the mandrel in a collapsed condition. A tire cover is next placed over the mandrel, which is then expanded by turning it about the pins, from the collapsed to the expanded position. In the case of tight tires, the expansion of the mandrel is assisted by forcing apart the pins by means of a cam operated by a lever, one of the pins being mounted on a slide for this purpose. After the mandrel has been expanded, the mandrel and tire are removed for vulcanization. The tire can then be removed by opening the joint by means of a cam and collapsing the mandrel.

Gleason Fusible Core

Bicycle tires are made seamless by winding or placing the rubber about a solid core fusible at a temperature below that destructive to rubber. The rubber is heated to vulcanize it, and the molten core is removed through an aperture left for that purpose. The core may consist of bismuth 5 parts, tin 3 parts, and lead 2 parts by weight. On a core is wound a strip of rubber, preferably vulcanized; over this, canvas is wound, and then further layers of rubber, preferably uncured, and canvas or other material as required. Before winding on the first layer, a steel tube is placed in position to serve as a valve tube. The

article is placed in molds and vulcanized, and the fused core is then withdrawn through the valve tube by means, for example, of a siphon.

BICYCLE TIRE VULCANIZING MOLDS

Moomy Mold

With this mold tires are made by forming an endless outer tube, of fabric, inserting therein an inner tube with closed ends, lapping past each other, inflating the tubes with gas or liquid under pressure in the inner tube to act as a core and vulcanizing under pressure. The mold has a duct for entering the valve of the tire when in the mold, and to the valve is connected a pipe from the air pressure supply for inflating the tire.

Sherbondy Mold

In Sherbondy's apparatus the walls of the tire are forced against the sides of the mold during vulcanization by the means of compressed air. In the drawings is shown the means for inflating the tire. *A* is the mold in which the semi-circular grooves *B* coincide when two sections are placed together. *C* is the tire in the mold. It is formed with a tubular stem *D*, through which projects a metal tube *E* with an enlarged outer end *F*. Into the upper end of *E* is screwed a valve

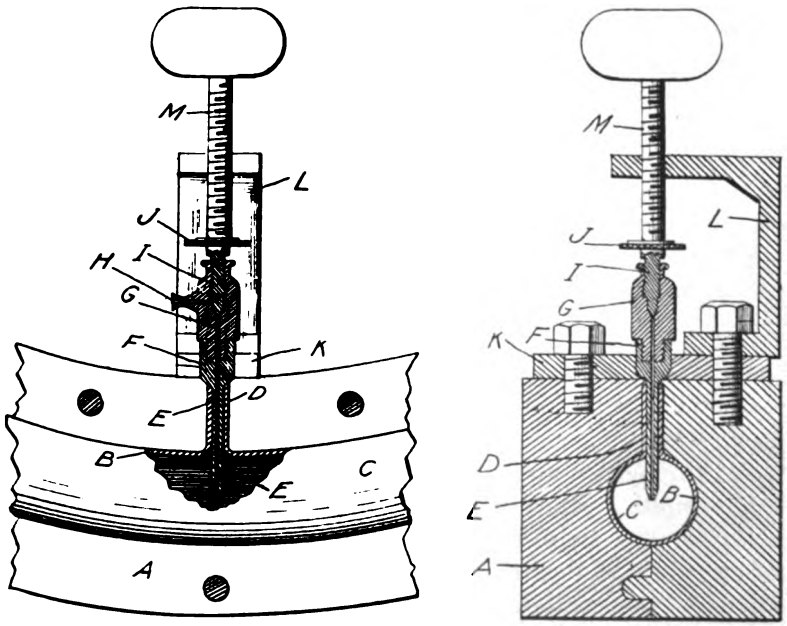

Sherbondy Mold

coupling *G*, formed with an air supply tube *H* which is connected to an air pump. The valve *I* is threaded into the coupling *G* and is provided with a milled nut *J*. Bolted to the plate *K* is a bracket *L*, which carries the clamping screw *M*.

The tire is first inflated slightly and the tube inserted in the stem *D*, which fits it tightly. It is then inflated and placed in the mold, the valve being opened only enough to allow the free passage of air. Then the tire is completely inflated to a pressure of about 90 pounds per square inch. The clamp *M* is screwed down to prevent the escape of air. When vulcanization is complete the valve is opened to allow the air to escape and the tire is removed from the mold.

Cowen Mold

This vulcanizing mold consists of three parts, a flexible outer member and two substantially rigid inner members with means for clamping the two together. The inner members are adapted to retain the outer member and thereby inclose the tube to be vulcanized. Both inner members have substantially the same width and are formed to constitute between them an annular selvage receiving chamber with opposite entrances between the overlying adjacent edges of the two members. The outer member has enlarged selvage edges to enter the opposite entrances of the selvage receiving chamber and be securely held there.

Bert Mold

This is a two-part mold for manufacturing non-puncturable tires. The upper half of the mold is chambered for hot steam, and the tire itself, which is put in the mold in crescent shape, has led through it during vulcanization a stream of liquid which maintains a low temperature. The result is that the tread of the tire is more completely vulcanized than the interior. When the tire is inflated it of course takes a circular form, the inner walls are compressed and tend to close if punctured.

Fawkes Mold

This mold is composed of two members one of which is provided with pins radially disposed and projecting from the inner periphery of the mold into the hollow of the latter. These projections are adapted to form external recesses on the inner periphery of the tire vulcanized in the mold, the two mold members being provided with apertured lugs adapted to receive fastening devices for holding the two parts in operative relation.

NEST MOLDS

Rath Nest Mold

Annular rings provided with grooves which form the molds are fitted together one above another and clamped between two plates. Vulcanization is effected by means of steam which enters and leaves the space enclosed by the rings and top and bottom plates by apertures in the bottom plates. In a modification, each ring is provided with two or more top and bottom grooves.

Heywood Nest Mold

Heywood's vulcanizer is used both as a mold and vulcanizer for tubes and tires. The annular cast iron boxes A are provided on each

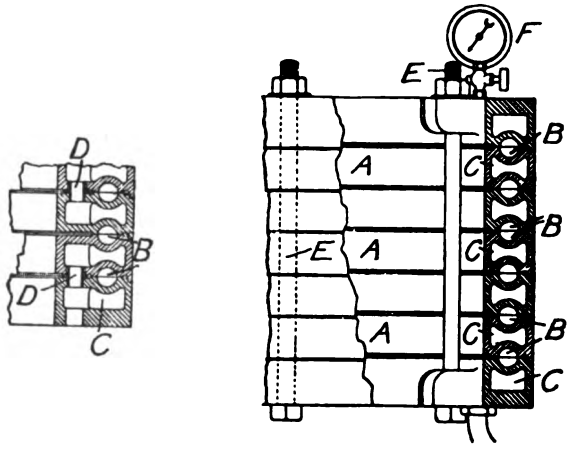

Heywood Nest Mold

face with a groove B, corresponding in shape with the tube or tire to be vulcanized. A number of these boxes are fitted together, as shown, and steam is passed through the annular channels C above and below each mold. These steam channels are connected together by passages D drilled or cast in the projecting lugs of each mold. The molds are held tightly together by large bolts E and at the upper end of the vulcanizer is fitted a steam gage F to record the pressure of steam passing through the channel C.

Waddington Nest Mold

The object of this mold is to allow a free circulation of steam through and around the molds, and at the same time to prevent the access of steam to the surface of the tire or ring.

The annular metal boxes or rings are alike, cored out hollow and have concentric semicular recesses in which tires of different diameters are placed. Vertical openings allow steam to pass through the inlet and thence from the interior of one annular box to another and upward to an outlet at the top. There are corresponding grooves in the upper and lower faces of the metal rings between the steam openings and the grooves of the mold, and also between the steam openings and the exterior of the mold. In these grooves, half in one ring and half in the other, packing rings of rubber or asbestos effectually prevent

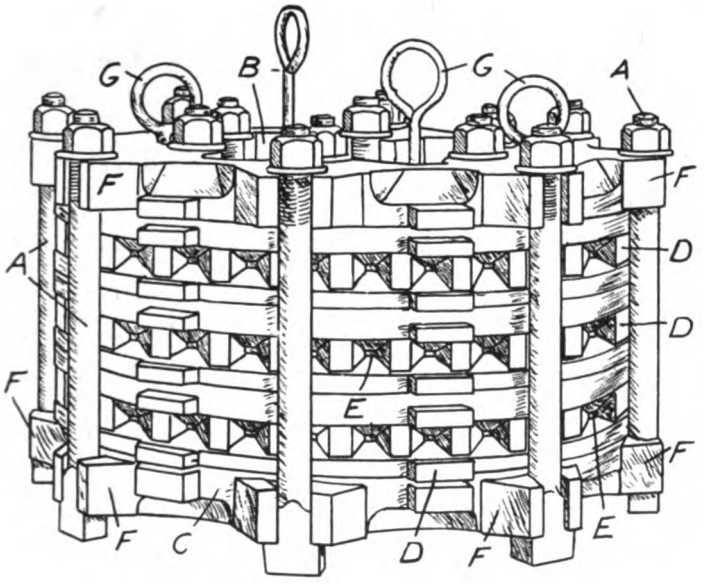

WILLIAMS NEST MOLD

the passage of steam either inwards or outwards between the annular boxes forming the mold. In a modification the lower grooves are dovetailed to retain the packing rings when the annular boxes are separated to remove tires after vulcanization, the projecting ribs bearing against the packing material when the mold is closed.

WILLIAMS NEST MOLD

The Williams nest mold for curing tires consists of four molds bolted together with heavy steel bolts *A*. By the use of longer bolts any number of molds may be clamped together and placed in the steam chamber. When it is desired to cure only one tire at a time,

only the two end sections *B* and *C* are used. To cure two tires, the two sections with one intermediate section *D* are used, and so on. The intermediate sections are made up with a mold cavity cut in each face. Steam ports *E* are provided so that steam circulates freely around the tires. The molds are annular in form and the end sections are provided with lugs *F* on both the inside and outside circumference for clamping the molds together. Eye bolts *G* are threaded into the upper section for raising the nest of molds and conveying it to the vulcanizer by means of a chain suspended from rollers on an overhead track.

Thompson Nest Mold

This nest mold is formed of superimposed hollow rings secured together by catches, fitted with handles, and connected by pipes for the circulation of steam or other heating medium. The tire casings are vulcanized by these heated molds, and the surplus rubber recovered before vulcanization.

BICYCLE TIRE PRESS VULCANIZERS

Doughty Press Former and Vulcanizer

This is a quick-closing, hand-operated press for curing single tube cycle tires and is quite simple in construction. Upon a heavy base plate *A* are mounted four steel columns *B*, threaded at the upper ends to support the upper steam platen *C*. The lower platen *D* slides on the four columns and is raised or lowered by means of a pair of toggle blocks *E* and *F* operated by the hand lever *G*. These blocks are so constructed that when the lever *G* is inserted in the upper block a power-

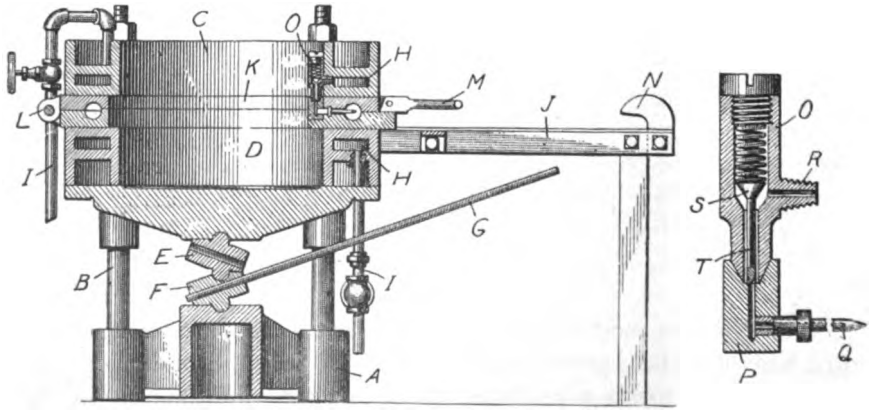

Doughty Press Former and Vulcanizer

ful leverage is exerted to raise the platen *D* and to hold it in position. This platen is lowered by inserting the lever in the lower block *F* as shown in the drawing, and turning the toggle blocks so that their opposite ends meet. Each of the platens is provided with a steam chamber *H* and steam supply pipes *I*. At one side of the press is a track with rollers for the mold *K*. A backstop *N* keeps the mold from running over the ends of the track. The upper and lower sections of the mold are hinged at *L* with a handle *M*. The handle is pivoted to the upper plate of the mold and when the outer end is raised the mold is forced open.

Attached to the inside of the upper steam platen is a spring-controlled valve *O*, through which steam passes from the heating compartment *H* to the interior of the tire. This inflates the tire, pressing it against the walls of the mold and also hastens vulcanizing. The construction of this valve is shown in the detailed drawing on the right. The block *P* is attached to the lower mold section and the needle *Q* is inserted in the valve opening in the tire. The upper part of the steam valve *O* is attached to the platen *C* by means of the threaded nipple *R*. Central passages are provided in all of these parts so that steam will pass into the tire when the valve plunger *S* is raised. When the mold is raised to the upper platen the lower end of the valve case *O* enters the upper end of the block *P*, and raises the valve *S*, thus opening the steam passage into the tire.

Doughty Hydraulic Press Vulcanizer and Mold

With this apparatus single tube tires are vulcanized in a mold within which the tube is inflated by pressure of steam admitted to the interior to heat and vulcanize the lining from the inside, while the mold is also heated simultaneously to vulcanize the outside or rubber cover. The vulcanizing mold consists of two separate sections, each having a chamber for the reception of steam and two grooves, when the sections are brought together, constituting the annular chamber in which the tire is molded and vulcanized. The upper section of the mold is secured immovably from the vulcanizer frame, which consists of a base and vertical rods to which latter the upper section is bolted. The lower section slides upon the rods as guides and may be raised or lowered by a hydraulic ram consisting of a cylinder secured to the lower section, and a piston upon a standard, the operating fluid being admitted to and discharged through a suitable channel.

With this mold is combined an injector pipe, which is adapted to enter the air tube of the tire after the latter has been placed in the

lower annular groove, and which communicates with a suitable steam supply, the steam being admitted after the two sections of the mold have been brought together. A pipe is attached to the steam chamber opposite where the injector pipe is attached to the lower mold section. The former pipe serves to conduct steam from the vulcanizing chamber through the air tube into the tire and is supplied with valves to regulate the pressure within the tire and with a pressure gage.

Steam is admitted to the chamber of the lower mold section through a jointed pipe provided with a cock. The chamber has a pressure gage, and a discharge pipe with a cock. By closing the discharge pipe cock and admitting a limited amount of steam a low pressure and temperature may be obtained. This may be increased by further opening the inlet pipe cock, and a still higher temperature may be effected by opening the discharge pipe cock and allowing the steam to pass rapidly through the chamber.

Doughty Collapsible Hand Press Vulcanizer

This press shapes the tire by means of an expanding core upon which it is then cured. The drawing on the left shows a section through the complete apparatus, while the two figures on the right show the tire core in contracted and expanded positions. The press is of the ordinary type, with a base plate *A* and steel columns support-

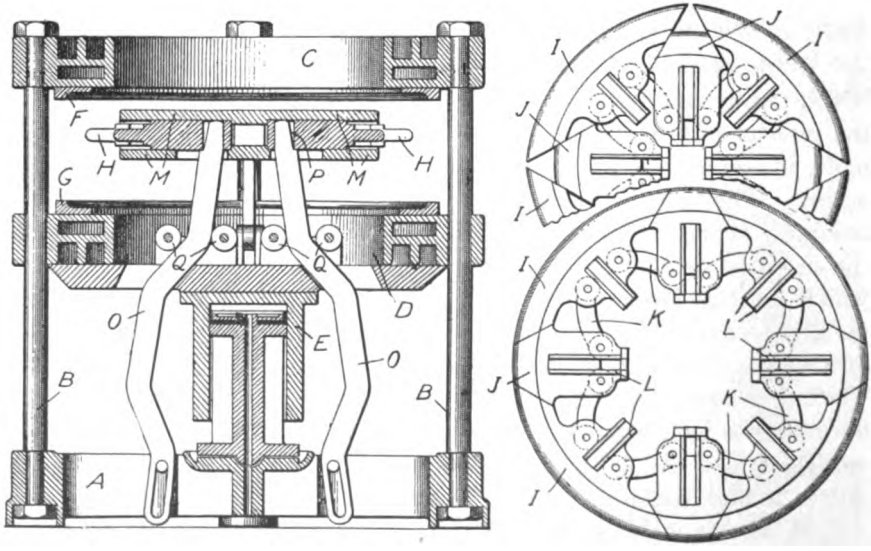

Doughty Collapsible Hand Press Vulcanizer.

ing the upper steam platen *C* and providing guides for the movable lower steam platen *D*. The latter is raised or lowered by means of the hydraulic cylinder *E*. Attached to the upper and lower steam platens are the tire mold sections *F* and *G*, into which the tire is forced by the rim *H* of the core. This is made in four sections *I* and four sections *J*, connected together by links *K*. The sections are provided with ribs *L* on their upper and lower sides, which slide in radial grooves in the plates *M*. The core is expanded and contracted by means of four bent levers *O*, the upper end of which fit in recesses *P* in the inner ends of the sections *J*. When the lower mold section is raised the rollers *Q* act as guides for the bent levers and force the upper ends outward, thus expanding the core and forcing the tire into the mold. When the lower steam platen descends the reverse operations take place and the tire is contracted.

Doughty Expansible Mold and Press Vulcanizer

The mold consists of a fixed upper half and a movable lower half, supported by a frame, which is movable vertically on a fixed piston. The frame carries a rack engaging with toothed segments, pivoted to the base of a circular core, which is provided with expansible parts having racks in gearing with the segments. The base is supported by vertical rods, which slide in fixed blocks, provided with stops for engaging with grooves in the rods. When the stops come against the blocks, the downward motion of the base and core is stopped, and the further downward motion of the frame and rack rotates the toothed segments, thus contracting the expansible parts of the core. Rods with reduced lower ends tend to hold the stops in engagement with the grooves in the rods. A pipe, for supplying steam to the vulcanizing mold, slides in a fixed part. Screws allow adjustment of the expansible parts of the core.

Hardy Press Vulcanizer

The Hardy press vulcanizer is designed for quick molding and curing of cycle tires. The lower half *A* of the mold rests in the bed plate *B* and the upper half is secured by screws *C* to the platen *D*. This platen is attached to the vertical yoke *E* which slides in the guides *F*. On the four standards *G* are mounted bearings *H* which carry the shaft *I*. On this shaft is a large eccentric *J* working against the top and bottom plates *K* and *L* of the yoke *E*. The shaft is provided with a heavy hand lever *M*, and by turning this lever the platen *D* may be quickly raised or lowered. The two parts of the mold are chambered

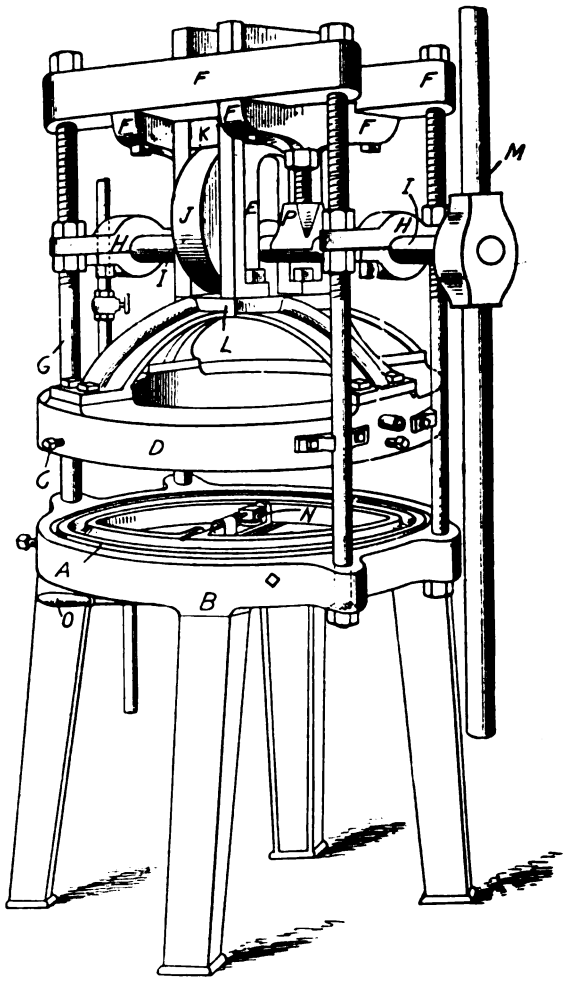

HARDY PRESS VULCANIZER

for steam. By means of a valve *N*, operated by the lever *O*, steam is admitted to the interior of the tube after the mold is closed. Above the shaft *I* are two half-bearings *P*, which prevent bending of the shaft while under pressure. These bearings and also those which support the shaft are adjustable vertically for different sized molds.

DOUGHTY TUBE VULCANIZING PRESS

The drawings show side and end elevations of Doughty's vulcanizing press for curing bicycle tire tubes and also enlarged sections of

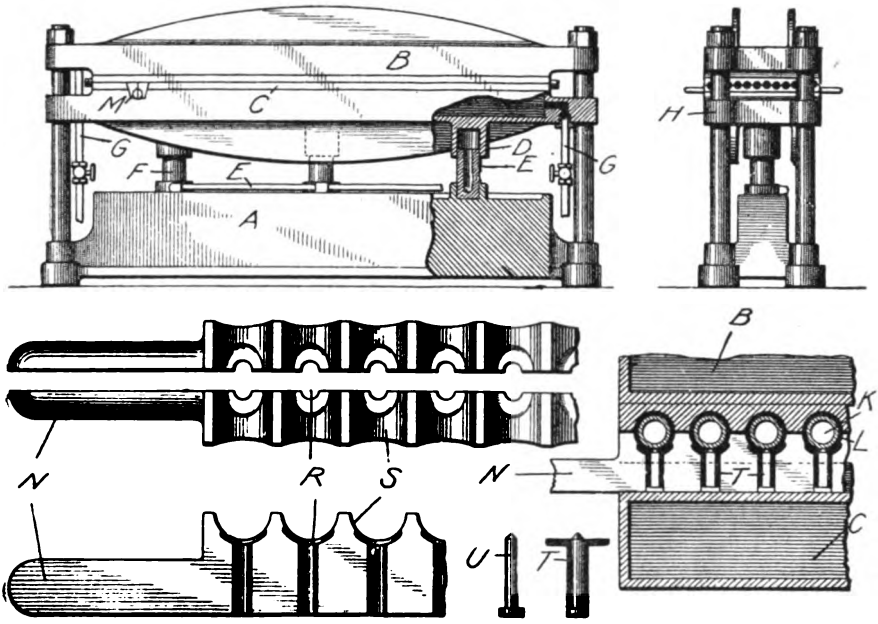

DOUGHTY TUBE VULCANIZING PRESS

the tube mold. The hydraulic press *A* supports and operates the mold, which is made in two sections *B* and *C*, both of these mold sections being cored for steam. The lower section *C* is raised and lowered by three hydraulic cylinders *D*, operated by water pressure admitted through the pipe *E* to the hollow pistons *F*. Unlike most hydraulic presses, the pistons are stationary, while the cylinders move. Pipes *G* convey steam to the upper and lower mold sections, that for the lower section having flexible joints to permit movement when it is raised or lowered. The molds have longitudinal semi-circular channels which register when the sections are brought together, and form tubular vulcanizing chambers. Their ends are contracted to form bearings for supporting the mandrels *K*. In use the mandrels are placed parallel to each other between two sheets of rubber and the whole is carried to the press on two socket bars which hold the mandrels and the rubber sheet securely in place during the transfer.

For attaching the valve tubes, the lower mold section *C* has a transverse recess *M*, which receives the auxiliary mold *N*. This is provided with semi-circular recesses *R* corresponding to the shape of

the valve tubes when the two parts of the mold are brought together. *N* has handles by which it may be lifted in and out of the recess *M*. Its upper face has semi-circular channels *S*, which register with the tube channels of the mold proper. Before placing the mandrels and tubes in the press the valve tubes *T* are slipped upon short mandrels *U* and inserted in the openings *R*. The mold *N* is then placed in the recess *M* and the mandrels and sheets of rubber placed upon the mold section *C* as described above. In this way the flanges of the valve tubes are vulcanized to the main tubes during the cure of the latter. When the mandrels and valve tubes are in place the socket bars are removed and the lower mold section *C'* is raised in contact with the upper section and held until the tubes have been cured. The mandrels with the cured tubes connected by thin films from the overflow are removed from the press, the film severed and the tubes stripped from the mandrels ready for inserting the valve.

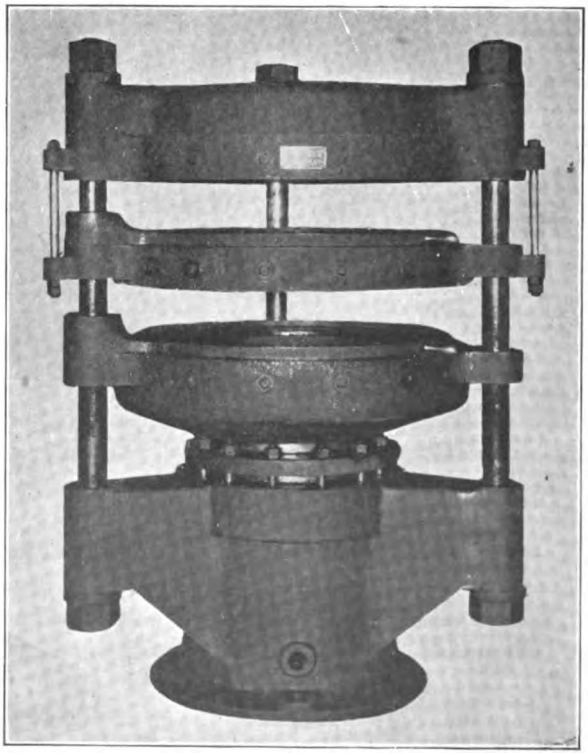

ADAMSON MOLD PRESS VULCANIZER

Adamson Mold Press Vulcanizer

This mold press, operated hydraulically, has a swinging lower mold to facilitate the insertion or removal of the tire.

It may have a number of platens arranged one above the other, to any desired height. The lower platen can be swung out clear of the machine by the handle, as shown, and the tire mold inserted. The platen, and mold are then swung back into alinement with the upper platen, when the ram action is started. The upper platens have an opening to afford inflation of the tires when the press is closed. First, the lower platen will be forced up against the upper platen which, in turn, will force the lower platen of the next tier against its upper platen. The continued application of the ram will force tight joints, when the steam is admitted for curing the tires.

Shaw Press Vulcanizer

The press is made in two sizes for 26 and 28-inch bicycle tires. It is operated by two rams one of which closes the press and at the same time the other automatically expands the collapsible core which is made in eight segments. The loose tread ring for forming the pattern of the tire is not shown in the picture, but is fitted to the columns and is easily changed to enable the same side rings and core to be used with varying tread rings to produce any desired patterns. The time of vulcanization varies from five to seven minutes.

MISCELLANEOUS BICYCLE TIRE MACHINERY

Steel Drums for Treads

In the illustration on page 702 are shown two ring molds or drums used for making bicycle and motorcycle treads. These are also used for making complete bicycle tires of the clincher type. One is plain for plain treads, the other engraved for studded or non-skid treads. The tread is first formed in a profiling calender and placed around the drum in the groove provided for it. The ends are joined and the drum placed in a machine which revolves it, wrapping the face tightly with wet cloth. The tread is then given a semi-cure, stripped off the drum, turned inside out and cemented to the tire carcass.

Bridge Profiling Calender

The Bridge calender is for making plain and non-skid bicycle treads. It has two upright standards which support the roll shafts in bearing boxes, the upper roll being adjustable by means of

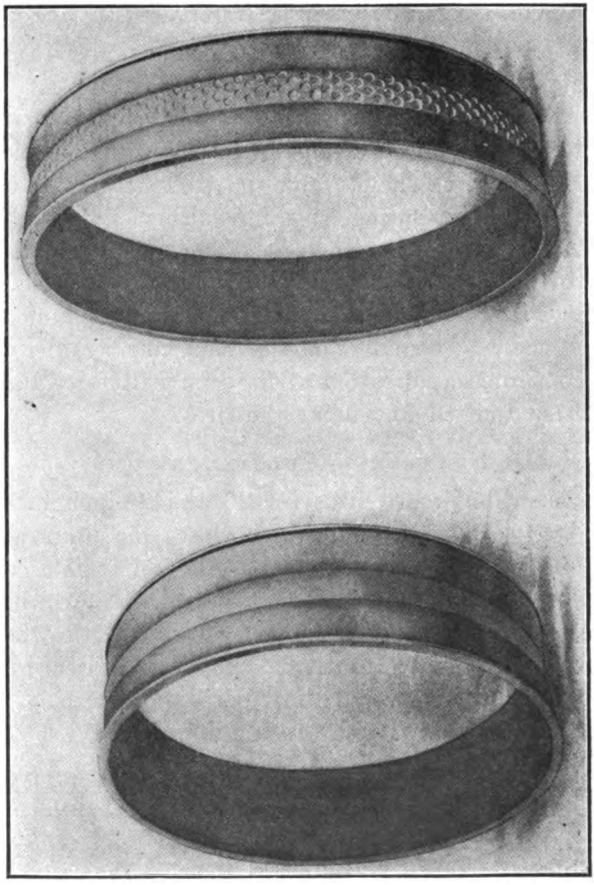

STEEL DRUMS FOR BICYCLE TIRE TREADS

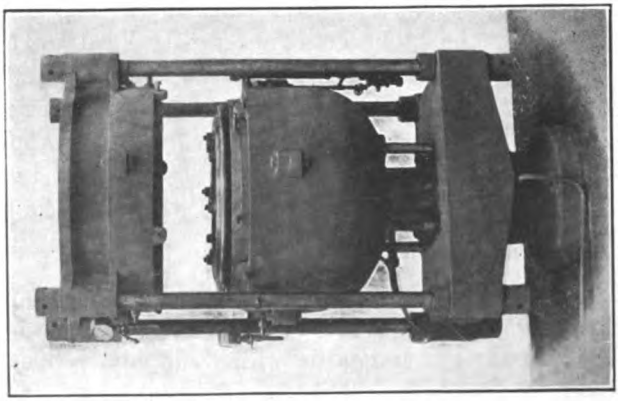

SHAW PRESS VULCANIZER

hand wheels. Power is applied to the lower roll through a belt-driven pulley and a pair of reducing gears. Between the standards is a pair of spur gears by means of which the rolls are driven at even speed. The shafts extend outside the housings and the upper one carries a plain roll while the lower carries a double impression roll which profiles two

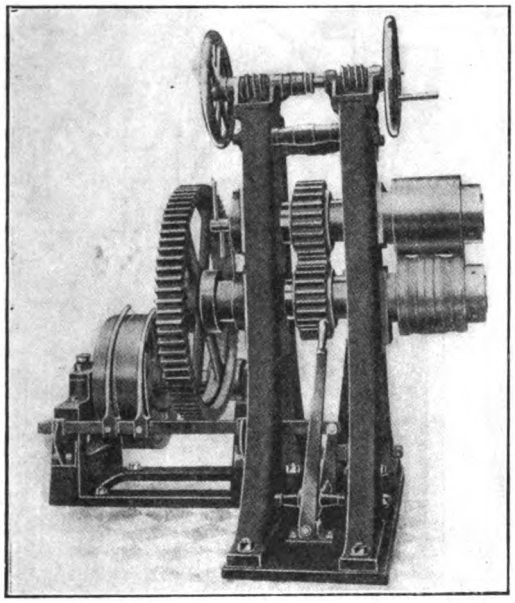

BRIDGE PROFILING CALENDER

strips of tread stock. Both of these rolls can be removed and rolls of a different type and profile substituted.

WRIGHT-PARKER PERFORATING MACHINE

This is a machine for punching holes in tire casings so that the opening can be closed by lacing.

Referring to the drawings, *A* is a standard to which is attached the head *B*, enclosing the punches and their mechanism. The shaft *C* is provided with journal boxes *D*, and carries a heavy flywheel *E* on its outer end. The plunger *G* reciprocates vertically, operating a series of punches *H* for perforating the tire casing. The shaft *C* has an eccentric *I* working in a sliding box *J*. The top of the plunger *G* is curved and provided with a T-groove *K*, in which slide the bases *L* of the punches *H*. Each base with the exception of one carries two punches which have a radial and a lateral movement. One of the end

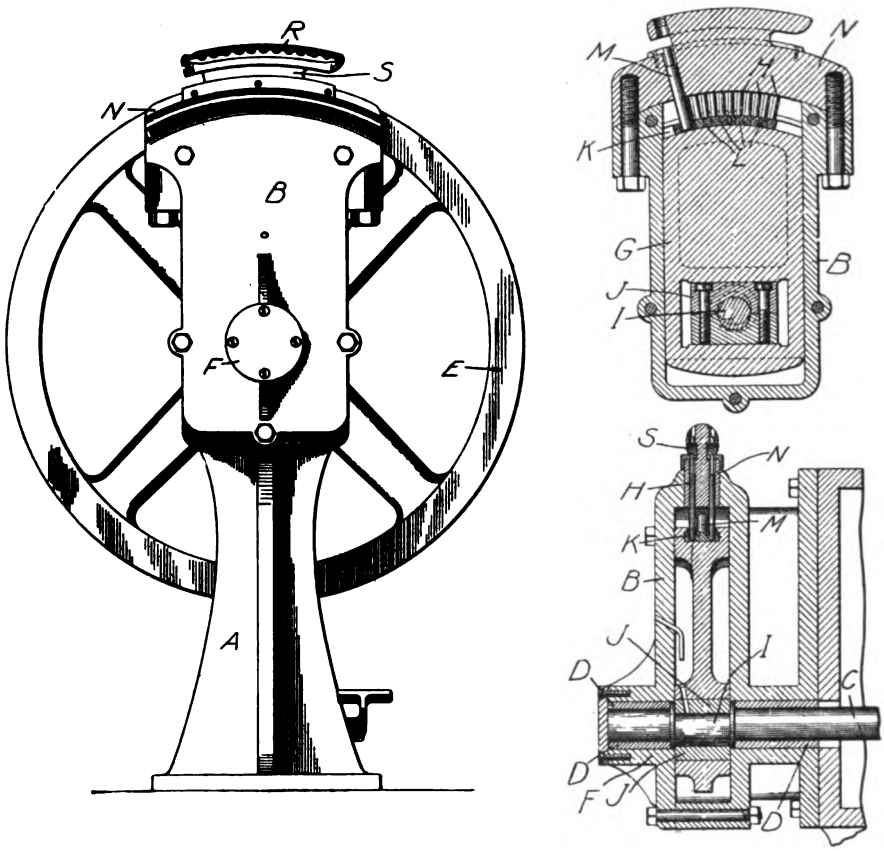

WRIGHT-PARKER PERFORATING MACHINE

blocks carries a third punch *M* for punching the opening for the tire valve. The free ends of the punches work in openings formed in a head block *N*, which is curved to permit them to work on the curved surface presented by the base of the tire case. The face of the head is also curved so that when the base of the tire case is placed upon it, it will not wrinkle. Each punch passes through the material perpendicularly. In operation, the shoe *R* is inserted into the slit in the tire casing. The machine is then set in motion and the shaft in turning raises the plunger, and the punches perforate along the edges of the slit.

ELLINWOOD AIR EXPELLER

Ellinwood's machine is designed for expelling air inclosed between the plies that form the walls of tires or any other tubes of fabric and

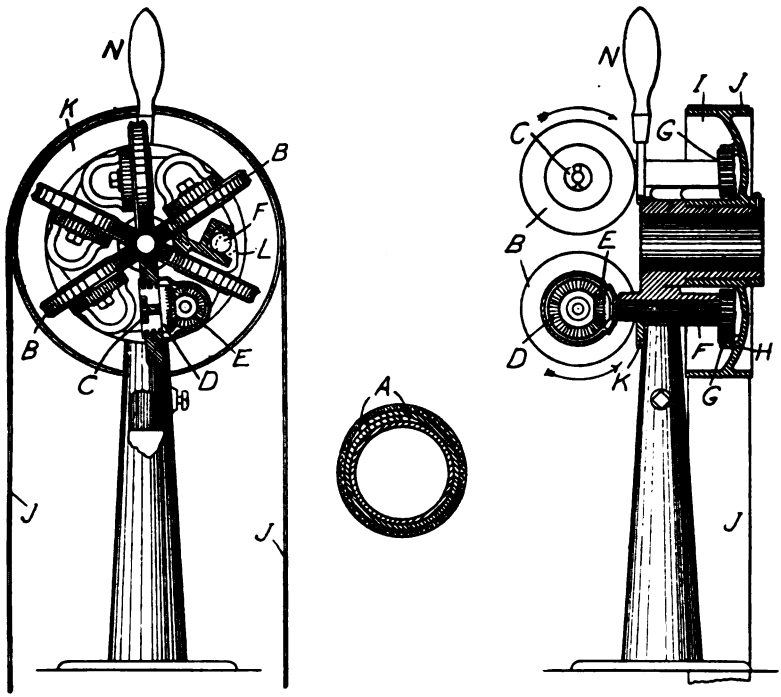

ELLINWOOD AIR EXPELLER

rubber made on straight mandrels. Pocketed air is shown in the section at *A*. In order to squeeze it out the article on its mandrel is run through the opening between the six converging rubber-faced rollers *B*. Each of these carries a wrist pin *C*, bearing a bevel gear *D* which meshes with a bevel pinion *E* on the end of a shaft *F*. The shaft *F* carries at its opposite end a spur pinion *G*. These six pinions *G* are revolved by the internal gear *H* cast on the driving pulley *I*, which is revolved by a belt *J*. Attached to the head of the machine is a ring *K* having six cam curves *L*, which move the shafts *F* radially when the ring *K* is turned by the handle *N*. The rubber-covered rollers are thus brought together and considerable pressure applied. The cams also allow the rubber-faced rollers to be adjusted to accommodate mandrels of varying sizes.

CHAPTER XXXII

INNER TUBES

Theory of the Inner Tube

TO quote an English tire man: "The most vital part of a tire is the inner tube, from which the compressed air is forever struggling to escape." It is unfortunate that the air should be such an unwilling captive and servant, but it is to its unsuccessful efforts to escape, that the pneumatic tire owes its peculiar excellence.

An inner tube will stretch considerably, and if not restrained would balloon and burst, while if it is pinched or nipped under a lug

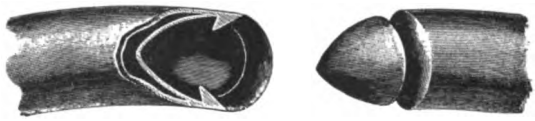

Hannover Gummi-Kamm Inner Tube

or against a flange, the unequal strain will certainly tear it. It will not easily rupture unless unduly strained; but when it is pricked or cut while stretched, the best rubber tears. The tube is in the tire for one very definite purpose—to prevent the air from leaking out. Confining strength, resistance to road wear and to the entry of sharp objects, or

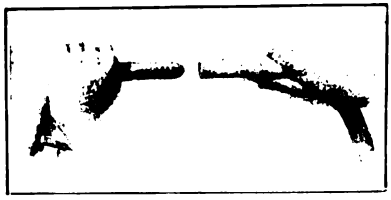

Clifton Inner Tube—English

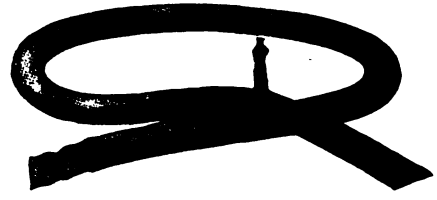

Mechanical Fabric Inner Tube

any other features must be supplied by other means. The air in a motor tire is at a pressure equal to that at which steam engines run, and it will leak through the tube or even blow it to threads if it gets the slightest chance. Motor tubes are made thicker than bicycle tubes, partly to enable them to hold a round shape, for convenience in putting into the tire. The extra thickness does not enable it to hold air better,

and it does not add any material strength. On the other hand, this greater thickness makes the tube proportionately more expensive. The custom of making tubes smaller in diameter than the shoe is a distinct disadvantage from every technical point of view, although a small tube is more easily inserted and is less likely to be pinched than a large tube.

An inner tube is a simple proposition, and the principle is of such ancient application that it could not be patented. It was clearly in Welch's mind in 1890, and was probably used some months earlier in the Dunlop tires. By 1892 inner tubes were in universal use, and beginning to differentiate into the detachable tube, used in double tube tires, and the vulcanized-in type, used in single tube tires.

Butt-Ended Tubes

In 1893 the detachable tubes were cut in two and the ends sealed, this method making for greater convenience in repairing, owing to the

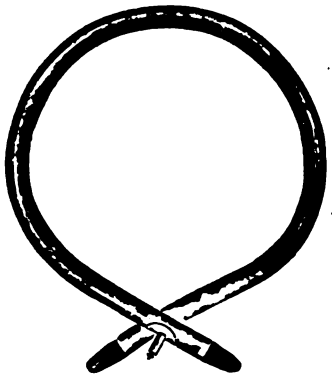

Goodyear Inner Tube

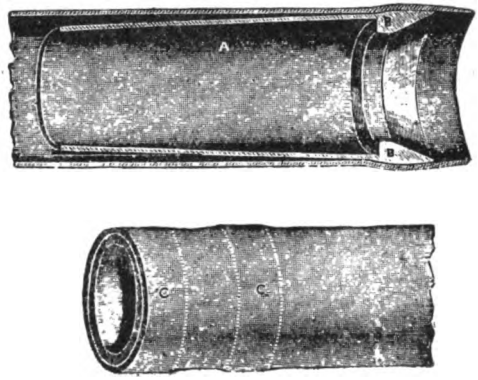

Hermetic Inner Tube

construction of the casings at that time. This double or butt-ended detachable tube originated with Morgan & Wright and had a great popularity, until it was displaced by improvements in the detachability of tire covers, which permitted the use of endless tubes. Then came the popularity of the hose pipe tire, in which the tube became a part of the tire. The motorcycle then recalled attention to butt-ended detachable tubes, since the tube could not be otherwise taken clear of the machine, on account of the practical impossibility of detaching the rear wheel from the frame. The strain on motorcycle and tri-car wheels is much greater than on bicycle wheels, and certain weaknesses developed at the sealed ends, which burst, unless the ends were lapped

just right. Numerous inventions consequently arose, designed to strengthen the ends and yet prevent too great solidity, resulting in "dead ends." It is best to have the ends join after the tube is inserted, so that there are a great number of patented devices for interlocking or joining the ends of inner tubes. Several of these methods are illus-

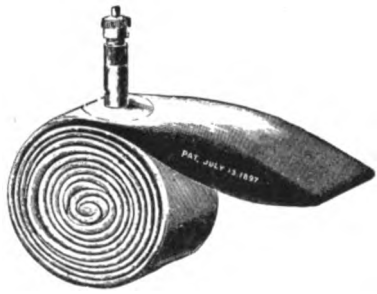

NEWTON INNER TUBE—AMERICAN

trated—some of them held together by hooks and eyes, by buttons, expanding ball and socket joints, and other devices.

A few of these butt-ended tubes have a passage through male and female connecting portions for the free circulation of air within the tube. In the Dunlop butt-ended tube, for example, the two ends to be joined are considerably smaller in diameter than the main tube. The

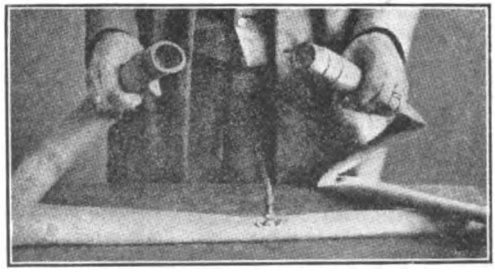

MICHELIN INNER TUBE

female connector is formed with a reduced portion situated a short distance within the tube and the male connector is formed with a correspondingly reduced portion to fit inside. A ridge or collar is also formed on the male member to act as a locking ring retaining it in engaged position. As the end of the male member is slightly larger in diameter than the corresponding part of the female member a tight

joint is ensured between them, its tightness being increased with the degree of inflation of the tube.

"Puncture Proof" Inner Tubes

The elimination of punctures has long been the object of inventors, and hundreds of devices are the result of their efforts to diminish the nuisance of changing tires on the road. While substitutes for air, viscous tire fillers, armored treads and reliners have indicated the general trend of inventive effort, a radical departure from the beaten track has been made in the development of so-called "puncture-proof" inner tubes.

This term is virtually a misnomer, despite the fact that several special tubes resist most ordinary punctures to a marked degree, and many are to a degree self-healing when punctured. Apart from the latter, which will be treated in a separate section of this chapter, most so-called "puncture-proof" tubes are designed to resist piercing by nails and tacks either through reinforcement with materials tougher than rubber, or which remove the inflated air cushion to a sufficient distance from the tire tread to render it practically immune to such punctures. Often they also bear rubber and fabric reinforcements to prevent pinching and rim cuts. There are also sectional inner tubes one or more compartments of which may be punctured without serious deflation of the tire. Some of the ingenious devices intended to insure puncture immunity are obviously logical, while others are sufficiently unusual to deserve the term "freaks." And although they have not supplanted the ordinary inner tube, perhaps in part because of the prices asked, most of them possess merits worthy of attention.

The Victor felt tread inner tube is divided by a rubber partition and the space between the tread surface and the partition is filled with a thick cushion of felt which protects the air inflated section of the tube.

The first of the two following illustrations shows the Kush tube placed in the casing and only sufficiently inflated to hold its natural shape. At the tread there are three longitudinal ribs, very much wider at the top than at their base. When the inner tube is fully inflated it assumes the second shape shown where it will be seen that the ribs overlap and form several chambers in which the air becomes compressed when the tube is inflated. This inner tube weighs about one-third more than the ordinary kind, but it will be possible with it to use a casing about 25 per cent. thinner than the usual casing.

This tube makes the tire much less liable to puncture than the ordinary tube which has the same thickness at all points. By reason

of the compressed air caught between the ribs and the decreased thickness of casing required it is claimed that the tire becomes more resilient. It is further claimed that there is no pinching or friction between the tube and the casing, and much less liability to over-heating;

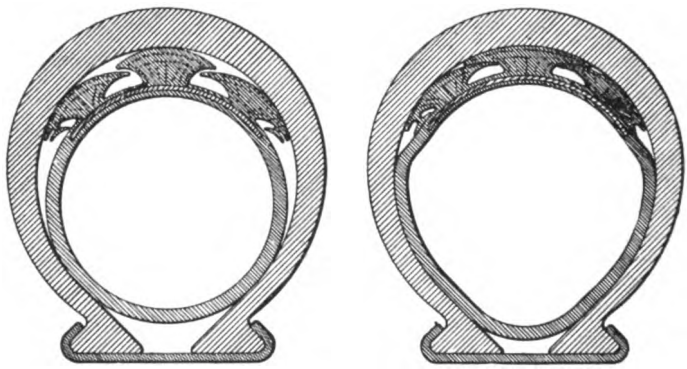

KUSH PUNCTURE PROOF TUBE

that with this tube pneumatic tires can be used on heavy trucks in place of solid tires to great advantage and with much economy.

The Auto-Pneu-Matic inner tube, instead of being one continuous air chamber as is the case with the ordinary inner tube, consists of a

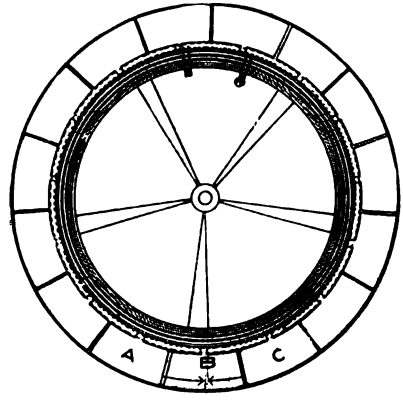

AUTO-PNEU-MATIC TUBE

number of sectional pieces of tube, requiring from 12 to 20, according to the size of the wheel, to constitute a complete tire. These sectional pieces or individual rubber bags are all joined to a small circular metal tube which acts as an air supply conduit.

Each bag or section is screwed to a valve set every 4 inches along the outer circumference of this conduit. By a turn of the control stem, each valve is opened to the main conduit, thereby making the separate sections practically one inner tube. Then the air is pumped through the main valve stem until the required air pressure is obtained, which will be the same in every section. By turning back the control stem, each valve is closed, and each section becomes an independent unit.

In case of a puncture, the 4-inch bag which has been punctured collapses, and each adjoining sack or section will expand, taking the place of the punctured bag. Tests have demonstrated that five or six punctures may be made before it is necessary to stop.

To remove the punctured bag, the air control stem is turned, which opens all the valves and partly deflates the inner tubes. By means of a special tool provided for the purpose, the edge of the shoe immediately over the punctured section is raised, the punctured bag removed and a new one screwed in place.

Multiple Inner Tubes

To obviate the necessity of changing tires on the road following a puncture there are various modifications of the diaphragm tube principle, in which several reserve tubes, each with its separate valve, lie within the principal tube. In case the ordinary tube is punctured the cause is first removed and one of the emergency tubes is then inflated. Some tubes made on this principle have two or three or even four or five reserve tubes in them. They have not wholly come up to expectations, however, because the puncturing object frequently reaches through and jabs holes in the lower part of the tube, especially when the tire runs flat. Such an experience would ruin all the reserve tubes at once. Morgan & Wright's quick-repair device was rather better, since a puncture of the inside flap in the tube did not impair its efficiency. When cement was introduced and the flap pressed up against the puncture, the chances were that the puncture in the tube and in the flap would not exactly coincide.

An early English tube of this sort was the Haworth, which consisted of two tubes arranged concentric to each other and held together at six points by means of rubber elastic bands. There are two valves on opposite sides of the circumference, one for each tube, the valve for the outer tube being fastened to the inner tube in the usual manner and having attached to its base a rubber connecting passage extending through to the outer tube to which it is cemented. Each tube requires to be only half inflated in the first instance, there being less distension

of the rubber and less risk of the tube bursting. Should one of the tubes be punctured the remaining tube can be fully inflated to render the tire serviceable until convenient to make the necessary repair.

The Dittenhoefer two-in-one inner tube is simplicity itself, consisting of two ordinary tubes, instead of one, placed within the shoe, both being connected to the usual tire valve. One only is inflated, and when the inevitable puncture or blow-out occurs, the motorist inflates the reserve tube and continues his trip.

The Twin tube has a resilient partition vulcanized within the tube, dividing the interior into two equal compartments. This partition consists of a continuous strip corresponding to one-half of the inner

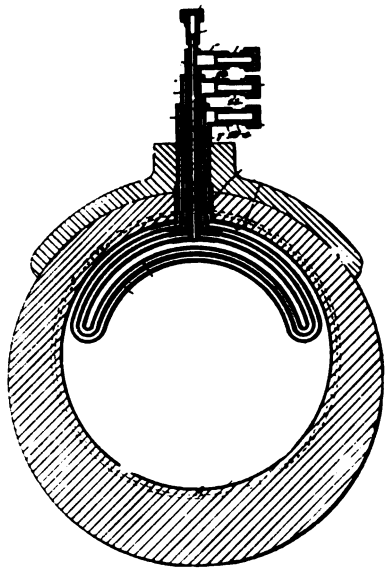

MAGOWAN MULTIPLE INNER TUBE

circumference of the tube. A single two-way valve serves to inflate either compartment separately or both compartments at the same time. In the event of a puncture of one of the compartments, one-half the air remains in the unpunctured side. This is sufficient to carry the vehicle to a convenient stopping place for inflation to the original pressure. Experience shows that compound punctures are exceptionally rare. In such an event, however, the inner partition is vulcanized after slightly enlarging the opening in the outer wall of the tube, and the operation is then completed by vulcanizing the outer incision.

The Raymond inner tube embodies three independent tubes in one. On the exterior it resembles any ordinary inner tube, but by reference to the cross sectional views it will be seen that it differs radically from the usual construction. The three tubes are shown at *A*, *B* and *C*. They may be inflated independently, one at a time, by means of a specially constructed tire valve *D*, which has three separate air passages leading to the three tubes. When the tube is placed in the tire the section *A* is first inflated by turning the valve so that the proper air duct communicates with this section. The compressed air in the tube *A* flattens the walls of the tubes *B* and *C* against the outer walls as shown in Fig. 1, and the tire is run with the one tube inflated until a puncture occurs. Then instead of having to replace the tube, or to repair the puncture, the valve is turned into such a position that either tube *B* or *C* may be inflated. In Fig. 2 the tube *C* is shown inflated so that it entirely fills the internal space of the tube *A*, and at the same

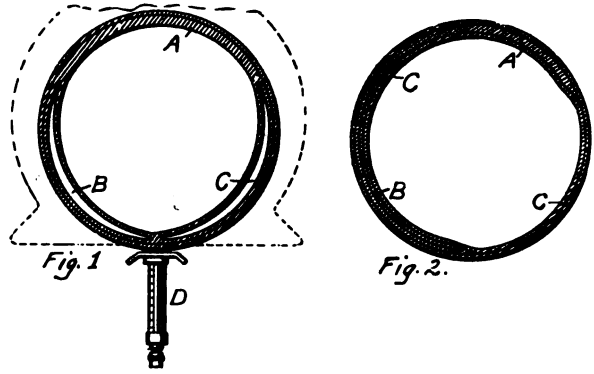

RAYMOND TRIPLE INNER TUBE

time increases the thickness of the tread portion of the tube. When this tube becomes punctured the third tube may be inflated and used until a third puncture occurs.

A similar tube known as the Triplex is so constructed that there is a separate inner wall portion at the top and also at the bottom. The valve stem is so designed that by unscrewing a ferrule and turning the stem, air can be forced in between the outer tread and the first layer. It forces the inner loose section upward next to the rim side of the tube where it is held by the air pressure. If a puncture is sustained, the valve stem is unscrewed and turned to the second position, when the middle section of the tube may be inflated, this time forcing the first inner loose section against the tread portion of the tire. If another

puncture is sustained, the valve is turned to the third position, when inflation forces air between the inner wall of the tube and the second inner loose section, the latter being pressed with the first loose section against the tread surface.

Reinforced Inner Tubes

The ordinary automobile inner tube is virtually an oversize bicycle tube and when expanded under high inflation the strain upon it is very great. To reduce that strain, permit lower inflation with adequate cushioning, reduce the likelihood of punctures, secure greater strength and prevent blowouts, several firms are manufacturing reinforced inner tubes. The methods of reinforcement are numerous and varied.

One of the simplest expedients is to make the tread portion of the tube where the greatest wear comes, several times as thick as the rim portion, thus reducing the expansion of the rubber at that point and increasing the resistance to puncture. Carrying this idea a step farther,

Kokomo Thick Tread Tube

one or two plies of fabric inlay are imbedded in the rubber of the tread portion to keep it from stretching, the only expansion of the tube being where it is protected under the rim. This increases the resistance to puncture by tacks or nails, and if pierced by them the unexpanded rubber closes instantly, dams the hole and keeps the air from escaping. Such a tube is too tough and strong to burst even under casing wear and cuts which would ordinarily cause blow-outs, and is claimed to obviate about 85 per cent. of ordinary tire troubles. As these tubes are made to fit the casing cavity without tread expansion and some of them have its exact cross-sectional shape they are adequately inflated with 15 per cent. less air pressure than the ordinary tube and still provide an easy riding cushion. In fact, the walls of the tube are themselves heavy enough to keep the casing from flattening and breaking. With such tubes the service mileage of weak badly worn casings is considerably increased—at least 25 per cent. is the usual claim.

Another type of reinforced inner tube contains five endless cables imbedded in the thickened tread portion of the tube and extending around its circumference. These cables, the makers assert, make the tube proof against blow-outs by reason of its reinforcement, thereby increasing the tire mileage. The extra heavy tire displayed by this company is shown at *E* in the accompanying illustration, and the reinforcing cables in the tube are indicated at *H*.

The Apollo cord web tube is of seamless, spliceless construction and has in its thickened tread three plies of a cord web fabric that gives and takes with the rubber. A double layer of fabric extends completely around the Searle tube. At the tread portion the tube is folded in on itself, and the annular *V*-shaped groove thus formed is filled in

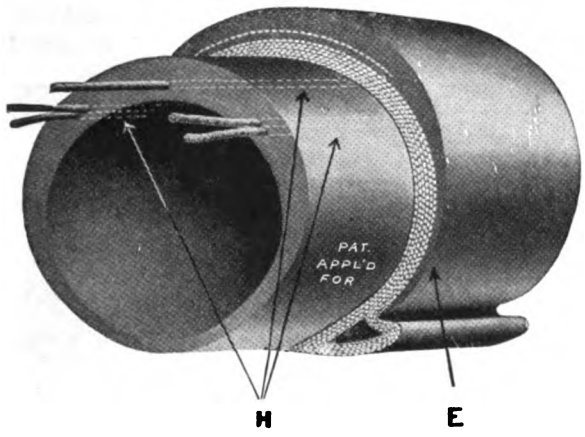

GREENSBURG REINFORCED INNER TUBE

with specially resilient rubber. Protection against bursting of the tube is given by the fabric, while the construction at the tread not only gives protection against punctures, but allows for the expansion that must come when the tube is inflated. Increase of the diameter of the tube is taken care of by drawing the fabric out of the fold or pleat at the tread, against the resistance offered by the filling of rubber.

There are also tubes utilizing the thickened tread and fabric reinforcement which in addition have an insertion of some hard substance along the tread that renders them practically non-puncturable as well as blow-out proof. The Eureka tube has a wedge-shaped section of hard rubber that presses down in a vertical line over the air space, while the Flex-steel tube has three overlapping ribbons of spring steel encased in the rubber between several plies of cotton fabric. These

steel bands are claimed to hold the tube in place, prevent creeping and wrinkling and hold up the tread of the tire so that the car is not riding on the sidewalls of the casing.

Some fabric reinforced inner tubes have no thickened tread portion, and a few have one ply of a specially woven seamless elastic fabric which in one instance imparts to the outside surface a velvet grip that overcomes any creeping against the inner wall of the casing.

The salient feature of the Palmer cord inner tube, for example, is a special loop-locked cord fabric embedded in rubber, and designed to carry a portion of the strain on the casing.

The cord structure is knitted on special machines and formed on curves similar to those of the casing, thus eliminating the usual stretching at the tread and wrinkling at the rim, a difficulty common in ordinary tubes. The air tube proper is rubber riveted through, and

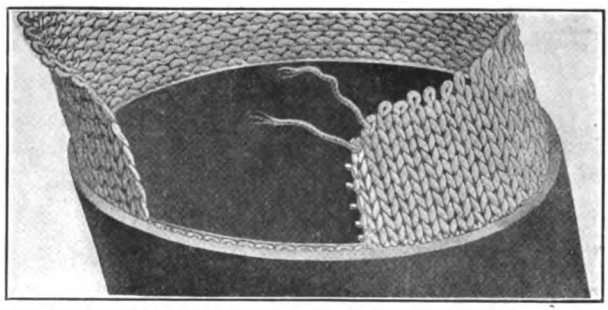

PALMER CORD INNER TUBE

molded over the cords on similar curves, while the lock-loop structure of the fabric allows flexible adjustment to the contour changes of the casing when subjected to varying loads and inequalities of the road.

Another inner tube that strengthens the tire and known as the Armorcord, is of cord embedded in rubber, so arranged that while the outer surface expands, the inner one contracts lengthwise, preventing creeping.

The Helix inner tube has incorporated in the rubber two plies of fabric all around it and a third ply along the side adjacent to the rim and tire beads, the whole being vulcanized in helical corrugations running completely around the tube. These corrugations give to the tube almost the flexibility of pure rubber, permitting it to expand freely in every direction within the casing without strain upon the fabric. When the tube is inflated the corrugations flatten out, thus placing both the fabric and rubber in a condition of circumferential

compression. In this way the entire strength of the fabric is held in reserve ready to prevent a blow-out should the casing become damaged. This tube is said to be ten times stronger than the ordinary all-rubber inner tube.

Under the Poole patent an ordinary inner tube is placed in a flattened condition around an endless circular form and a strip consisting of fabric on the outside and a layer of rubber on the inside is cemented to the tube.

Reinforcement of a somewhat different character is exemplified by the Goodyear heavy tourist, American and Stepney tubes, the rim side of which is about 50 per cent thicker than the balance of the tube. This protects it from rim rust and chafing and reduces pinching to the minimum. The Mohawk inner tube is provided with a ring of rein-

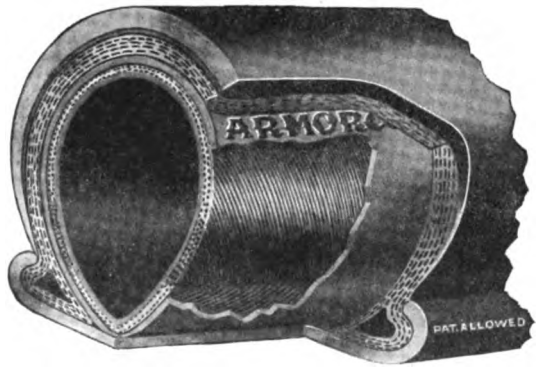

ARMORCORD INNER TUBE

forced fabric on the side that comes in contact with the beads of the tire casing. This does away with the separate tube protector and eliminates tube pinching. A rim reinforcement is also a feature of the Anti-Pinch inner tube.

LEATHER AND GUT INNER TUBES

A few manufacturers have used leather to give added strength to their inner tubes. An ordinary inner tube of rubber has cemented to it an outside covering of strong chrome leather. This makes the tube untearable and proof against injuries caused by catching on the lugs or under the beads. It renders the tube more nearly puncture-proof and decreases the danger of leaks through pinching and other causes. The leather covering is spliced along its inner circumference where it can be easily opened for patching the rubber tube if necessary.

Under the German patent of Wilhelm Pook inner tubes are made of gut and rubber. The interior or exterior of the gut is impregnated with rubber or a similar solution which improves its resiliency as well as increasing its impermeability to air. These inner tubes can be made with or without seams, in one piece or in several parts, according to the size desired, and are intended for automobile, motorcycle and bicycle tires. The tube is provided with a valve through which air or any other material can be forced into it.

Self-Healing Inner Tubes

An important division in the field of patent inner tubes includes those which, while they may be punctured, are not deflated because the puncture is immediately and automatically closed.

Mohawk Tread and Inner Tube

An early form of self-healing tube contemplates the provision within the inner tube of a quantity of viscous material which automatically flows to the point at which air is beginning to escape and hardens in the puncture with sufficient solidity to resist the air pressure and to produce a self-healing effect. For example, the English Sealomatic tube has a plastic inner surface which heals the puncture when the implement which caused the perforation is withdrawn from the tire. Should the cover and the tube actually burst, the tube can be revulcanized in the ordinary way, without being in any way spoiled in the process.

The special healing material used may be placed loosely within the tube or be provided in the form of an inside or intermediate

layer in the structure of the tube. Considerable success has attended the use of a tube with the self-healing compound disposed as an intermediate layer between two layers of rubber.

The Charles E. Miller and Shaw self-healing tubes consist of two concentric tubes of cured rubber, of the same kind as in ordinary tubes, with a space between them which is filled with plastic rubber,

DOW TIRE—PROFILE

which is soft and more or less "tacky." When a puncture occurs the air pressure forces the plastic rubber into the puncture, filling it tightly, and the rolling of the tire over the road increases this effect. As the

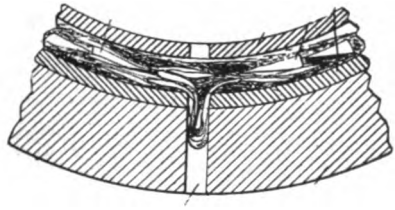

DOW TIRE

layer of plastic rubber is completely enclosed and protected from the air, it will not dry out, but will remain plastic and "tacky" for the entire life of the tube.

The Dow non-deflation tube contained a shallow pocket between two layers of laminated rubber about three-fourths of the way around and directly over the tread that was filled to a depth of about 3-32-inch with a self-sealing mixture of paste, feathers, fabric or other fiber.

Another principle that more recently has been extensively utilized in the design of self-healing inner tubes is the compression of rubber under inflation instead of its expansion as in the ordinary tube.

It has always been known that rubber stretched and rubber compressed behave very differently toward cutting and puncturing. Solid rubber tires and the covers of pneumatic tires are often so made that the surface rubber is under compression, to prevent its cutting. Many have attempted to apply this principle to inner tubes. As early as 1892, Bourdon and Douris, two Frenchmen, got a patent for an inner tube made twice as large in diameter as the cover, so that the tube was wrinkled and folded, even after inflation. The theory was that this loose tube would not puncture but would be simply displaced by the point of a nail or other sharp object. Though these expectations were

SIRDAR INNER TUBE—ENGLISH

too sanguine, the claims were repeated in part by several other inventors. Humphrey, of California, patented a similar tube in 1895; and though the folds were not expected to resist puncture, it was thought that when the tire was again inflated, the chances were that a flap would be brought over the hole and thus shut in the air.

A British firm that utilizes this principle in part makes a tube large enough to fill the whole space within the shoe without stretching To keep it out of the way of the lugs and tools, the tube is vulcanized so that it is normally folded in upon itself, in section like a "U." During inflation this loop rounds out, and is thereby said to slightly compress the rubber. This does not make the tube puncture-proof, though the air escapes very slowly from a hole, the tube being to that extent self-sealing. Some French and American tubes are also infold-

ing, but only for the purpose of holding the tube away from the danger of pinching or being injured by the applying tools. One long-established English tire company makes a specialty of self-sealing air tubes, having the upper part of the tube lined with a layer of soft rubber under compression. The result is that punctures are automatically closed without appreciable loss of air.

The Compression inner tube has walls 3-8 of an inch thick and is of greater cross-sectional diameter than the space it is to occupy in the casing. Consequently when the tube is inflated all the rubber in it is compressed, gripping the puncturing object until withdrawn, when it closes the hole tightly through the natural action of the rubber.

The first illustration shows the tube in its normal position in the casing before inflation, also the cross-sectional shape in which it is molded. When inflated, as shown in the third illustration, the excess diameter and molded construction of the tube, it is claimed, produces radial compression effectively closing an ordinary puncture when

COMPRESSION INNER TUBE

the object is withdrawn. When fully deflated, the tube occupies a folded position forming a thick cushion that permits a car of ordinary weight to run a limited distance on the rim without injury to the casing or tube. It is said that the heavy walls of the tube require less air pressure and prevent the majority of blow-outs.

The Boggs punctureless inner tube is also larger than the bore of the casing and closes punctures by the greater compression along the inner than along the outer wall. It is made of three layers of 3-32-inch gum laid up in core boxes by hand to give it its peculiar shape and then cured in iron molds also of the convoluted form of the tube. The thickness of the tube at the base makes it proof against pinches, the heavy sidewalls make it able to resist stone bruises and also prevent blowing out through holes in the casing, while the weight of the tube insures it against chafing caused by riding the tire with insufficient air pressure.

The March trussed inner tube resembles a large curled caterpillar, the trusses being not unlike accordion pleatings which, under the in-

fluence of inflation, are pressed tightly together and thus present much greater resistence to punctures. If one or more of the folds is punctured by a nail or tack the hole will be immediately closed by edgewise compression. Should a bolt or spike go through the casing the claim is that it would lift one or more of the contiguous folds without rupturing it, owing to the elasticity of the rubber.

The Auto-Seal and Climax Compression tubes are molded seamless with thick walls, and present a series of cup-like depressions in staggered arrangement over the entire surface. By this formation thirty per cent. more material is contained in the tube walls than would be the case were it molded perfectly circular in cross-section. Under inflation this excess material is effectively compressed by flattening outwardly the inwardly curved depressions, thus supplying the anti-leak feature.

The construction of the Pneumatic Cushion inner tube provides transverse and longitudinal bulkheads forming air compartments or

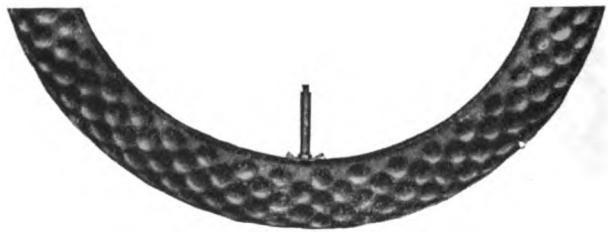

CLIMAX COMPRESSION INNER TUBE

cells, all connected, that act as a cushion if the air in the tube becomes exhausted from any cause, preventing the tire from going flat and damaging it. The depressions on the tread of the tube provide its self-healing feature. When the tube is inflated these depressions are forced against the walls of the casing, causing compression of the rubber and great radial tension at these points, thereby closing the hole after a nail or tack has been withdrawn, or tightly gripping it if the object is allowed to remain in the tube.

Bonner, Henderson and Brown Scientific tubes and Reliance air containers are fabric reinforced inner tubes which utilize the thickened tread principle in such a manner as to render them self-healing by compression when punctured by tacks and nails and so immune from deflation. These tubes are built up on a curved steel mandrel and have an extra thick tread in which a strip of non-stretchable cotton fabric is vulcanized close to the inner surface. After vulcanization the

tube is stripped from the mandrel, turned inside out and its ends are joined. The larger circumference thus becomes the inner circumference, consequently compressing the rubber always on the inside. The more the tube is inflated the more the rubber is compressed on the inside, the fabric preventing the stretching of the rubber on the outside.

BROWN SCIENTIFIC TUBE

This inside compression is so great that the tube is self-closing when punctured. The Vail-Osgood is a tube of this type without the fabric reinforcement.

The Shaw is a molded endless inner tube secure against loss of air when punctured by compression imparted to the entire tube by reason of the scientific principle involved in its formation and inflation.

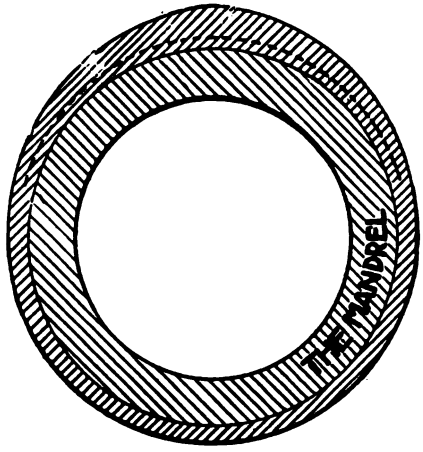

RELIANCE AIR CONTAINER

Under the Blower patent an annular tube is formed with a thickened tread portion molded in a depressed position so as to cause transverse compression of the inner surface on inflation within the casing. There is also a strip of plastic material covering the inner surface of the tread portion.

Self-Inflating Inner Tubes

Several patents have been taken out for inner tubes equipped with devices for keeping them automatically inflated to the proper pressure. Among them is the Rawdon patent.

Positioned within an inner tube of common construction, is a thick elastic plug or partition with a crescent-shaped cavity *A*, provided with tapering ends *B* and *C*. The former communicates with the interior of the tube, and a rubber flap-valve *D* prevents air passing from the tube into the cavity, while *C* communicates with an outside air-duct, the egress of the air being prevented by a suitable valve *E*.

When the tube is placed in the casing and the wheel on which it is mounted revolves, the air is expelled from the cavity into the tube when that portion of the tire containing the elastic partition is in contact with the road. When pressure is removed by the revolution of

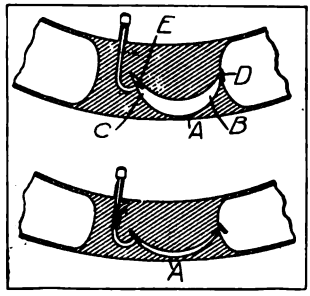

Rawdon Self-Inflating Tube

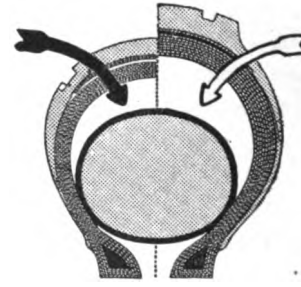

Horse-Shoe Re-Cord Tube

the wheel the valve *D* closes and the valve *E* opens, allowing air to pass into the cavity *A*. This pumping action is repeated as the wheel revolves and inflates the tire. When the proper pressure is attained, the air pressure in the tube forces the end walls of the elastic partition together, thus closing the cavity and both valves until the pressure is reduced, when the pumping action of the cavity is automatically resumed.

Inner Tubes For Cord Tires

In order to use inside a cord tire the ordinary inner tube which was designed to fit a fabric tire, it must be inflated far beyond what was intended to be its normal point of stretching. This tends to weaken the wall, both because of overstretching and of increased friction.

The accompanying diagram in cross-section illustrates the additional amount of space to be filled by the inner tube in a cord tire, as

compared with that within a fabric tire. The black arrow indicates the cross-section of a five-inch fabric tire and the white arrow the cross-section of a cord tire.

The Horse-Shoe re-cord inner tube has been designed purposely to meet these conditions. Its wall is thicker than that of the ordinary inner tube, because it is composed of nine plies of high-grade laminated rubber instead of the more usual six. Its name is intended to emphasize its greater ability to meet the required conditions.

MANUFACTURE OF INNER TUBES

The basic processes for preparing rubber before vulcanization have already been described, and they are practically the same for the manufacture of inner tubes as for any other articles made of rubber. Special compounds are employed, however.

Strength and elasticity are the chief qualities essential to a good inner tube, and that they are being secured through proper compounding is shown by the fact that inner tubes have been used by motorists as emergency tow ropes and by manufacturers as spectacular tests to lift automobiles. In one instance of the latter sort a crated five-passenger touring car, a total weight of 2,990 pounds, was lifted from the ground, suspended in air, and lowered again, this entire weight being held by a 37 by 5 inner tube taken from stock. The report is that, "at the conclusion of the test, the tube resumed its normal shape and was critically examined by the committee, who certified in a sworn affidavit, that the tube was in perfect condition and ready for service."

Tests in the factory on a tension machine, while not so spectacular, indicated an even greater strength, the machine registering 3,100 pounds to the square inch.

Inner Tube Compounds

Inner tube compounds are in general of two classes, the so-called pure gum and the compounded. An example of the former is the gray sulphur cured tube.

	Parts
Fine Pará or plantation rubber	94
Sulphur	6
	100

A good example of a fine red tube is:

Fine Pará or first latex rubber	37.5
Plantation smoked sheet rubber	37.5
Red sulphuret of antimony	21.0
Heavy calcined magnesia	4.0
	100.0

Another excellent red inner tube compound is as follows:

	Parts
Fine Pará or plantation rubber	75.0
Golden antimony	20.0
Zinc oxide	4.0
Calcined magnesia	1.0
	100.0

Valve tabs are made of the same or a similar stock to that of which the tube is made. A useful compound is

	Parts
Fine Pará or plantation rubber	48
Litharge	48
Sulphur	4
	100

There are, of course, basic compounds and are varied greatly according to requirements. Instead of fine Pará alone other rubbers are blended giving excellent results. High grade reclaim is also used in connection with fine Pará and excellent tubes produced.

The popular red inner tube necessarily contains a smaller percentago of rubber to admit the anitomy pigment which not only gives the desired color but functions as well as the means of introducing the sulphur for vulcanization, which it contains in colloidal form, a condition precedent to its ready and complete union with the sulphur in vulcanization. The small amount of heavy calcined magnesia assists in accelerating the cure and imparts to the gum a snappiness or nerve. Such compounded red tubes show excellent endurance and strength. The experience of many leading them to prefer antimony red tubes to pure rubber gray ones.

Of course all red inner tubes do not necessarily contain antimony sulphide, the color being produced by red oxide of iron. In general, other compounded tubes are compounded on a basis of cost rather than of quality. Heavily compounded inner tubes made for light cycle tires often contain 50 per cent. of rubber in the proportion of one part of fine Pará to two, say of Congo sort, filling out the balance of the plastic requirement with rubber substitute or reclaimed rubber.

In this line of compounding, organic accelerators are also used in the same manner as in the production of tire carcasses.

Types of Inner Tubes

Inner tubes for pneumatic tires divide themselves into three principal classes according to the methods used in their manufacture. They are tubing machine tubes, seamed tubes and rolled tubes.

Tubing Machine Tubes

The simplest way to make inner tubes is to force the warm and plastic rubber dough through the circular die of a tubing machine just as small rubber hose and lead pipe is "spewed," the size of the opening in the die controlling both the thickness and diameter of the tube. The tube is then cut to proper length, drawn on to a tubular metal mandrel, cloth wrapped and vulcanized. After the wrappings are removed, the tube is turned inside out, a valve base and valve are applied, the ends

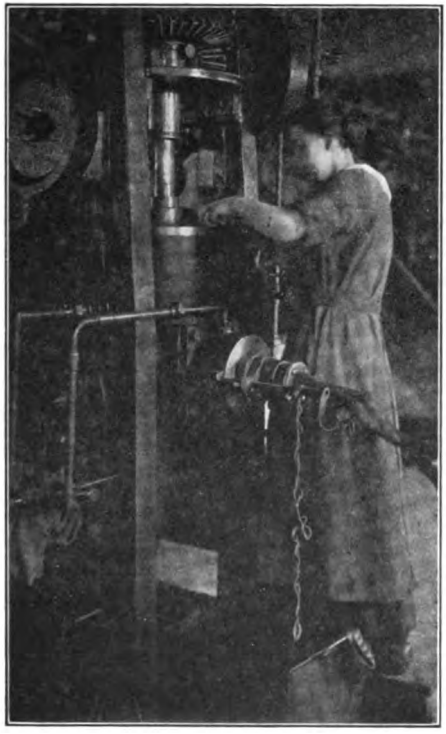

Operating a Tubing Machine

are skived, buffed, cemented and spliced, and upon testing and inspection the tube is ready for the market.

Under the Savage patent the stock is forced over a mandrel to which graphite has been applied in order to prevent sticking and to facilitate the subsequent removal of the tube from the mandrel. The tube is then vulcanized, and when reversed it presents a smooth, durable outer surface that minimizes friction damage within the casing.

Seamed or Laminated Tubes

The rubber stock for making seamed tubes is prepared by plying up or laminating it on a calender into sheets sometimes as long as fifty yards and from 1-16 to 3-16-inch in thickness. These sheets are then cut lengthwise into strips just wide enough to make a tube of the desired cross-sectional diameter when folded over and cemented together. The edges are cut at an angle to form a bevel which makes a good lap seam. The seaming is done both by hand and by machinery. If hand seamed, the stock is first cut to the right tube length; if machine seamed the stock is folded and seamed in a continuous length and then cut to tube length. Vulcanizing, valving and splicing are the same as for tube machined tubes. Throughout the work numerous ingenious machines and devices described in the following chapter are used.

In one of the leading American factories the rubber stock for making seamed tubes is automatically cut to the proper width and rolled up on a drum. The drum then goes to the tube-making machine where

Building Inner Tubes

the flat rubber strip is automatically unwound, its edges cemented, folded over, joined together and the tube cut to the right length. During this process the tube travels over 200 feet on a belt conveyor. From the tube making machine the tube is put on a hollow iron mandrel, cured and finished as already described.

Two important claims are made for the laminated inner tube. Where several layers of rubber are plied together any holes or blemishes in one layer are covered by firm rubber in the adjoining plies and the danger of leakage is thus reduced to the minimum. It is this principle which has been so successfully utilized in balloon construction, owing to the fact that gas is more elusive than air and harder to hold

within rubber. By plying the stock together with the grain of the several layers running in different directions, the tube is toughened and tearing lessened when a blowout occurs.

Rolled Tubes

Rolled tubes are made from very thin sheet rubber by rolling it round and round a tubular metal mandrel of proper size until the required number of layers have been rolled on to give the tube the proper thickness. Each successive layer is made fast to the one preceding by carefully going over it with a hand roller so that all seams, blisters and possible points of leakage are avoided. There are also machines for rolling these tubes. The building mandrel is also used for vulcanizing, after which valving and splicing are the same as for tube machines and seamed tubes.

Under the Marks patent a layer of slowly vulcanizing rubber compound is placed about the mandrel, cloth wrapped and partially vulcanized. Upon this first layer are added one or more layers of rubber

Wrapping Inner Tubes Before Vulcanizing

so compounded as to vulcanize in the time necessary to complete the cure of the first layer. The tube thus formed is then removed from the mandrel and turned inside out, the ends of the tube are then approximated and the tube is placed in a mold and the vulcanization completed.

Methods of Vulcanizing

In order to shape the tube while vulcanizing it, either a straight pole of metal tubing or glass, or else a curved mandrel of proper size is used. When straight mandrels are used, such as rolled tubes are built up on, seamed and tube machined tubes are drawn over them with the aid of a jet of compressed air. A thin piece of wet cloth is rolled

around the tube followed by cross wrapping either by hand or machine with a narrow strip of wet duck over its entire length. Rolled tubes already on the mandrel are cloth wrapped in the same manner. The mandrels are then stacked in racks on roller conveyors and run into horizontal vulcanizers capable of curing about 150 tubes at a time where they are subjected to heat for two hours or more until cured.

When a curved or ring mandrel is used the tube machined or seamed tube is drawn over the mandrel in the same way and cross wrapped only. The advantage of the curved mandrel is that it produces

"VALVING" INNER TUBES

an inner tube that is not simply a length of straight tubing with its ends joined, and either too long on its inner circumference or too short on its outer circumference, but a tube formed to the exact circular shape of the inside of the casing into which its fits perfectly. Such a tube when in service is neither stretched on the outer side nor compressed into creases on the rim side. This avoids wrinkles and pinches in fitting, wear in thin spots and breaks where creased or folded under the pressure of inflation and use. A ring cured tube can always be distinguished from a pole cured tube by the fact that when deflated it hangs in a decided curve rather than flat.

After vulcanization the wrappings are removed either by hand or machine and the tube is stripped from the mandrel with the aid of compressed air. The tube is turned inside out so that the smooth side in contact with the mandrel during vulcanization appears outside and the rough side showing the marks of the cross wrapping is inside. A hole is then pinched in the tube for application of the valve.

Valving Tubes

All inner tubes have a reinforcing patch or valve base to which the metal valve is fastened. This consists of a rubber oval with one or more smaller ovals of fabric plied up on it. The valve base may be applied either before or after vulcanizing the tube. If applied before, it becomes an integral part of the tube. If applied after, a

Women Testing Inner Tubes

valve base is used which has previously been vulcanized and one side buffed and cemented. The surface of the tube surrounding the valve hole to the size and shape of the valve base is also buffed and cemented. When the cement is dry an acid solution is applied to the cemented surface and the patch held in place under pressure while the cold cure is effected. Heat, with the proper cement, may be used instead, or a self-curing cement may be employed. The metal valve is then inserted through the hole and fastened in place by screwing down the lock nut.

Splicing

The ends of the tube are now skived or buffed down to a feather edge, cemented and spliced together by placing one open end within the other, making a lapped seam around the tube 2 1-2 to 4 inches long. An

acid cure cement is generally used, although heat may be used instead of acid, or a combination of both. The splicing is done by turning back one end over a small split metal sleeve and doubling the other end back over a larger sleeve. The two cuffs thus formed are buffed and cemented with several coats of acid cure cement. The smaller sleeve is then inserted in the larger one, the sleeves are removed and the splice "welded" in a leak-proof connection by compressed air.

Testing and Inspection

Each completed tube is inflated to high pressure and tested in a vat of water to discover any leaks in the tube, valve or around the valve

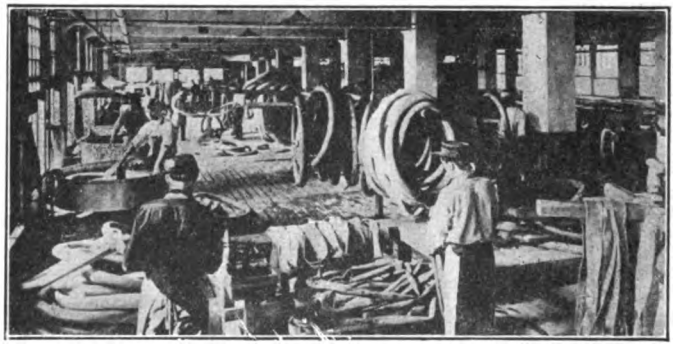

Final Inspection of Inner Tubes

base. It is then inspected for external blemishes and the perfect tubes packed in boxes ready for the trade.

Women in Inner Tube Making

The general call to the colors during the world war took a large percentage of skilled men from rubber factories throughout the world, and in the manufacture of inner tubes many parts of the work formerly done by men were successfully taken up by women who, in many instances, still continue in it. Their tasks in this department included operating tubing machines and the details of making up, such as jointing, lapping, blowing off and on, valve fitting, also inspection, testing and packing.

Variations in Inner Tube Sizes

Although it would be natural to suppose that all inner tubes of the same branded size would be the same length and cross sectional diameter, such is not the case. Of twelve leading makes carefully

measured no two are alike in diameter, the difference between the smallest and the largest being some 15 per cent. Much has been accomplished toward standardization in this respect, however, by government requirements during the war.

United States Government Specifications

Standard practice in the manufacture of inner tubes is indicated by the latest specifications issued by the War Department, which follow.

Pneumatic Inner Tubes (Gray)—General

(a) This specification covers requirements for pneumatic inner tubes of the endless type, except motorcycle tubes, which shall be butt-end or endless, as ordered, of the following sizes:

	inches
GS 1040	20x1½
GS 1041	28x1⅝
GS 1042	28x3
GS 1043	29x3½
GS 1044	30x3½
GS 1045	31x4
GS 1046	33x4
GS 1047	35x5
GS 1048	36x6
GS 1049	38x7
GS 1050	40x8

(b) All tubes manufactured to this specification shall be of the endless type, except motorcycle tubes which shall be butt-end or endless as ordered.

(c) All tubes shall be free from defects and guaranteed as to material and workmanship.

Construction

(a) Gages: Tubes shall conform to the following table:

Size	Medium Pole Size Inches	Medium Thickness Inch	Medium Finished Length Inches
28x1½	1	0.048	77
28x1⅝	1	.048	77
28x3	1⅛	.072	77
29x3½	2⅛	.090	78
30x3½	2⅛	.090	81
31x4	2¼	.095	82
33x4	2¼	.110	89
33x5	3	.135	92
36x6	3½	.180	92
38x7	4¼	.210	94
40x8	5	.250	96

(b) If tube is mold cured, measurements must be equivalent to above as determined by volume, and if larger size poles are used, volume of rubber shall be at least equal to above measurements.

(c) The splice shall be as strong as the rest of the tube under the inflation test.

(d) Each tube shall be properly fitted with one complete Schrader valve or its approved equal, and not leak or bear out under ordinary usage, as follows:

Size	Schrader's No. Or Approved Equal
28x1½	1022
28x1⅝	1022
28x3	1936
29x3½	1936
30x3½	725
31x4	725
33x4	725
35x5	792
36x6	2033
38x7	2033
40x8	2033

Each valve shall be fitted with lock nut, valve cap, and dust cap, with exception for sizes 28 by 3, 29 by 3 1-2, 36 by 6 and over. Spreaders shall be furnished for all sizes up to and including 25 by 5.

Marking, Wrapping and Packing

(a) Tubes shall be plainly marked with the manufacturer's name and size of tube, in both inch and the metric equivalent in accordance with S. A. E. standards.

(b) Wrapping and packing shall conform to requirements accompanying requests for bids.

Material

(a) Compound. Tubes shall be made from and have the characteristics of a compound containing a minimum of 93 per cent. by volume of the best quality new wild or plantation rubber. Sulphur content shall not exceed 7 per cent. by weight of new rubber used.

(b) The organic acetone extract of the cured rubber compound must not exceed 5 1-2 per cent. of the weight of new rubber used.

(c) Compound shall be free from ingredients known to the trade as oil substitute and/or reclaimed rubber.

Tests and Inspection

(a) Chemical and physical tests shall be made from each lot of one thousand tubes or less in order to secure deliveries of uniform

quality, and in accordance with the requirements of these specifications. These tests and analyses shall be made in accordance with the procedure followed by the Bureau of Standards, Washington, D. C. The average results of four test pieces cut longitudinally from the tube shall show an ultimate elongation of not less than 750 per cent. (1 to 8 1-2 inches) when stretched at the rate of 20 inches per minute. The thickness of test pieces shall be the full thickness of the tube, and the central portion of the test pieces shall be 1-4 inch wide over gage length of one inch, the ends being gradually enlarged to a width of approximately one inch to provide a satisfactory gripping surface. The permanent set determined by the average of four tests with pieces as above, shall not exceed 10 per cent. after an elongation of 500 per cent. (1 to 6 inches) for 10 minutes followed by a rest of 10 minutes. All tests shall be made at a temperature between 65 and 90 degrees F.

(b) Each tube shall be tested for leaks by inflating with air and immersing in water.

(c) The Government reserves the right to make any inspection, test or analysis necessary to insure the product meeting all requirements of the specifications.

(d) Each lot of 1,000 tubes or less shall be tested.

CHAPTER XXXIII

MACHINERY FOR MAKING INNER TUBES

THE production of inner tubes by whatever method employed has been greatly facilitated by numerous labor saving machines and devices. There are tubing machines specially designed for inner tube manufacture; rubber strip cutters for seamed tube stock; tube forming and rolling machines; poles and mandrels for building up and vulcanizing; pneumatic devices for inserting and removing mandrels and reversing tubes; wrapping and unwrapping machines for tubes cured in open steam; horizontal vulcanizers for the open cure; vulcanizing shells, molds and presses for special types of tubes; beveling and skiving machines to prepare the ends for joining; splicing mandrels and vulcanizers for making the joint; and several devices of a miscellaneous character.

Tubing Machines for Inner Tubes

Many inner tubes are run out by an ordinary tubing machine such as is employed in the manufacture of tubing, garden hose, and solid tires. Such a machine consists of a horizontal steam-jacketed cylinder in which revolves a powerful worm or Archimedean screw. At one end of the cylinder is an opening, into which the rubber is fed, and at the other end is a die through which the screw forces the plastic rubber.

Standard Tubing Machines

A tubing machine of standard type may be described as follows:

The horizontal cylinder is solidly attached to a cast iron stand or pedestal. This pedestal is hollow with a door for entrance to the interior, which is provided with shelves for the tools used for adjusting purposes. There are also trays on each side of the pedestal for holding wrenches, etc. The cylinder has an opening near the rear end for feeding in the rubber compound. The inside of the cylinder is smooth finished and is usually lined with a bushing which can be replaced when worn. The cylinder is also constructed with a chamber for circulation of steam and water for controlling the temperature of the rubber compound. The steam and water valves and openings are at the top of the cylinder. At the rear end of the cylinder is a solidly

fastened thrust bearing arranged especially to stand the heavy end thrust of the stock worm or screw.

The stock worm is a spirally grooved arbor working inside the cylinder which kneads the rubber compound and forces it toward the forward end of the cylinder. The arbor projects through the thrust bearing and extends beyond the machine to carry the driving gear. At the front end of the cylinder is attached the stock head, arranged to hold the removable die which forms the outside of the tube and also the guide for forming the inside of the tube. This stock head is also chambered for steam and water circulation for controlling the temperature. The machine can be driven direct from a motor or by means of a countershaft overhead. The countershaft drive is the usual method. There is also attached to the frame of the machine an adjustable bracket, which carries on a roller the driving end of a delivery apron. This apron carries the tube away from the machine as it comes from the stock head. It is driven by a pulley arrangement and belt from the lower countershaft.

These machines are also built with soapstone arrangement consisting of a cylinder to hold powdered soapstone with inlet and outlet for an air pipe, which carries the powder up through the machine head and to the inside of the forming tube. The dies and guides for forming the tubing are easily removable and can be changed in a few minutes from one side to another.

The tubing machine effects a saving in time and labor, as compared with other methods of forming the tubular section, and it is asserted that the resulting tubes have no "grain" and when punctured do not split.

Royle Tubing Machine

This typical American type of tubing machine for making automobile inner tubes is equipped with individual motor drive, heating and cooling compartments, water-cooled stock screw, soapstoning head and tank, and adjustable take-off mechanism. The head and cylinder are similar to those parts of any standard tubing machine and are jacketed for circulation of either steam or cooling water. The stock screw is also water-cooled. It is not a screw of constant pitch, but large at the rear where it receives the compound, becoming smaller as it approaches the delivery end. This thoroughly compresses the stock as it passes through the cylinder and squeezes out the air bubbles. A marine type thrust bearing provides ample bearing surface to absorb all thrust. The machine is driven by an individual electric

motor through a pinion driving a spur gear journaled in the iron pedestal base. A pinion on this shaft revolves a large gear keyed to the worm shaft, the driving gear being enclosed by a guard to protect the operator.

To avoid stretching or distorting the soft easily injured tubing before vulcanization, it is delivered as it issues from the die upon a horizontal endless carrying belt of muslin with the edges hemmed which runs over a pulley directly in front of and slightly below the

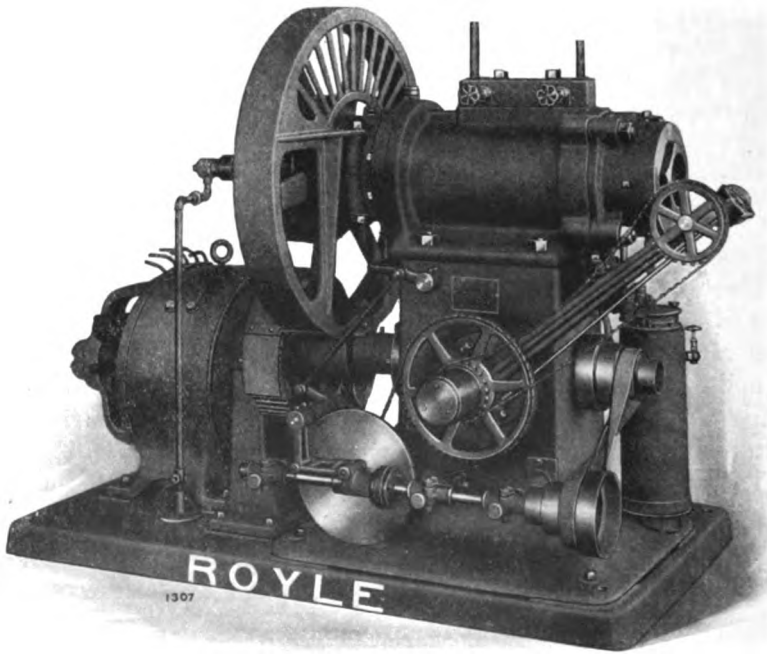

ROYLE TUBING MACHINE

die. The pulley is provided with a speed regulating mechanism controlled by a hand lever. Power for driving the apron is taken directly from the driving shaft extending through the pedestal base. The belt is made to travel at precisely the same speed that the tube issues from the die, and carries the tube along the top of a table where it is cut into lengths for succeeding operations.

To prevent the tube from collapsing and the inner walls from adhering to each other, a soapstoning head is used which enables powdered soapstone to be forced into the tube by compressed air. The

soapstone is placed in a tank which has an air inlet and a tube for conveying the soapstone through an opening in the under wall of the tubing machine head to a channel around the core bridge. The tank is only partly filled with soapstone, leaving a generous air space. As the soapstone mixes with the air it is carried to the core within the head and blown into the tube as it is formed.

The head contains three fixtures, a core-bridge, core and die. The core bridge resembles a five-spoked pulley, is channeled around its outer circumference and has holes through its spokes for the flow of powdered soapstone from the opening in the head casting to the hollowed out interior of the core. Its spokes are thin and so shaped as to offer minimum resistance to the flow of compound between them.

The core is long so that the compound has ample time to become welded together after having passed between the spokes of the core bridge, and is bored out lengthwise so that the powdered soapstone received from the core bridge at its rear end is delivered at the front between the walls of the newly formed tubing.

The die conforms to the proportions of the core and is adjustable with respect to it by means of four screws, thereby maintaining uniform thickness of wall around the circumference of the tube as it is formed. It can be equipped with an electric heater which will apply any required degree of heat evenly around the forward circumference of the die where otherwise there is sometimes difficulty in maintaining a properly plastic condition of the stock.

Dunlop-Macbeth Inner Tube Machine

This is a tubing machine for "spewing" inner tube stock having a thickened base portion to prevent the inner circumferential part of the finished tube from being pinched between the beaded edges of the casing and the rim. Inner tubes having a uniform thickness throughout are often made with an ordinary tubing machine by forcing the rubber through a die on to a conveyor or take-up band which is moved at a speed equal to the speed of delivery of the tube through the die. When a tube with a thickened base is made in this manner the thickened base is delivered from the die more quickly than the inner part, with the result that the tube becomes crimped at its thickened base. With this machine the die is so formed as to impart to the thinner part of the tube a thickness slightly in excess of what is required in the finished tube and the conveyor band is driven at such a speed as to stretch the thickened base of the tube so as to prevent crimping.

Rubber Strip Cutters

For cutting the compounded and sheeted rubber stock into strips of proper length and width for making inner tubes a variety of rubber strip cutters have supplanted hand cutting in large factories. Some of these cutters also skive the strips.

Quinn Inner Tube Strip Cutter

The machine shown is adapted for cutting a number of rubber strips at a single operation, and for making the cuts either square or diagonal to the table. The mechanism is supported on a zinc covered table *A*, one end of which is shown. The carriages *B* are mounted on wheels *C*, which travel on tracks *D*, at each side of the table. Cross pieces *E* and *F* connect the carriages, the rear piece *F* supporting a supplementary shaft *G* and arms *H*, upon which circular cutting knives *I* are mounted. Springs *J* bear upon the arms *H* and press the cutters through the rubber sheet *K*. The carriage is moved across the table by means of a pulley *L*, rope drive *M* and pulleys *N*. The clutches *P* and *Q* grip the rope and give the required motion to the carriage. The table may be operated in either direction, according to which clutch is engaged with the rope. The drawing shows the

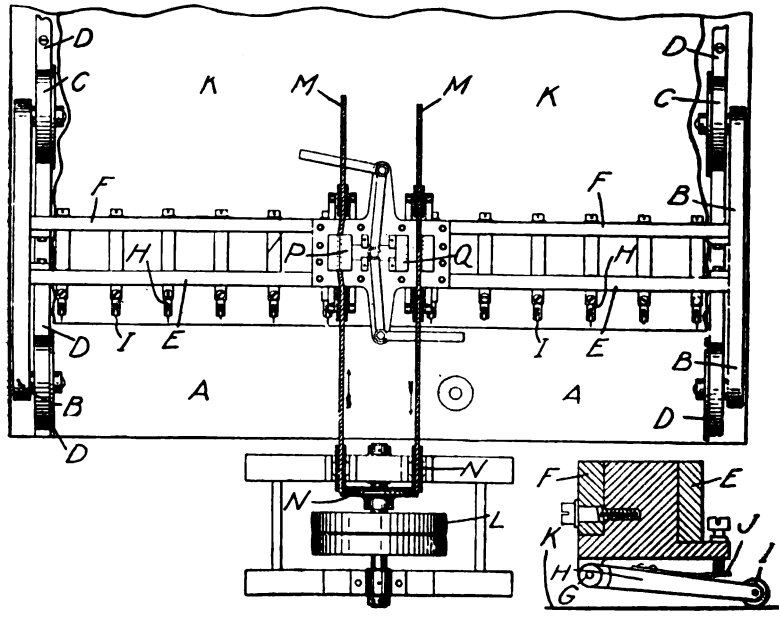

Quinn Inner Tube Strip Cutter

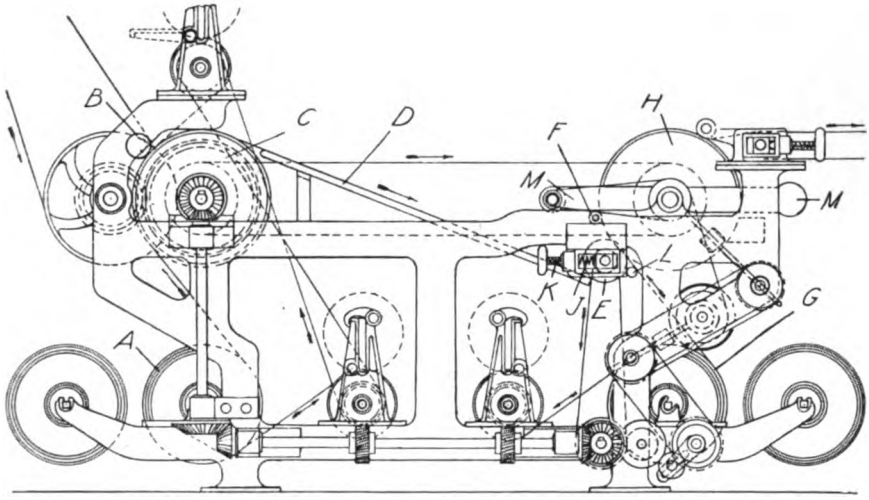

PFISTER-ADDYMAN STRIP CUTTER

clutch *P* engaged to move the cutters from the position shown across the rubber sheet to the opposite end.

PFISTER-ADDYMAN STRIP CUTTER

This is a machine for cutting strips of rubber for the inner tubes of cycle tires, and also for joining together strips for the outer covers. The apparatus may also be used for joining rubber coated canvas strips for making hose. In making cycle tires a sheet of rubber from the drum *A* is cut into strips by circular knives *B* acting against the drum *C*. The strips continue over drum *C* and down an inclined table *D* and are pressed by the roller *E* on to other strips cut by wheels *F* from a second sheet of rubber, which passes from drum *G* to the drum *H*. The uniting of the strips is effected by pressure of the rollers *E* against the drum *H*, the roller *E* being forced against the rubber by the spring *J*, which is adjusted by the screw *K*. A steam pipe *L* is used to supply heat when necessary. The joined strips are cut into uniform lengths by a cutting apparatus on the arms *M*, controlled by the revolutions of the drum *H*.

NALL-TYLER STRIP CUTTER AND SKIVER

Where the edges of rubber strips for inner tubes are skived by hand great skill is required in order to make the bevel uniform and give it the proper angle to form the best joint. A new machine for

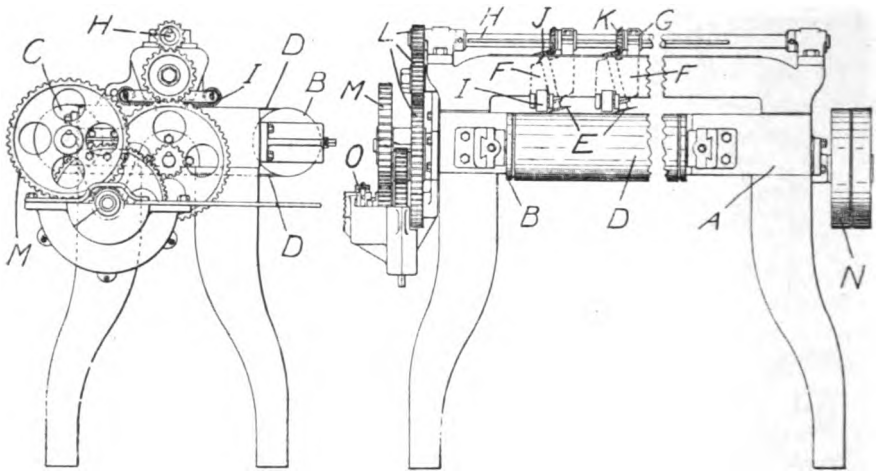

NALL-TYLER STRIP CUTTER AND SKIVER

doing this work, automatically cutting and beveling several strips at one operation, is illustrated herewith in end and front elevations.

Over a table *A* having a roller *B* located at the front and another roller *C* at the rear, passes an endless belt *D* for supporting and conveying the strip of rubber under the rotating circular cutters *E*. Each of these cutters is mounted on the lower end of a spindle in the carriage *F*, the upper end of which forms a bearing for a sleeve *G* on the splined shaft *H*.

The lower end of each carriage has a curved presser foot *I* set close to the edge of the cutter. These sleeves and carriages may be moved along the shaft and set to cut strips of any width. The cutter spindles carry bevel gears *J*, which are rotated by bevel gears *K* on the sleeves *G*. The shaft *H* is rotated by gears *L*, and the endless belt *D* is operated by a gear *M* on the shaft of the rear roller *C*. The machine is driven from the belt pulley *N* and is controlled by a clutch *O*.

The sheet of rubber is fed over the belt *D* and is held down on it by the pressure feet *I*. The cutters *E* rotate at high speed and cut the sheet into strips of the proper width and with a bevel of uniform angle. While only two cutters are shown, others may be added, according to the width of the belt *D*, and the number of strips to be cut.

CAMERON SLITTING AND REWINDING MACHINE

Cameron's machine will slit and rewind any web of rubber, coated or uncoated fabric or paper into strips of any desired number and

width. The slitting wheels, which cleave by pressure rather than cut through the material by reason of a keen cutting edge, are circular score-cutting disks having a V-shaped edge, blunt and mounted on a ball bearing center, spring pressed against a highly polished steel cylinder of intense hardness. Very little attention is required to keep the score cutters in good working order.

The material to be slit threads from the mill roll around one or more of the idler or guide rolls under the machine then over the score

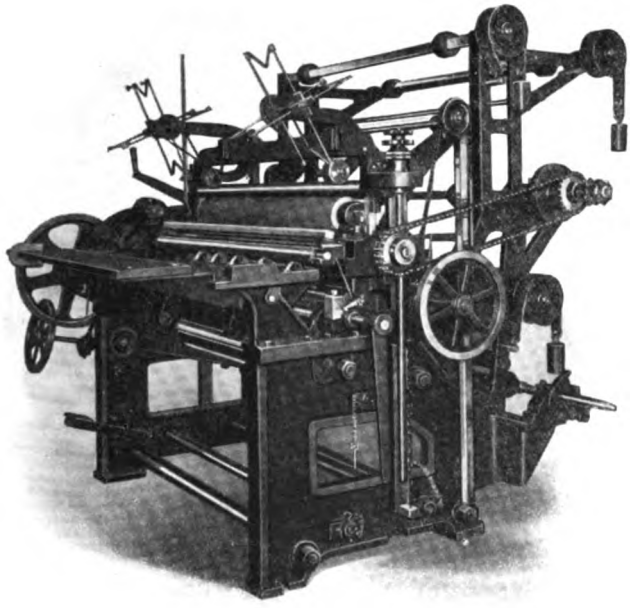

CAMERON SLITTING AND REWINDING MACHINE

cutters which press or cleave through the material in contact with the hard steel cutter roll and sever it into strips of the desired widths, which go forward side by side to the surface rewind apparatus. The score cutters give a clean, straight, even slit, do not stretch the edges of the material, can be quickly set for spacing different strip widths and operate at unlimited speed. Strips of any width or combination of widths may be cut at the same time.

The rewinding apparatus is so arranged that the resulting rolls are very firm, compact, evenly tensioned and free from overlapping or interlocking. The coils as they are being wound up, rotate upon a pair of supporting rolls, spaced quite closely together, of which the cutter roll is one. These supporting rolls are driven in the same direction and at regular speed so that the coils resting upon them will be formed by surface contact under a degree of pressure supplied by the pressure roll which bears upon the upper surface of the coils and holds them evenly in contact with the supporting rolls. This

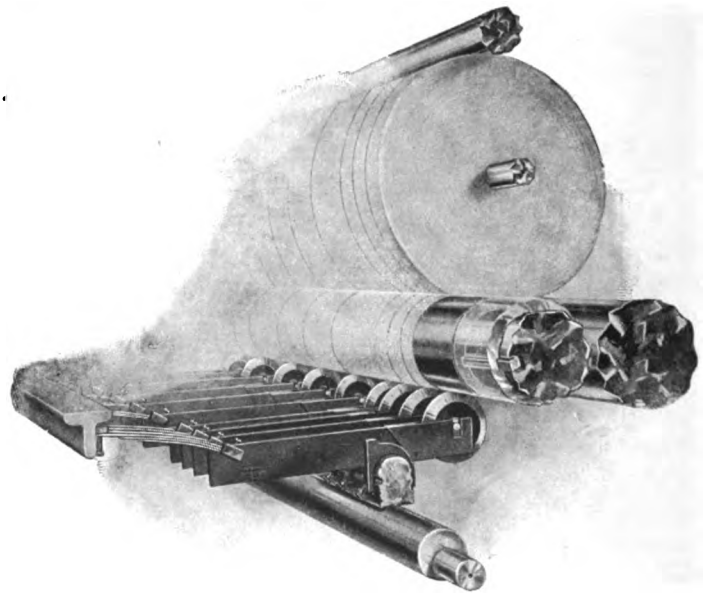

SCORE CUTTER AND SURFACE REWIND

pressure is adjustable to suit conditions. The coils are accordingly all wound up on the same rewind shaft side by side at a uniform rate of speed from the starting of the coil to the finish.

Provision is also made for removing a wrapper or separate cloth from the material previous to slitting, and for reinserting a wrapper in the rewound coils as they are rolled up after the slitting process.

INNER TUBE FORMING AND ROLLING MACHINES

Inner tubes were at first made by hand like hand wrapped hose, but numerous ingenious making-up machines and lesser appliances are now used when tubes are manufactured on any considerable scale.

Work Inner Tube Machine

The Work machine takes a strip of rubber from the cutting table over an endless belt, solutions the cut edges, dries out the solution. presses the edges together, hammers the joint and passes the finished tube along to where it is slipped upon a mandrel, and later cured. The illustrations show side elevations of the front and rear ends of the machine. *A* is a belt which passes around the roller *B*, then over a roller *C*, downward around roller *D*, upward over roller *E*, and thence over a drying table to the rear end of the machine, where it passes around an idler roller *F* at the extreme end and back under rollers *G* and *H* to the front end. This belt forms a carrier for the

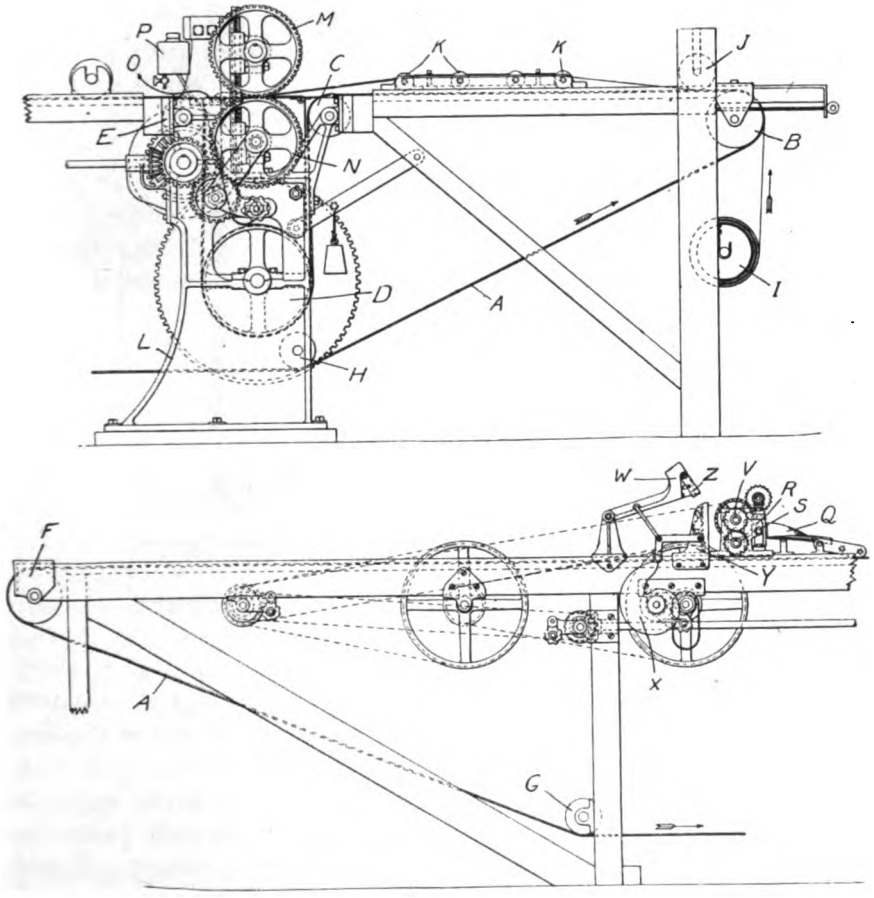

Front and Rear Ends of the Work Inner Tube Machine

strip of rubber unwound from the stock roll *I*. The strip is led on the belt *A*, under a pressure roller *J* and then over a series of rollers *K*, which fold it so that the edges meet. It then passes to the circular shears driven by gears *M* and *N* which cut the surplus stock from the edges. The folded strip then passes over a trough *O* where a spreading roller applies cement to the edges. The trough is kept supplied with solution from the tank *P*. The rear end of the machine is about

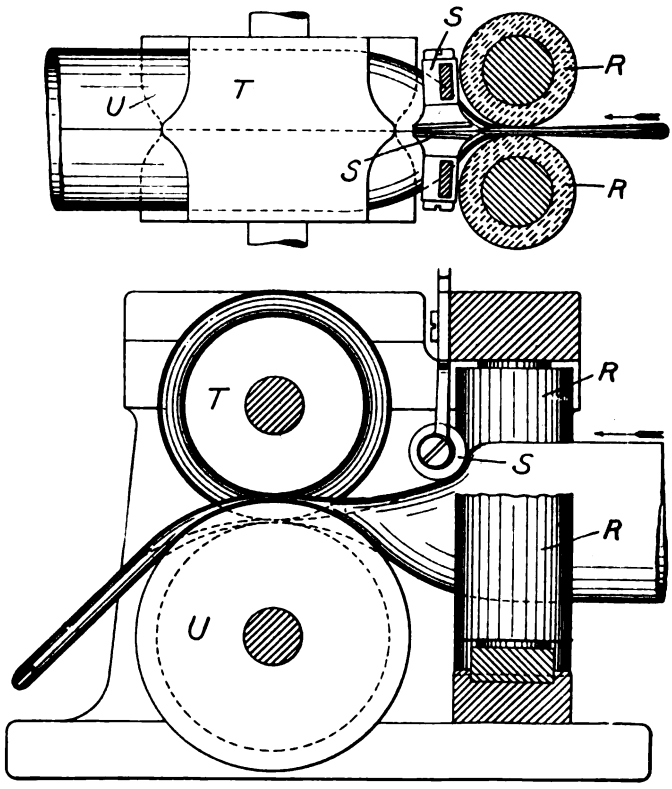

DETAILS OF WORK'S INNER TUBE MACHINE

25 feet from the front end, to allow time for the solvent to evaporate from the cemented edges. When the strip reaches the end of the drying table it passes over a deflector *Q* where the fold is opened, so that the edges are brought toward each other, giving the strip the form of a tube with the edges slightly apart. It then passes between a pair of vertical rollers *R* and then under pressure rollers *S* which unite and press the edges together. To insure complete ad-

hesion it is passed between a pair of horizontal rollers *T* and *U* driven by gears *V* (see detailed drawing opposite). The lower roller has a central groove while the upper one has a tongue projecting into the groove. This tongue and groove exert considerable pressure on the seam and thoroughly unite the edges. The tube is cut into lengths by a hammer *W*, tripped by a cam *X* which falls and strikes the upper blade of a pair of shearing knives. As the hammer falls the hinged block *Z* is pushed off the knife which a spring lifts, thus allowing the tube to pass on along the table. The hammer ascends more slowly as the cam revolves.

Bowden Tube Making Machine

This is a machine for making compressed rubber bands for hose and self-sealing inner tubes. Rubber sheet is fed through a series of rollers in pairs at one end of the machine and through a guide plate or rollers at the center of the machine to another series of rollers at the opposite end of the machine. As the latter are slower than the first series of rollers the rubber is compressed between the guides. Cotton fabric is coated with rubber solution by a set of rollers beneath the machine and passed with the rubber sheet between the second series of rollers. The solvent is evaporated by means of a steam heated chamber and the material is delivered from the machine with the rubber held in compression by the fabric to which it is then united.

Ellinwood-Miller Inner Tube Machine

Side and end elevations are shown of the Ellinwood-Miller machine for forming two lengths of inner tubing simultaneously. Journaled in the frame *A* is a shaft *B*, which carries a pulley *C* at each end. The shaft *D* also carries a pulley *E* at each end and is driven by belt pulley *F* and belt *G*. In the left upright of the frame are pivoted two arms *H*, which form brakes for the pulleys *I*. These arms are controlled by the levers *J*, ratchet *K* and springs *L*. The shaft *M* carries two reels *N*, on which the cloth strip is wound as the rubber strip is unwound and fed into the machine. These reels are driven by belts *O* running under adjustable idler pulleys *P*. The levers *Q* pivoted in the levers *R* may be pressed down by hand to catch the lower hooked ends under the shaft *M* to remove the winding reels *N*. The hoppers *S* contain powdered soapstone, which is agitated and fed by vertical screw shafts *T*, driven by gears *U*. The soapstone is spread on the rubber strips by brushes *V*, which leave a narrow unpowdered space along one edge of each strip for the lap seam.

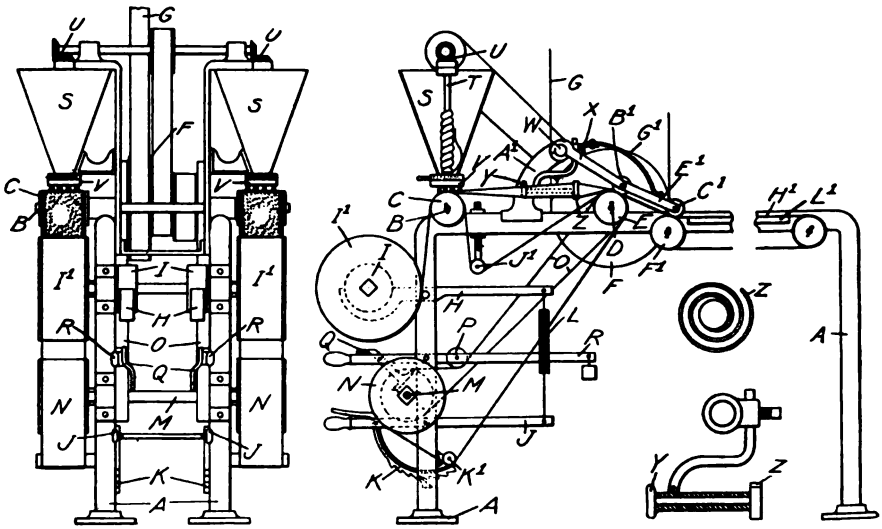

ELLINWOOD-MILLER INNER TUBE MACHINE

The tube forming devices are mounted on the right shaft *W* between the bars *X*. The round guide fillets *Y* guide the rubber strips which are formed into tubes by involute metallic formers *Z*. These parts are better shown in the detailed drawings at the right. Brackets *A-1* support rollers *B-1* and *C-1* between pivoted parallel bars *X* and *E-1*. These rollers are pressed down on pulleys *E* and *F-1* by flat springs *G-1* and thus press and close the seam in each tube. The endless belts *H-1* have a surface motion slightly exceeding that of the pulleys *E*, so that the folded tubes are drawn forward. The operation is as follows:

The rubber stock is wound in cloth on large reels *I-1* and is separated from it after passing the rollers *C*. The rubber strips pass under the hoppers *S* where they are brushed over with soapstone, leaving a narrow space along one edge to form the lap seam. They are then carried under the fillet guides *Y* and through the tube formers *Z*. The tubes thus formed pass under the presser rollers *B-1* and *C-1*, which calender the seams, and are carried by the belts *H-1* along the tables *L-1*, where they are cut into the lengths desired.

DOUGHTY INNER TUBE MACHINE

This machine takes a roll of sheet rubber, slits it into strips and passes them through a forming die, where the edges are pressed to

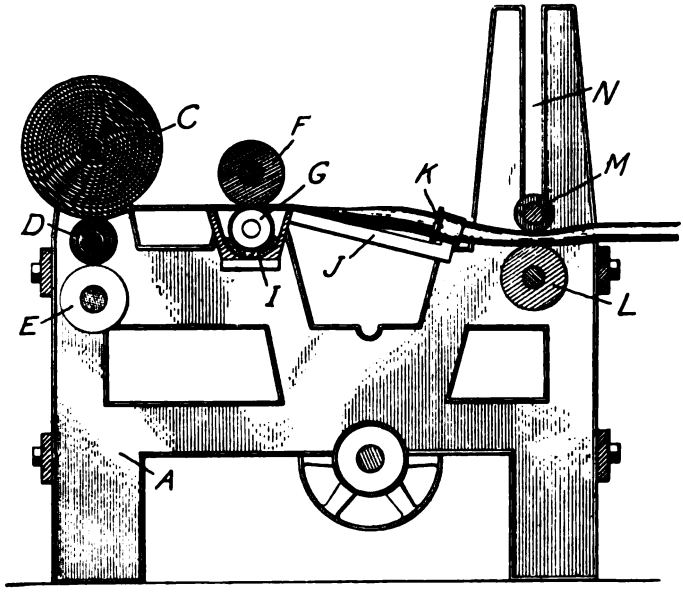

END VIEW OF DOUGHTY'S INNER TUBE MACHINE

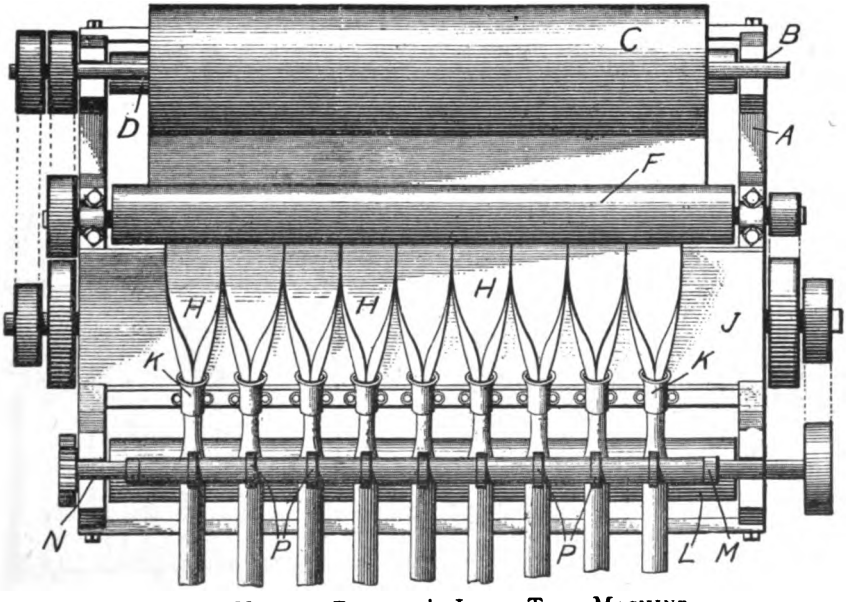

PLAN VIEW OF DOUGHTY'S INNER TUBE MACHINE

gether to form completed tubes. At one end of the frame *A* are bearings *B* in which rests the roll *C* of sheet rubber and protecting fabric. The roll *C* rests directly upon the roller *D*, which is revolved by the belt driven pulley *E*. As the sheet of rubber is drawn off the roll, the protecting fabric is wound up on the roller *D* for future use. The rubber passes between the roller *F* and a series of cutter disks *G*, which slit the sheet into strips *H*. The cutters revolve in a trough *I* containing naphtha or other solvent, which adheres to the edges of the cutters and is deposited on the edges of the strips as they are formed. Each severed strip passes over a table *J* into the flaring mouth of a die *K* and is folded into a tube with the edges abutting. The tube passes over a roller *L* on fixed bearings and under a roller *M*, which is free to move up and down in the slot *N* in the frame. On the roller *M* are disks *P*, which calender the seams and carry the tube forward.

Rucker Thread Winding Machine

This is a machine for applying a winding of thread around an inner tube. An inflatable mandrel is first inserted in the tube and the latter is covered with a helical winding of thread to within a few inches of each end. The tube is then spliced and the uncovered portion has the winding completed in the special machine as here shown.

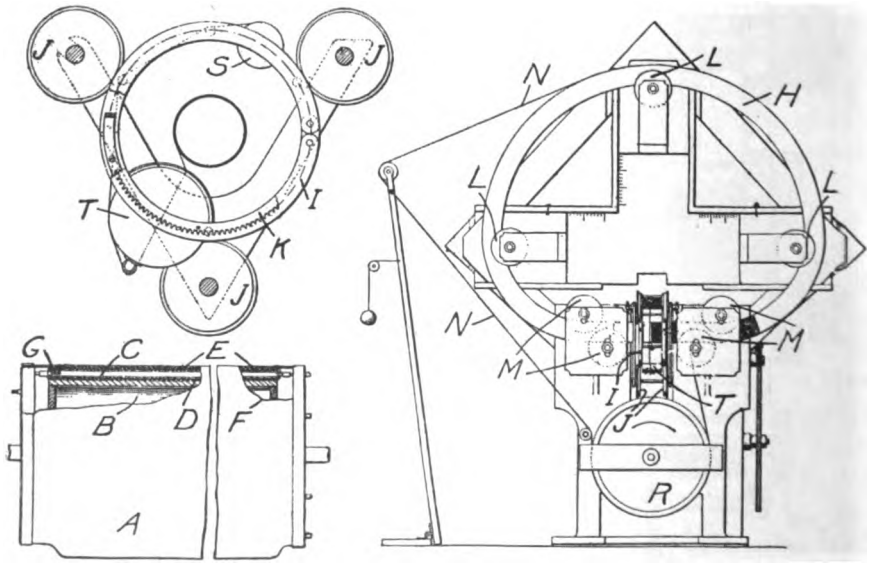

Rucker Thread Winding Machine

At *A* is shown a broken view of the inflatable mandrel. It consists of a cylindrical cord *B* surrounded by inflatable tubes *C*. Each of these is reinforced with inner and outer curved metal strips *D* and *E* enclosed in a canvas cover *F*. The rubber inner tube is drawn over the mandrel, which is then inflated through the valves *G*, expanding both the mandrel and tube. The surface of the tube is treated to a coat of rubber solution and a layer of thread is wound over it to form a close helix. Another coat of solution is applied and the mandrel deflated. The uncovered ends are then spliced together to form an endless tube. This, shown at *H*, is then inflated and placed in the winding machine to complete the thread covering. The tube is inserted through a hinged opening in the annular bobbin carrier *I*, which is rotated between rollers *J* by a toothed ring *K*. The tube *H* is guided by adjustable rollers *L* and *M* and moved slowly by a tensioned feed band *N* driven by the pulley *R*. The thread passes from the bobbin *S* through a solutioning chamber *T*, then around the tube *H*. It may be wound on either before or after the tube has been vulcanized.

Bridge Inner Tube Machine

The machine shown is an open wrapper, having a space between the rollers and the table, extending the full length of the machine both at the front and the rear. This allows a mandrel to be taken away at the back while another mandrel is inserted at the front. The movable top roller *A* revolves in three bearings as *B*, which contain adjustable eccentric rollers. By means of weights *C* and foot treadle *D* the top roller may be raised and lowered. The bottom rollers are supported in adjustable roller bearings and driven by gears *E* from the

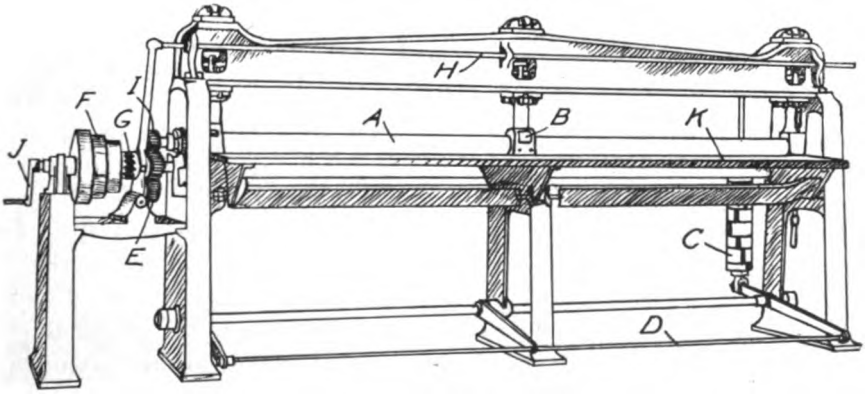

Bridge Open Type Inner Tube Machine

cone pulley F when the clutch G is engaged by the rod H which extends the full length of the machine. The top roller is driven by a gear I, through the gears E when the roller is lowered into operating position. By means of the crank J the machine may be turned by hand if desired.

Kremer Inner Tube Machine

In Kremer's machine the rubber tube is built up over a floating mandrel. A sheet of thin rubber, of much less thickness than the walls of the finished tube, is placed upon a carrier A. This is made of felt to allow the passage of air through it and to prevent the rubber from sticking. The sheet of rubber is carried toward the rear of the

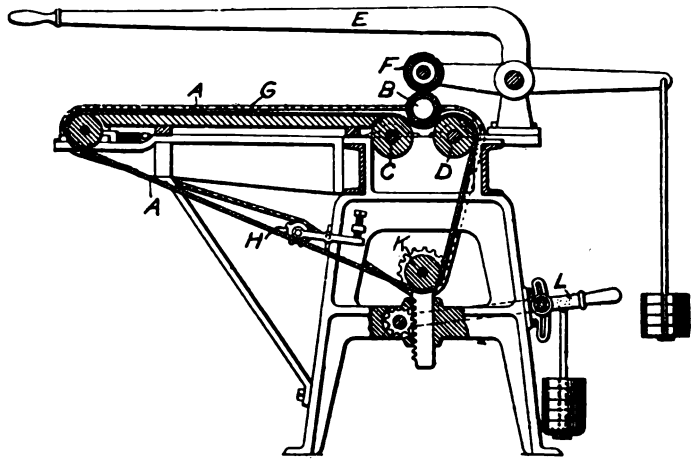

Kremer Inner Tube Machine

machine and under the mandrel B which floats between two rollers C and D. Since the surface of the mandrel is smooth the rubber will adhere to it and be carried around as the rollers continue to revolve. By means of the lever E the roller F is pressed down upon the rubber as it is wound, thus excluding air bubbles. The carrier is driven by a chain G which is kept tightened by the adjustable idler gear H. In order to keep the mandrel pressed up against the roller F the carrier A passes under a roller K which is held down by weights suspended from the lever L. As soon as the tube has been built up to the proper thickness the hand lever E is raised, the mandrel travels to the rear of the machine, where the finished tube is removed.

Current Inner Tube Rolling Machine

This machine rolls sheets of vulcanized rubber around a hollow mandrel, an operation requiring careful and experienced hand labor.

Referring to the drawing, which is an elevation of one side of the machine *A*, parallel housings *B* are provided with vertically sliding heads *C* connected to the mandrel rolling plate *D*. The vertical movement of this pressure plate is controlled by rollers *E*, sliding over upper and lower tread flanges *F*, *F*.

The mandrel *G* and sheet of rubber stock are placed on the table *H* and the screw threaded shafts *I* set in motion by the belt driven gearing *J*, moving the pressure plate over the table in contact with the mandrel, thereby rolling the sheet of stock around it. The mandrel and tube are then placed in a similar machine which performs the operation of cross wrapping in a like manner.

Gammeter Inner Tube Machine

Inner tubes for tires or tubes for making rubber bands are made on this machine from a strip of uncured rubber sheet. The side eleva-

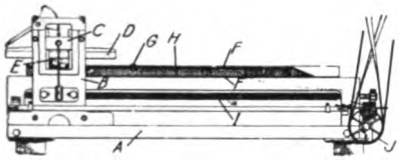

Current Tube Roller

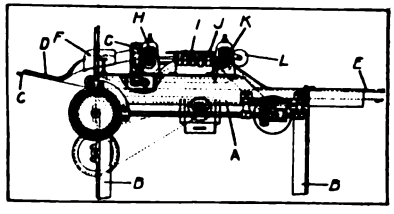

Gammeter Tube Machine

tion partly in section, shows the frame *A* supported on suitable legs *B B*. The endless carrier belt *C* delivers the rubber strip *D* on to the machine and carries away the finished tube *E* at the back of the machine.

The tube forming strip is doubled and the edges are cemented by a device on the left not shown in the drawing. On entering the machine the strip is directed to a vertical plane by a guide *F* and then passed between vertical rollers *G*. On emerging, it is received between two horizontal rollers *H*, which flatten the strip in a horizontal plane with the cemented edges butted together. The tube then passes over a raised bed *I* and under four rapidly moving percussion hammers *J* which weld the edges of the tube together. Within the tube and directly under the hammers is a floating mandrel which separ-

ates the walls of the tube as it moves over the anvil. The tube then passes between the horizontal delivery rollers *K*, and deflected by idler roller *L*, it is removed from the machine by the carrier belt.

Fenton Inner Tube Rolling Machine

Referring to the drawing, which is a side elevation of the machine, the operation is briefly as follows: The pole *A* is placed on the endless belt carrier *B*, and the four narrow rollers, two of which are shown at *C*, *C*, are brought down in contact with the ends of the pole and supported by the idler roller *D*, located under the belt. The sheet of rubber stock is now laid on the platen *E*, which rests upon and moves with the belt carrier. The upper edge of the sheet is then

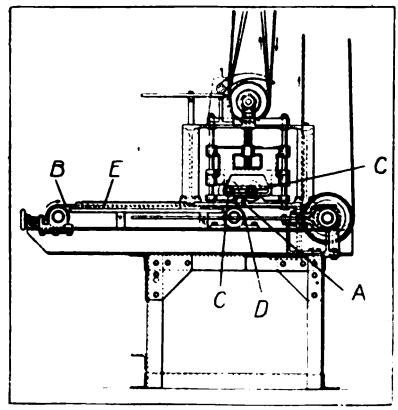

Fenton Tube Rolling Machine

solutioned, the carrier belt placed in motion, and the platen and the superposed sheet of stock are carried into the machine to a point where the edge of the sheet becomes attached to the revolving pole upon which it is rolled up, the platen being checked in a position which imparts a slight tension to the sheet and delivers it smoothly and evenly to the pole.

Nall Inner Tube Machine

Inner tubes are formed on this machine from a single continuously moving sheet of rubber.

An elongated platform or series of table sections is arranged over which an endless conveyor belt travels. At one end of this structure is positioned the stock rack, from which the rubber sheet with skived edges is fed from successive rolls on to the conveyor belt.

while at the opposite end is located the forming and pressing mechanism which transforms the sheet into a continuous tube adapted to be cut up into suitable lengths to provide inner tubes. Between these terminal parts of the machine are located, upon the elongated table and along the route of the conveyor belt, a number of mechanisms or appliances which are arranged to take care of the successive steps of washing off the talc from the skived edges, applying cement to these edges, partially drying the coated edges, folding the strip in a shaping tunnel to form a lap joint and rolling to the finished flat tubular form.

Witsaman Rolling Table

Especially in its pneumatic feature this device presents a radical departure from the old-time flat rolling table. The drawing is a cross section of the new table consisting of legs *A* and a flat base board

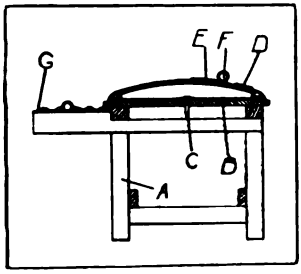

Witsaman Rolling Table

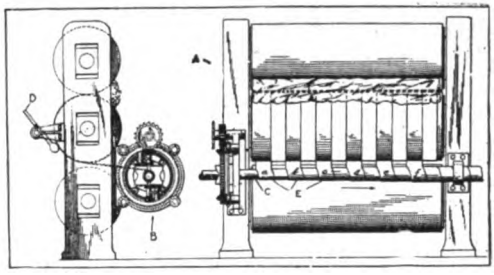

Tyler-Goodyear Tube Machine

B that is longer than the mandrel on which the tube is rolled. *C* is the valve through which the oblong rubber air bag that covers the entire top of the table is inflated, and *D* is a protecting strip that extends the entire length of the table.

The strip of stock *E* is laid on the table and the edges of the strip are moistened with rubber solution. The two operators place the mandrel *F* on the lower edge of the stock to which it adheres, and roll it up around the mandrel forming a tube. The mandrel and tube thereon is then rolled over the crown of the table and down to the rack *G* ready to be cured.

Tyler-Goodyear Inner Tube Machine

Inner tubes are built up from strips of rubber stock delivered directly from the calender roll and wound on mandrels that are continuously fed in a line parallel to the calender.

A represents a 3-roll calender on which is mounted the mechanism *B* for rotating the mandrels *C* and simultaneously moving them parallel to the calender rolls. The mandrels are constructed so that they can be detachably joined in longitudinal alinement. The strip cutting knives are shown at *D*, and at *E* the strips of rubber stock.

In starting the winding the strip indicated at (a) is wound on the mandrel to form the inner layer or lamination; the strip indicated at (b) is wound on the first layer to lap the convolutions of the strip (a), and then the strips (c), (d), (e) and (f) are successively wound on each other to have succeeding strips overlap the convolutions of preceding strips and to form the layers or laminations of material. Thus, after starting the winding on the first mandrel, the winding of subsequent layers to form a tubular covering on a series of detachably connected mandrels can be continuously performed.

After the strips of material have been wound on the mandrels, the material is cut transversely at the junction of adjacent mandrels, and the separate mandrels with the material thereon are prepared for vulcanization in the usual manner.

Roberts Tube Molding and Vulcanizing Apparatus

Two part hollow rubber articles, such as inner tubes, are made by this process, whereby the parts are first cut from a sheet, formed in a mold which causes the edges to adhere, and then removed to a vulcanizing mold in which they are seated by internal pressure.

In carrying out this process a square sheet of uncured rubber is laid on the upper surface of the plate *A* and a similar sheet is laid on the table *B*, shown in Fig. 1. The vacuum plate is then brought to a position directly over the table, the pedal *C* operated to raise the table, bringing the rubber sheet thereon into contact with the under side of the plate, whereupon the valve *D* is operated to apply vacuum to this plate, thus drawing both the rubber sheets closely into contact therewith. The table is then lowered, leaving the sheet held to the under side of the vacuum plate, which is moved to the position shown in Fig 1, directly between the forming molds.

A valve is operated to apply hydraulic pressure to the plunger, raising the lower forming mold *E* into contact with the rubber at the under side of the plate *A*, and the raising movement is continued, carrying the plate upwardly, bringing the upper sheet into contact with the upper mold *F*. Here the movement of the platen is stopped, the valve *D* is operated to relieve the vacuum in the plate, and a valve controlling the vacuum tubes *G* is opened, drawing the air from the mold cav-

ities and from the groove *H* shown in Fig. 2, securely holding the sheets to the mold members.

The platen is then lowered and the vacuum plate withdrawn, leaving the sheets held to the molds by vacuum. This plate is then moved to the position shown in Fig. 3, and the rubber sheets are again placed upon this plate on the table *B* while the forming operation is continued in the press.

The application of vacuum to the mold is continued until the rubber sheets are stretched tightly into the cavities, when the platens are brought together until the cutting edges meet, severing the rubber within the mold cavities, thus forming a substantially flat ring com-

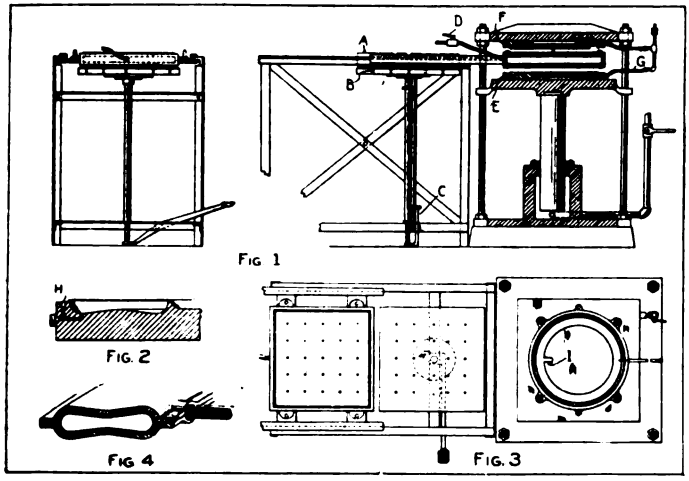

ROBERTS TUBE MOLDING AND VULCANIZING APPARATUS

prising two annular members having their edges pinched together by the bevel surfaces of the cutting edges, and thus caused to adhere. Upon separating the forming molds the tube is then removed and placed in a vulcanizing mold.

In making inner tubes for pneumatic tires, it is desirable to secure the valve stem between the meeting edges of the rubber ring severed from the sheets, so that when a tube thus formed is vulcanized it may be complete. Accordingly the cutting edge is looped inwardly as indicated at *I* in Fig. 3 and within this loop a cavity is provided into which the rubber is drawn by the suction, so that before bringing the forming mold together to sever the sheets the valve stem may be laid

on the rubber in the lower mold in this cavity, with its head in the concave portion of the trough. When the mold members are brought together and severed, the rubber is caused to lie closely about the shank of the valve stem and the sheets are severed entirely around the stem by the edges.

The vulcanizing mold illustrated in Fig. 4, preferably comprises two through-shaped members formed of pressed metal having convex portions complementary to the convex portions of the tube, while at the sides the cavity extends inwardly in concave form, fitting the concave sides of the tube. Flanges provide for securing the mold members together by bolts or clamps. At one point these flanges are bowed outwardly to surround the valve stem and press the rubber into contact therewith, while the remaining portion of the rubber surrounding the shank may be trimmed off at the inner sides of the flanges before vulcanization. A considerable number of tubes carried in such molds are inflated therein, pressing the walls of the tube tightly to the inner surfaces of the mold. These are then placed in a vulcanizing chamber and cured.

Inner Tube Poles and Mandrels

However formed, inner tubes are cured in open steam like hose, either on straight poles or circular mandrels and then blown off by

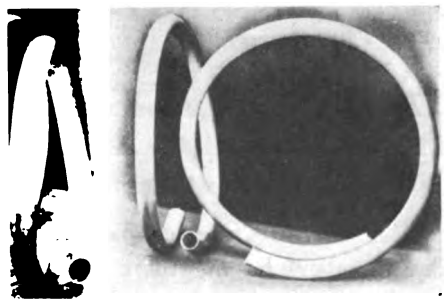

. Aluminum Inner Tube Mandrels

compressed air prior to joining the ends. The poles and mandrels are of iron, tin, steel, aluminum or glass highly polished.

Aluminum Mandrels

As aluminum has become one of the cheapest of the common metals and has several distinct advantages, aluminum alloy is now being widely used for making circular inner tube mandrels. The chief ad-

vantages of this white silvery metal are its light weight and the fact that it does not rust and is capable of taking a very high finish so essential to good inner tube making. As aluminum mandrels weigh only about one-third as much as corresponding iron and steel mandrels the advantages derived by greater facility in handling soon outweigh the slight increase in first cost. A two-inch aluminum tube ten gage and ten feet long will weigh about nine pounds, while the same mandrel in iron will weigh twenty-six pounds.

Republic Circular Mandrel

The principal advantages claimed for inner tubes that are cured on circular mandrels are that they conform to the shape in which they

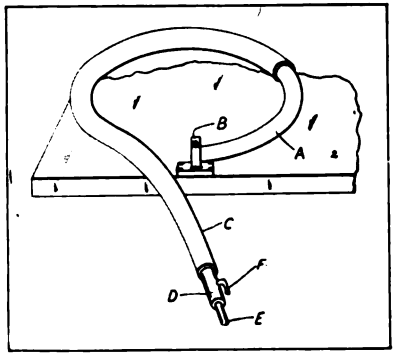

Republic Curing Mandrel

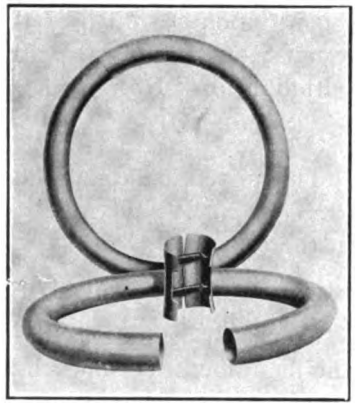

Republic Circular Mandrels

are used in the casings, meaning a more uniform thickness in the volume of rubber used and resulting in a tube of much better lasting quality. The accompanying illustration shows the Republic circular mandrel before the tube is applied, and the spring-controlled section by which the mandrel is made practically endless. These mandrels are made in all sizes from 3 to 12 inches in section, the 6-inch size and larger being particularly advantageous due to their comparative lightness.

Republic Mandrel

A discontinuous torus-shaped sheet metal mandrel *A* for forming and curing forced inner tubes is shown in the illustration, together with a suitable bench bracket device *B*, supporting the mandrel for the application and removal of the tube *C*, assisted by compressed air.

The entrance of the air for inflation is affected through a nozzle *D* attached to a hose *E* and controlled by a suitable valve *F*.

Brown Mandrel

This mandrel for curing Bonner self-healing tubes having the rubber in the thickened tread portion under compression when inflated consists of a spiral the diameter of a coil of which is materially less than that of the completed tube when inflated and so takes the form of nearly two coils in order to provide the necessary length of tubing. After vulcanization the tube is turned inside out to produce lateral compression and slight longitudinal compression of the thickened tread portion. It is then opened out and its ends are joined. Upon inflation the pitch of the curve of the tube is so decreased that the rubber, especially of the tread portion, is placed under pronounced longitudinal compression.

Foutts Mandrel

This invention comprises a mandrel provided with a depression for receiving materials for the valve patch which is made homogeneous with the tube.

Sherardizing Steel Inner Tube Poles

From the beginning the surface of steel poles or mandrels used in the manufacture of open heat articles, such as hose and inner tubes, become corroded and pitted, especially at the ends, thereby limiting their usefulness. This corrosion is due to the action of steam and sulphur gases on the exposed surfaces of the mandrels during the process of manufacture. Sherardizing, however, eliminates this difficulty and consequently has become a standard practice with regard to inner tube poles.

Sherardizing or dry galvanizing is a process of metallic sublimation applied by first grinding and polishing steel articles which are then packed in a container, with zinc dust, and subjected to heat. As the result, a deposit of zinc is formed that not only coats the steel surfaces but penetrates them and presents a hard, smooth surface of a silvery color that resists rust and will not peel. The deposit does not alter the dimensions of the mold since the coating is only .002 of an inch in thickness.

It is not necessary that all articles should be ground and polished as this process is applied only to mandrels which must be relieved of all holes to insure a perfectly smooth surface. The standard method

as applied to preparing material for nickel plating will usually cover all items.

It is recommended that a standard splicing connection be adopted on hose pole mandrels and all mechanical fittings intended to be sherardized, which would overcome any corrosions in the joint. Furthermore, to extend the life of inner tube mandrels or poles, plugs should be inserted in one end with a hole one inch square for turning in the lathe in order to overcome the ragged edges and the cutting of the mandrel so common when using a grip chuck.

Sherardizing of mandrels is essential at the present time, due to the need for saving steel, as a sherardized mandrel will last almost in-

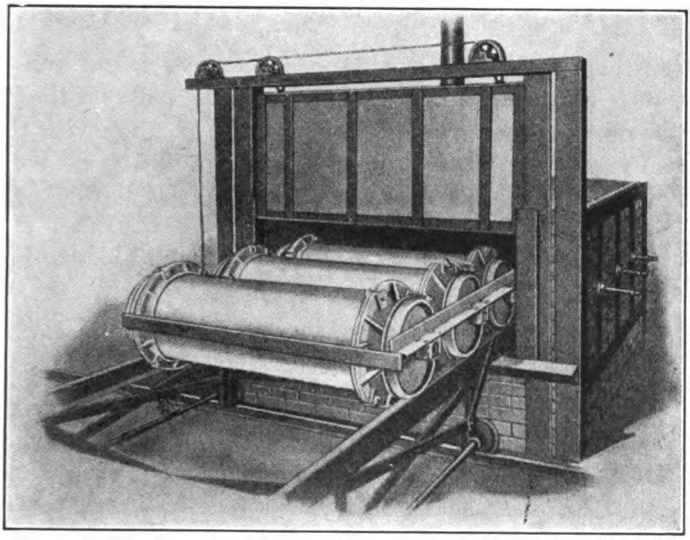

NEW HAVEN SHERARDIZING FURNACE

definitely and when worn it can be retreated and restored at a minimum cost. With this fact in view manufacturers have adopted a mandrel of no lighter than No. 13 gage on the very smallest sizes, which will allow regrinding and refinishing several times and still retain enough stock to answer general requirements.

By the Globe method tube mandrels are sherardized by placing them in a car similar to that in the next illustration. As nearly all tubes are 10 feet 6 inches long, the 13-foot cars are used more frequently, but tubes 17-feet long can be treated in the longest car. The mandrels are first polished and then arranged in rows of uniform

width, particular care being taken that the tubes do not touch, as sherardizing is imperfect when metal surfaces are in contact. Zinc dust is

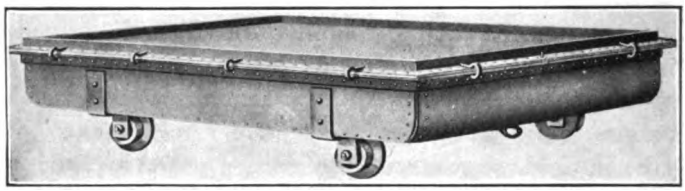

GLOBE SHERARDIZING CAR

then carefully packed about each mandrel so that pockets will not form when the dust settles.

After the tubes are packed, the car is sealed and run into the oven where it is heated for nine hours. As the pores of the mandrels expand the dust penetrates into them, forming an alloy with the metal, thus causing another factor of resistance in addition to the surface coating. Some manufacturers have all mandrels buffed after sher-

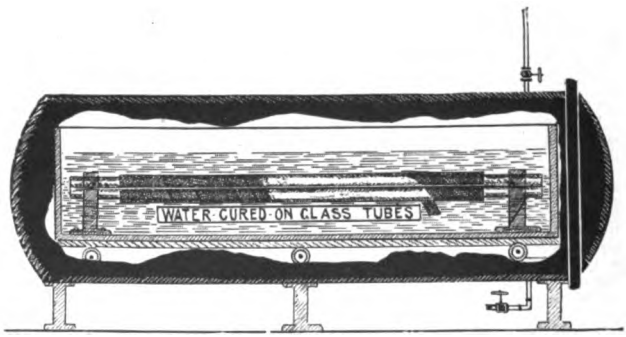

CURING INNER TUBES ON S. & W. GLASS POLES

ardizing, although there seems to be a difference of opinion concerning the necessity or efficacy of that operation.

S. & W. GLASS POLES

What is said to be an improvement on the ordinary method of curing inner tubes consists in vulcanizing them in hot water on glass mandrels.

The hot-water process, while not a novelty, has advantages in the manufacture of certain goods, particularly inner tubes, where a

soft, smooth finish is desired. Moreover, water curing is a non-burning process.

According to the S. & W. method illustrated here, the stock is built up on glass poles, and instead of the usual cloth wrapping, the tubes are covered with a seamless circular woven cotton jacket. The poles are then placed in a suitable tank mounted on a truck, which is rolled into an ordinary horizontal vulcanizer. The tank is filled with cold water, the vulcanizer head closed and live steam turned into the heater until the cure is completed.

Devices for Inserting and Removing Mandrels and Reversing Tubes

Compressed air is extensively employed in connection with several devices to facilitate the insertion of curing mandrels in tube ma-

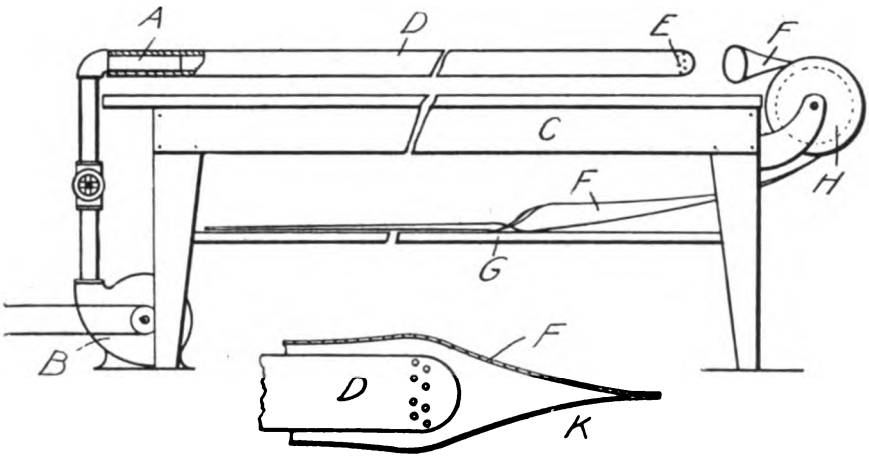

Miller Mandrel Inserting Machine

chines and seamed inner tubes, the removal of the tube from the mandrels after vulcanization, and turning them inside out.

Miller Mandrel Inserting Machine

A side elevation of Miller's apparatus for placing inner tubes on mandrels is shown. A pipe *A* connected with a blower *B* extends horizontally for a short distance over the table *C*. The mandrel *D*, adapted to slide over the pipe *A*, has one end rounded and perforated, as shown at *E*. The mandrel is dusted with soapstone and one end is

placed over the air pipe *A*, through which air is forced by the blower. The rubber tube *F* is led from the shelf *G* over the roller *H*. The end is opened and placed over the perforated end of the mandrel. The air inflates the tube, which is then easily drawn over the mandrel. This is shown in the detail drawing *K*, where the mandrel *D* is partly inserted in the rubber tube *F*.

Removing and Reversing Tubes

The removal of inner tubes from the mandrels on which they are cured is sometimes done by distending the tube *A* with a large bubble of air *B* and forcing it slowly along the mandrel *C* by hand pressure. The tube thus loosened is then turned inside out by hand. The lower diagram shows a method for removing and reversing the tube at one

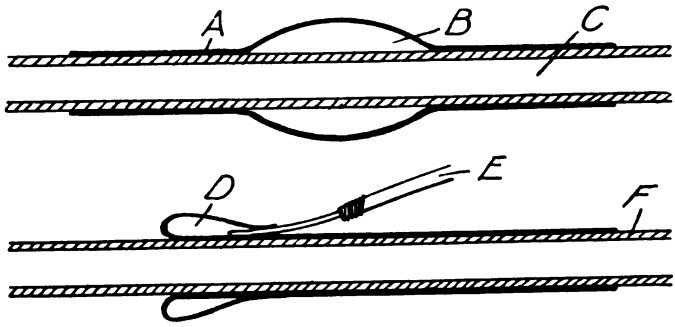

Removing and Reversing Inner Tubes

operation. It consists in turning the tube *D* back upon itself a few inches at one end, and under this reversed portion inserting a strong blast of air from a hose *E*. The tube distends and separates from the mandrel *F* at the folded portion as rapidly as it can be pulled backward and off the mandrel. One man handles the mandrels before the removal of the tubes and another the bare mandrels, while a third operates the air and strips the tubes.

Morgan Tube Turning Device

The following drawing illustrates Morgan's process for turning inner tubes inside out. Above the table *A* is an air blast tube *B*, which has a flaring mouth. The rubber tube *C* is pushed into the blast tube until the opening for the tire valve is opposite the flaring mouth of the blast tube. The half of the rubber tube remaining outside is folded back as shown at *D* and the edges of the tire valve open-

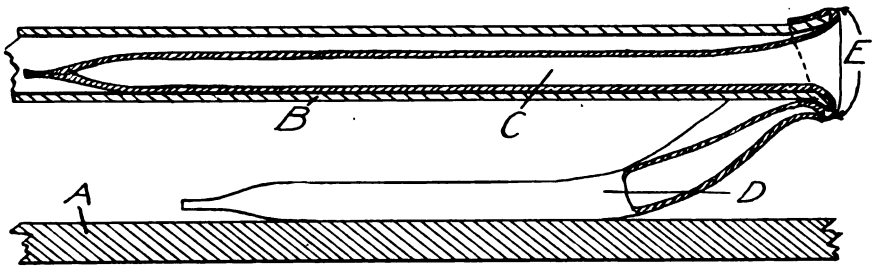

MORGAN TUBE TURNING DEVICE

ing are stretched over the mouth of the blast tube as shown at *E*. Air is forced through the blast tube, which causes the enclosed part of the rubber tube to be forced out and reversed at the same time. The other half of the tube is then treated in the same manner.

INNER TUBE WRAPPING AND UNWRAPPING MACHINES

For cloth wrapping inner tubes on pole mandrels prior to vulcanization in open steam and for removing these wrappings after the cure there are several special machines.

AKRON INNER TUBE WRAPPING MACHINE

A standard type of wrapping lathe for wrapping inner tubes with layers of wet rags while on mandrels, in order to give the rubber the necessary pressure during vulcanization, has a drive controlled by a

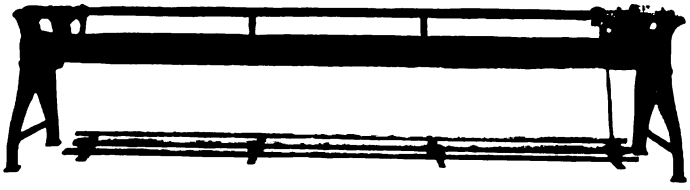

AKRON INNER TUBE WRAPPING MACHINE

foot pedal running the full length of the machine and can be easily started or stopped by the operator from any part of the machine. Having two sets of centers it also unwraps the cloth after curing. It is made adjustable to take poles up to eleven feet in length and is furnished with either universal chuck, tapered keyed cone, or square drive. A similar double tube wrapper is made so that two tubes can

be wrapped at the same time with two men working on each side of the machine, allowing more floor space in the tube room.

Akron-Williams Inner Tube Wrapping Lathe

The frame is substantially constructed of steel channels mounted on cast-iron legs and takes poles or mandrels up to ten feet six inches long. A belt-tightener arrangement starts and stops the machine. Pressing on the pedal running the full length of the machine forces an idler against the driving belt, tightening it so that it drives the lathe. Taking the foot from the pedal allows the idler to fall away

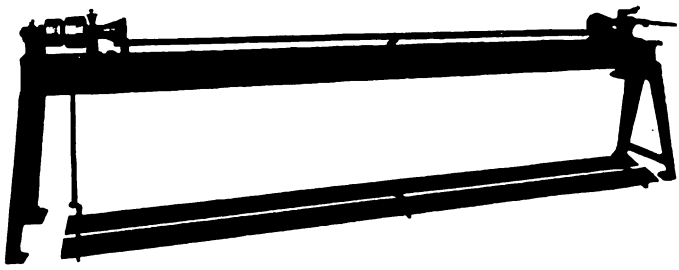

Akron-Williams Inner Tube Wrapping Lathe

from the belt and the machine stops. The regular cone drive with a key engaging slots in the ends of the poles, or an independent three-jaw chuck fitted to the spindle is furnished as preferred.

Bridge Inner Tube Wrappers

The Bridge "equal pressure" wrappers have three hollow steel rollers, eight feet nine inches, nine feet six inches or seventeen feet long supported by suitable cast iron frames and stands with full length wood tables back and front of the machine. The two bottom rollers and also the top rollers are provided with central as well as end bearings, the former having adjustable rollers to take up the wear and ensure perfect alinement of the rollers. Six adjustable roller bearings carry the adjustable top roller rams which are operated by levers through connecting links and a counterweight by means of a foot lever the full length of the machine in order to regulate the pressure of the roller on the material.

The machine is driven through a three-speed cone pulley, fitted with a special catch box. The sliding part of this catch box is fitted with a striking gear with stop rod the full machine length so that

it can be stopped from any part. The cone pulley is supported on a mild steel shaft running in suitable bearings, upon which is fitted a machine cut pinion, driving into a machine cut gear on the bottom back roller. The front bottom roller is driven from the back bottom roller by a series of machine cut gears and the top adjustable roller is driven from the bottom back roller through an arrangement of spectacle motion with steel machine cut gears, and fitted with a tooth claw box for stopping the top roller, so that it can be used for frictioning the material. A hand lever is provided for turning the machine around by hand when starting up the wrapping cloth.

Vey Inner Tube Wrapper

This is really a double lathe with parallel centers. The pole and uncured tube are placed in the back lathe, and the pole with the spirally wound fabric strip is placed in the front lathe. The strip is spirally delivered from one pole to the other by revolving both poles in the same direction. After curing, the strip is unwound from one pole and wound up on the other in the same machine.

Zwisler Inner Tube Wrapper

In wrapping machines which operate by pushing in by hand the connection between the mandrel, the spring which customarily holds the mandrel bearing in place is apt to weaken and loosen, causing the mandrel to fall out. This defect is avoided in the present machine by providing an air piston grip for operating the cone bearing by air pressure that enables the use of any size of mandrel. One treadle operates this cone bearing and an ordinary clutch at the other end simultaneously. This arrangement is peculiarly effective in an apparatus in which the mandrels are removed after each operation so that the clutch must be moved back from one end and the cone bearing drawn away from the other end to entirely free the tube mandrel.

Akron-Williams Rag Roller

This is a time-saving device of great accuracy and speed for unwinding the wrappings from inner tubes after curing. The mandrel and tube are placed before the machine, with the loose end of the cloth in contact with the roller. When power is applied the rag is quickly rolled off the mandrel and on to the roller. The rag may be removed with ease, after lifting a small rod that engages a hook at the top of the machine.

The roller takes up very little space, and may be installed on a bench or at any convenient place near the machine for wrapping tubes.

Allen Rag Roller

This neat and compact machine stands on its own metal frame and is operated through a friction clutch drive. As it is equipped with an instantaneous starting and stopping lever, the machine is

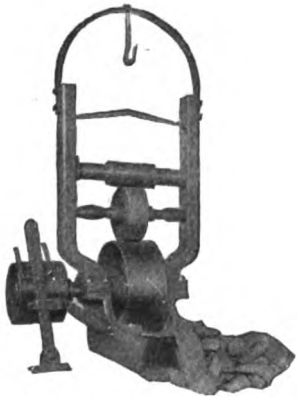

Akron-Williams Rag Roller

Allen Rag Roller

always under perfect control, assuring a smooth, uniform wrapping essential to perfect inner tubes.

Ross Inner Tube Unwrapping Machine

Mandrels bearing inner tubes wrapped helically with a fabric strip are fed along a chute in close contact to a point where a feeding device allows each mandrel to roll down singly between the edges of two large revolving heads into engagement with spring clamp bearings on the heads so that the mandrel is carried around an orbit with the heads, which have a capacity of eight mandrels and eight adjoining spools at one time. The operator then attaches one end of the fabric wrapping strip to an adjacent spool the same length as the mandrel which is one of a set of eight rotated by a separate motor. During one complete revolution of the heads the wrappings are unwound from each mandrel in turn, which is automatically ejected from the spring clamp bearings and allowed to drop onto guides from which is rolls on to a conveyor belt that carries it to a place where the tube is stripped therefrom and the mandrel returned for re-use. When all the eight spools

have been filled they are removed manually by the operator. The passage of the spring clamps from engagement with the ejector is coincident with the positioning of another wrapped mandrel which is at once engaged by the spring clamps so that the operation of the machine is substantially continuous and automatic. An adjusting device adapts the machine for use with mandrels of various diameters.

Inner Tube Vulcanizers

Inner tubes are commonly cured in horizontal vulcanizers like those used for the open cure process of tire casing vulcanization except for the trucks and spacing bars specially designed for inner tubes.

Biggs Inner Tube Vulcanizer

This consists of a vulcanizing cylinder with an inside track and a special car filled with inner tube mandrels supported by corrugated

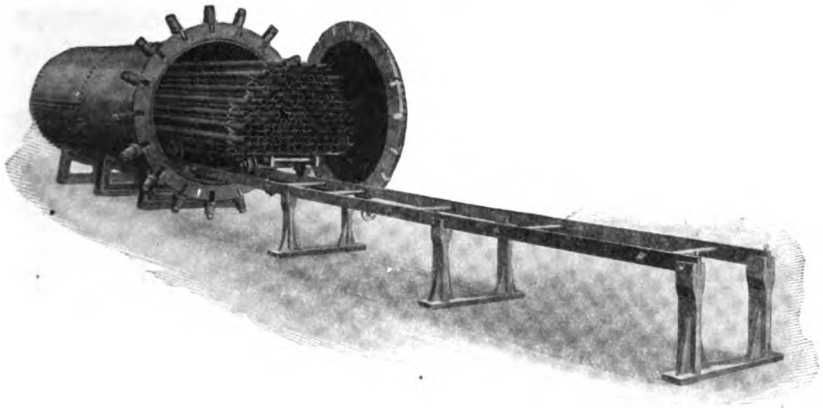

Biggs Inner Tube Vulcanizer

spacing bars. Part of the outside track is hinged to permit the closing of the door. This equipment is of the type commonly used in small plants where 75 to 100 inner tubes are to be vulcanized at once.

With somewhat the same type of vulcanizer cars are handled on transfer trucks, which run on rails parallel with the front of the vulcanizer. As soon as one set of tubes is vulcanized, the car is run out on the transfer truck, pushed to one side and another run in.

Biggs Built-in Tube Vulcanizer

This inner tube vulcanizer is set in masonry, with only the head, steam pipe, valves and gages visible. The tubes are conveyed to and

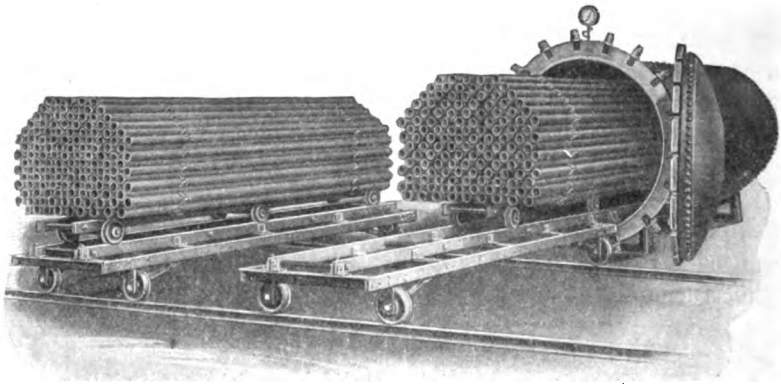

BIGGS VULCANIZER WITH TRANSFER TRUCKS

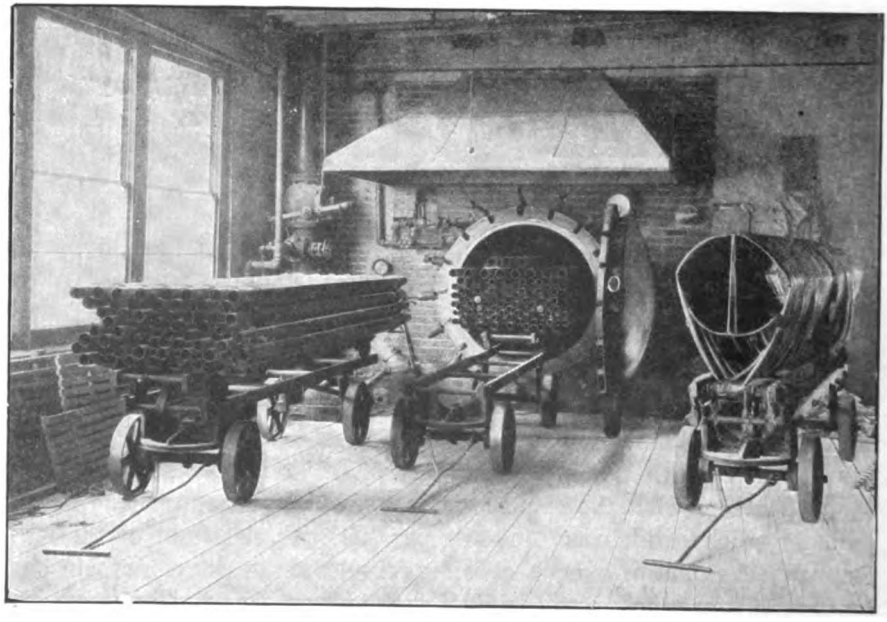

BIGGS BUILT-IN TUBE VULCANIZER

from the vulcanizer on trucks, which can be moved to any part of the mill. On the right is a truck equipped with a special form for holding inner tubes after the ends have been spliced ready for the final cure.

Inner Tube Vulcanizing Shells, Molds and Presses

Inner tubes are not all cloth wrapped on poles or mandrels and vulcanized in open steam. There are vulcanizing shells or formers and molds for curing special types of tubes, also presses for closing butt-end tubes and molds for curing the tube body, valve patch and butt-ends in one operation.

Young Inner Tube Vulcanizing Shell

When tubes are vulcanized flat, or without any support for the walls, crease lines appear along their edges, which tends to weaken them. In Young's shell the tube may be vulcanized without inflating or placing on a mandrel. The drawing *X* shows a perspective view of a short section of the shell containing the rubber tube in which *A* is the straight, tubular, sheet metal shell, transversely flattened. It is provided at intervals between the ends with ports *B* covered with fabric *C* or other steam filtering material, held in place by wires *D*. (See drawings *Z* showing two views of the shell). The shell can be opened

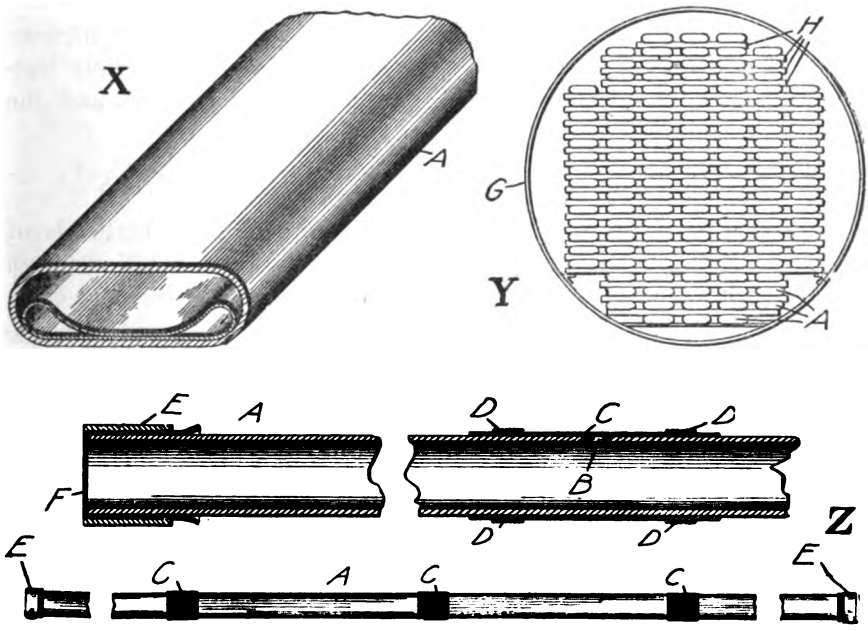

Young Inner Tube Vulcanizing Shell

at either end for introducing or removing the inner tubes. The end caps *E* also have openings covered with fabric *F*. The rubber tubes are easily introduced into the shells by holding the latter in an inclined position. After being thus placed the tube will flatten out upon the bottom when the shell is placed horizontally. The edges of the flattened tube thus rest against the curved sides and are raised and supported and assume the curved form seen in the drawing *X*. After the tube is in the shell the cloth caps are placed on the ends and the device is ready for the vulcanizers. The shells containing the tubes are piled up in layers in the vulcanizing chamber. The drawing *Y* shows a large number of these shells in the vulcanizer *G* arranged with metal strips *H* between each two layers, in order to permit a free circulation of steam around them.

When steam is turned on condensation within each shell is eliminated by the layers of cloth *C* and *F* over the openings. This retards the entrance of live steam so that by the time it enters, the shell is heated to the temperature of the surrounding steam.

Moseley Inner Tube Former

The Moseley former is a vulcanizing shell of the above character for the final cure of inner tubes in an annular condition after the tube has been formed and partially vulcanized in the ordinary manner and the ends have been joined. A number of these transversely flattened shells are arranged around a large supporting drum and the whole run into a horizontal vulcanizer.

Dunlop-Macbeth Inner Tube Vulcanizing Mold

In this mold the tube, valve patch and inter-fitting butt-ends of motorcycle inner tubes are all cured at the same time. The uncured tube body is formed with the desired shape of inter-fitting butt-ends, the valve patch is fitted to the tube and the tube is maintained in circular form and vulcanized in a two-part annular mold, the interfitting male and female ends of the uncured tube are respectively fitted into and onto correspondingly shaped ends of a cone piece which is interposed between and separates the two ends of the tube. The tube is then inflated with steam and vulcanized.

Bert Inner Tube Vulcanizing Mold

This is a mold for curing so-called self-sealing tubes.

The material with which the inner tube is made is placed around a hollow crescent-sectioned mandrel and is then enclosed within the

two correspondingly shaped parts of a vulcanizing mold. By circulating steam through the channel in one part of the mold and a stream of liquid at a low temperature through the hollow mandrel the outer part of the tread of the tube is more completely vulcanized than the inner part. Because of the shape in which the tube is vulcanized the outer part does not expand when inflated and hence the inner part becomes compressed, so that the outer hard part resists a puncturing object and the inner part tends to close a puncture.

Wick Inner Tube Vulcanizing Mold

The tube is placed in the mold and filled with hot water or steam, then subjected to heat on the exterior as well as on the interior. *A* represents the tube into which water or steam is introduced

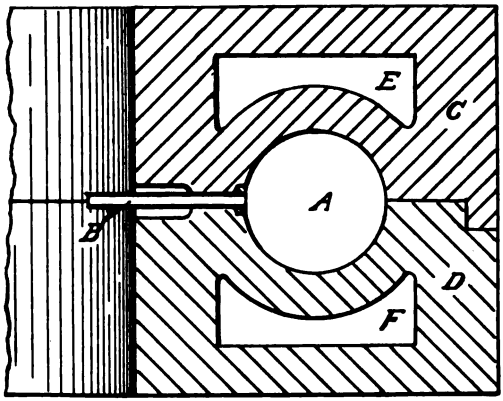

Wick Inner Tube Vulcanizing Mold

through the pipe *B*. The halves *C* and *D* of the mold are provided with steam chambers *E* and *F*. The mold is heated by passing steam through the chambers or by placing it in a vulcanizer.

Nall Multiple Butt-End Vulcanizing Press

This is a press for butt-end vulcanization of the two extremities of motorcycle inner tubes, each end of the tube being closed independently of the other end after the tube has been cured as a whole. It is of multiple type organized from a battery of separate press elements, say twelve in number, which are capable of successive operation in pairs by a single workman, who is thus enabled to employ the time required to cure the ends of one tube by loading or unloading the remaining presses of the battery in turn. Each element of a pair

serves to cure one end of the same tube. All of the press elements are commonly fed from a single source of actuating fluid and commonly guided by a single guide element against a single fixed head which does duty for the entire battery. There is an operating lever for each pair of press elements, which are capable of individual though simultaneous differential movement with respect to each other according to variations in the thickness of the material in the tube.

Inner Tube Beveling and Skiving Machines

For tapering the ends of the vulcanized inner tube in order to obtain a neat splice several skiving or beveling machines have been devised working on the lathe principle.

Olier Beveling Machine

Mounted above the table *A* is a hollow casing *B*, which holds the air tube to be beveled, the tube being inserted through a large opening in the casing, closed by a curved sliding door *C*. The casing is mounted on the end of a shaft *D* supported by bearings *E*. The reduced portion of the casing at *F* is supported by a steady rest carrying rollers *G*, which insures correct centering. A hollow sleeve *H*, beaded at the outer end, is attached to casing *F* by a bayonet joint, so that it is easily removable. The shaft *I*, supported in a bearing *J*, carries a tapered plug *K*, covered with hard rubber, and attached to the shaft *I*

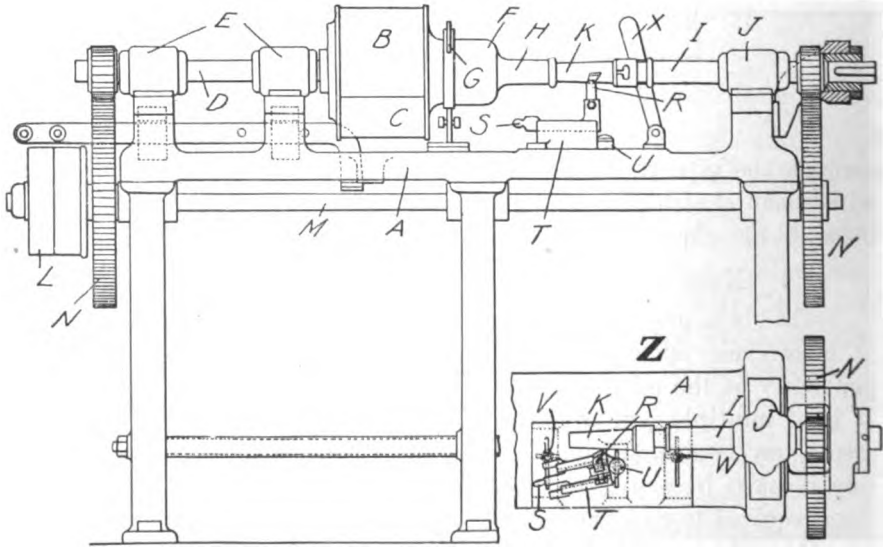

Olier Beveling Machine

by a bayonet joint. The two shafts *D* and *I* are driven synchronously by a belt pulley *L*, through shaft *M* and gears *N*. The bevel cutter *R* is an angle knife mounted on a handle *S*, adapted to slide on the carriage *T*, which moves cross wise on a pivot *U* in a slot in the table. These parts are better shown in the partial plan view of the machine at *Z*. The two adjustable stops *V* and *W* limit the slant of the knife with reference to the tube. The shaft *I* carrying plug *K* can be moved longitudinally in its bearings by the lever *X*.

In operating the machine the inner tube is flattened and wound on itself and inserted in the casing *B* through the door *C*. One of its ends is brought outside through the sleeve *F* and is mounted on the plug *K* which is moved toward it by means of the lever *X* until it is pressed close against the inner surface of the sleeve. The sliding door *C* is closed and the cross position of the carriage *T* is then adjusted so that the axis of the pivot coincides with the projection of the part to be cut. This is done by causing the pivot *U* to slide in its slot to the position required, where it is fastened by a wing nut. The machine is then started and the tube is beveled either inward or outward by slanting the carriage to the left or right.

Bridge Beveling Machine

The Bridge machine can be used for grinding and buffing cycle and motor inner tubes, as well as for beveling. It is constructed

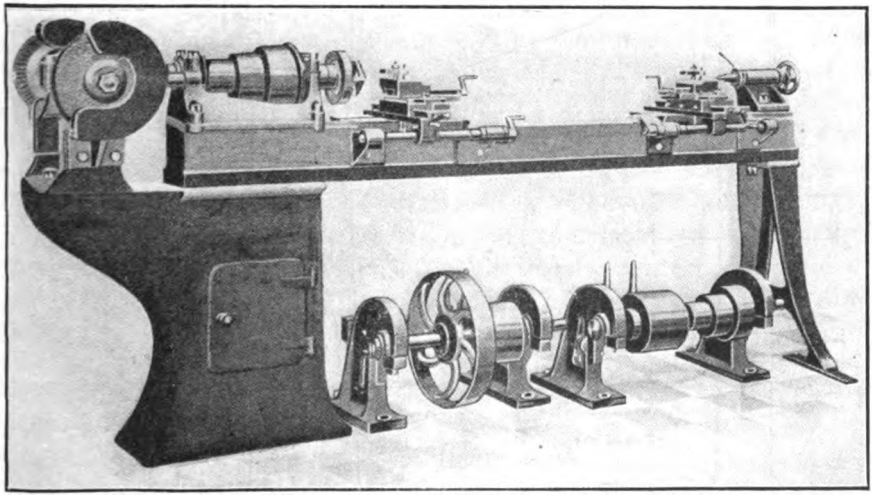

Bridge Beveling Machine

like a lathe, having a head stock and a universal chuck for holding one end of the mandrel, and an adjustable tail stock and center, which holds the other end of the mandrel. The wool carriage, provided both at the head stock and the tail stock, is operated by hand screws transversely and longitudinally. The grinding and buffing shafts, upon which are mounted a circular buff and brush, are attached to the hollow base which supports the head stock. The machine is driven by belt from the countershafts, shown under the machine.

Allen Skiver

This machine is designed for skiving or tapering the ends of tubes which are to be spliced. The cutting mechanism comprises a circular knife carried on an arbor which rotates at a speed of 2,000 revolutions per minute. The circular knife *A* is turned by power applied to the belt pulleys *B*, or by means of an electric motor *C* directly connected with the arbor shaft. The rubber tube is inserted through the centre of a brass arbor *D* and the end of the tube is folded back over the tapered end of the arbor. This stretches the tube so that it is slightly

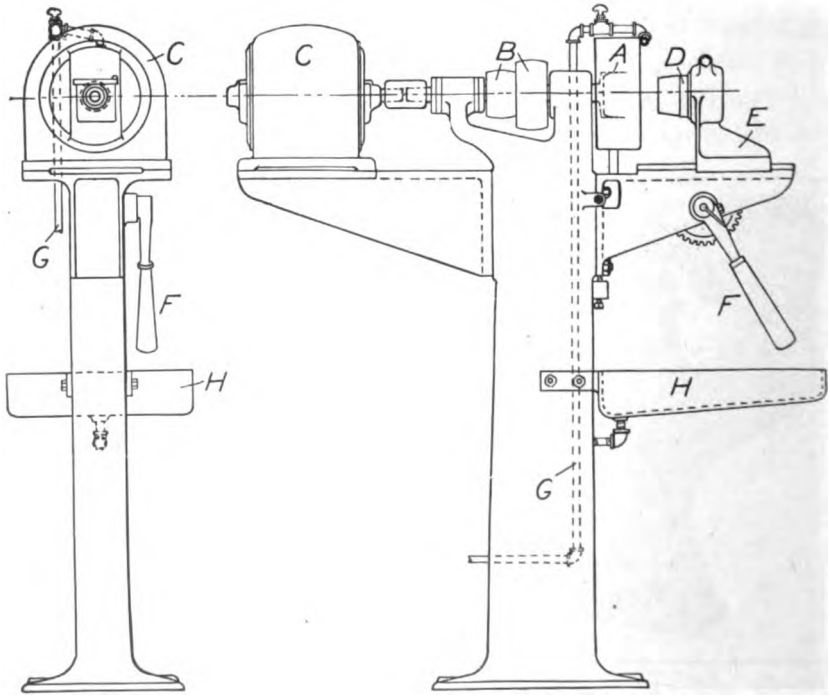

Allen Skiving Machine

larger in diameter at the end than at the place where it is folded over the arbor. The sliding carrier *E* of the arbor *D* is now moved toward the revolving cutter *A* by raising the operating lever *F*. This moves the tube forward into the knife, cutting away the rubber and giving the end of the tube a gradual taper. Water is supplied to the work through a pipe *G* in order that the rubber may be more easily cut and to keep the material and the cutter from overheating.

The flow of water is automatically released at the time of contact and is also automatically shut off when the carrier is brought back to its original position. This feature prevents undue waste of water besides being cleaner, as the excess of water would become sloppy and objectionable. The pedestal of the machine acts as a reservoir for the water which the pump forces to the knife and back again through the splash pan *H* into the pedestal.

The little shutter device over the knife, which operates automatically, prevents the hands of the operator from coming in contact with the knife when placing the end of the tube in position.

The machine is equipped with six knives and mandrels for skiving all sizes of tubes up to and including 5 1-2 inch. It is also furnished with drive with countershaft or direct connection to any motor that the customer may desire.

Hirth-Merkle Skiver

Cylindrical knives integral with a bottom disk are mounted so as to be removed from their carrying shaft by means operated entirely from the end of the machine remote from the knife. The base of the knife is pierced with a central opening which fits upon a seat of the flange of the shaft which is made hollow for the passage of a bolt. This bolt screws into a head which clamps the knife against the flange and drives it by a pin which passes through a slot in the knife and enters a hole in the flange. The bolt is either continuous and furnished with a milled head, or is in two parts coupled either temporarily or permanently. The shaft is driven through a coupling.

Inner Tube Splicing Mandrels and Vulcanizers

For splicing the ends of inner tubes there are several devices, some of them mandrels for the cold cure process, others mandrels, machines and vulcanizers employing steam.

Miniszewski-Printz Inner Tube Splicing Mandrel

This consists of a hollow cylindrical core formed from a number of similar segmental pieces which are held together by sliding pro-

jections and a heat resisting cord running through lengthwise drillings through the segments. The core is placed inside the prepared overlapping ends of the unvulcanized air tube, the end of the core being passed through the hole left for the inflating valve, and the ends are then pressed together by means of rollers in a special mounting and revolved by turning a crank. The tube is then removed from the rollers and placed in a ring-shaped mold in which it is inflated and vulcanized, after which the projecting end of the cord is pulled, whereby the pieces forming the core slide apart, and may be drawn through the valve hole. The apparatus is also applicable for solu-

Chamberlain Inner Tube Splicing Mandrel

By means of this tube splicing mandrel, an inner tube is smoothly spliced, all air is forced from between the cemented surfaces, and a

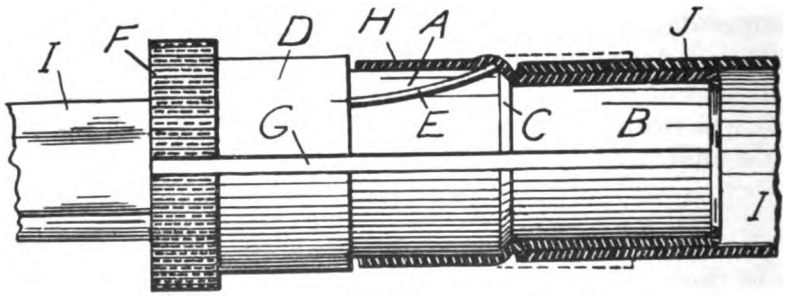

Chamberlain Inner Tube Splicing Mandrel

support provided on which the splice may dry. The tubular mandrel *A* has a small neck *B* with a shoulder *C*. The sleeve *D* slides freely over the mandrel and has a flat spring finger *E* extending outward toward the shoulder *C*. The head *F* of the sleeve *D* is knurled to provide a hand grip for turning the mandrel. A slot *G* is cut in one side of sleeve, so that when the tube has been spliced and made endless, it may be flattened and slipped out. In making a splice, one end *H* of the tube *I* is passed through the mandrel and folded back over the neck *B* and shoulder *C*, and over the body *A*, covering the finger *E* as indicated. The other end *J* of the tube is passed over that part which already covers the neck *B* of the mandrel. Cement is applied to the tube surfaces at *J* and at *H*. The hand grip *F* and the tube adjacent to the end *J* are grasped firmly, and the sleeve *D* is turned to the left while gradually forcing it lengthwise of the mandrel toward the splice.

This causes the finger *E* to fold back the end *H* over *J*. The difference in the diameter of the mandrel *A* and neck *B* is such that when the tube ends are placed as described and the end of the tube *H* folded over, the finger *E* will press upon the outer surface of the splice and exclude the air. When the spliced tube is dry it is removed by passing it through the slot *G*.

Lee Inner Tube Splicing Mandrel

This mandrel comprises two metal or other suitable parts hinged so as to form when closed by clips a tube of circular, oval or other desired cross section, of which the outer surface is smooth and free from projections. The ends of the tube are jointed together by passing one end of the tube through the hollow mandrel, turning it back over the mandrel to form a cuff, and passing the other end of the tube over this cuff, which is again folded back on the other end of the tube the joint being finished in the usual manner.

Allen Inner Tube Splice Vulcanizer

The Allen air-cooled vulcanizer consists of a two-part hinged cylinder cored for steam, and provided with heat radiating flanges. It

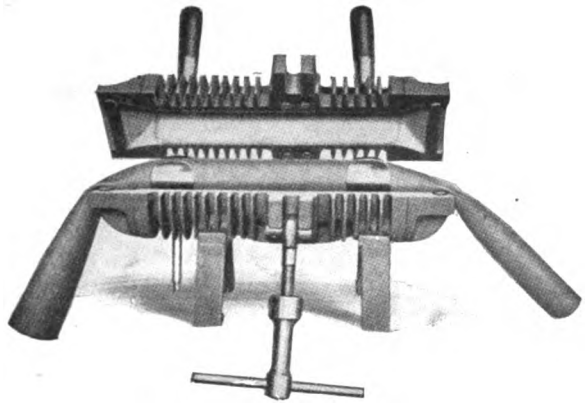

Allen Inner Tube Splicer Vulcanizer

is supported on standards for convenient operation from a bench or table. There are two handles for opening the vulcanizer, and a swinging bolt operated by a socket wrench for tightening the two halves together. The inside of the cylinder is bored to exact size of the inner

tube. The ends, however, are closed and act as clamps, limiting the air to the confined part of the tube. An opening is provided in the lower section of the vulcanizer to accommodate the valve stem. The tube is skived, cemented and placed in the steam-heated cylinder, which is then closed, locked, and the part of the tube within the vulcanizer is inflated against the walls of the cylinder. When the cure is complete the steam is shut off, and after the vulcanizer cools down, which is greatly facilitated by the heat radiating flanges, the tube is removed from the cylinder.

"H. F." Jointless Joiner

Although intended primarily for the repair of inner tubes, this device may also be used in their manufacture. It consists of an ex-

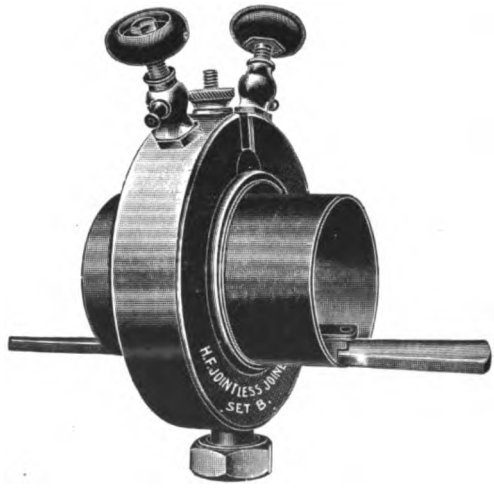

"H. F." Jointless Joiner

panding mandrel operated by a ratchet and pawl with segmental rack. The cure is effected by placing the prepared overlapping ends of the inner tube on the mandrel within a steam heated ring mold having a detachable key piece for removal of the tube after the cure. A set of hollow cylindrical liners are supplied for reducing the size of the mold opening.

Angelican-Robinson Inner Tube Spincing Mandrel

This mandrel consists of a metal tube having a longitudinal slot and provided with a steam jacket. The inner tube is passed through

the slot, and the ends to be joined are folded on the outer surface of the jacket. The joint is bound tightly by means of tape and is vulcanized by passing steam from an outlet pipe around the end of a longitudinal partition to an outlet orifice provided with a stop cock, the slot being closed by a special plate.

Van Note Inner Tube Splicing Machine

It consists of a base and a pedestal that supports the expanding mandrel and the tube turning head. The mandrel is formed by

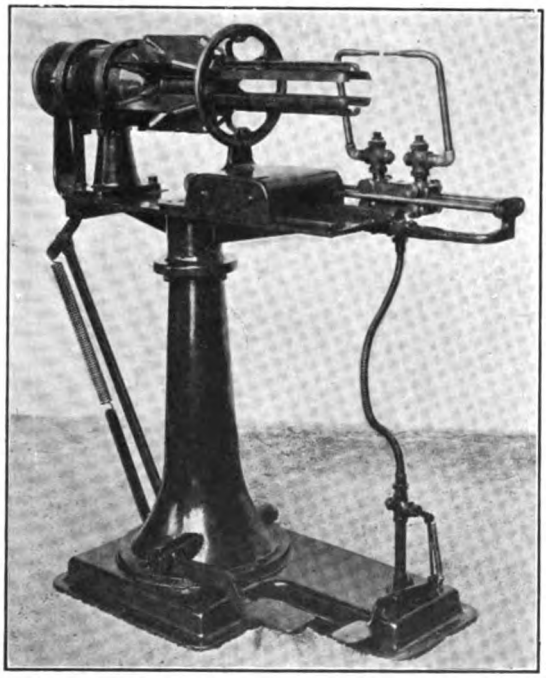

Van Note Inner Tube Splicing Machine

six segments that are expanded and contracted by a toggle joint operated by a foot treadle. Leather bands are fastened to the end of each segment and their opposite ends are attached to the drawing head wheel. The skived tube is placed over the mandrel, which expands automatically, holding the tube firmly in place. The drawing head is pulled forward by the hand wheel and the bands turn the male end of the tube. The reverse turn is made by compressed air and a simple motion of the operator's fingers.

Kremer Inner Tube Splicer

Kremer's machine splices the ends of tubes by compressed air. The process consists in clamping a short section in a mold so that the air is confined in a small space, that section including the ends to be spliced. The upper drawing shows the mold in longitudinal section, the lower an exterior view of the mold and air tank. The mold con-

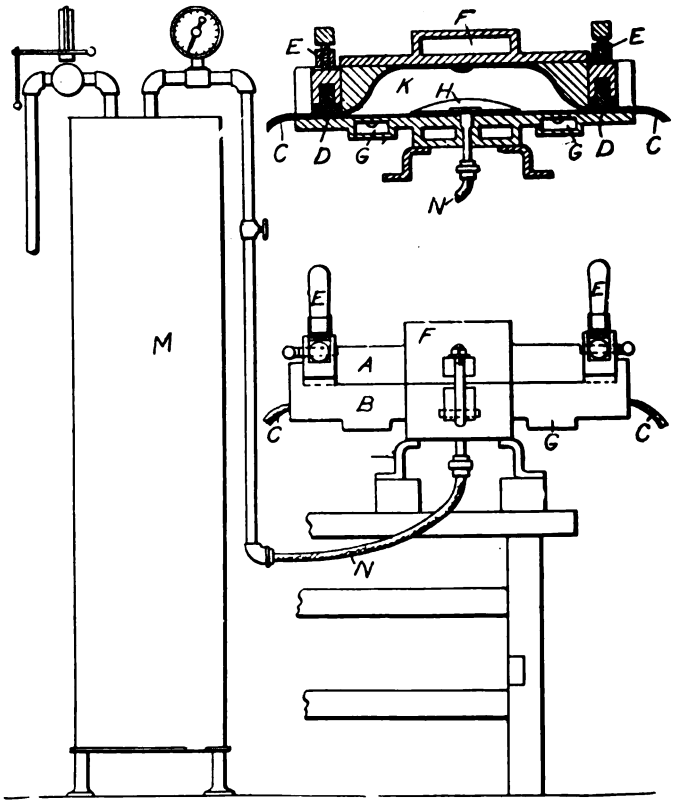

Kremer Inner Tube Splicer

sists of two parts *A* and *B*, between which the two ends of the tube *C*, are clamped. In order to form an air-tight chamber the ends of the upper part *A* are provided with rubber blocks *D* which press down upon the tube being raised or lowered by the screws *E*. Surrounding the mold directly above the ends of the tube are steam jackets *F* and near the ends of the mold are water jackets *G*. The tubes are spliced preferably at the point where the air valve is located that splice and

valve plate may be vulcanized in one operation. When the tube has been clamped in position air is admitted under high pressure from the tank *M* into the space *K*, through the hose *N*, thus causing the tube to be held firmly against the walls of the mold. The water jackets prevent the vulcanization of any part of the tube except that near the ends to be spliced.

Allen Expanding Core Inner Tube Splice Vulcanizer

This device for splicing the ends of inner tubes consists of a steam-jacketed cylinder provided with a spacer in the side for inser-

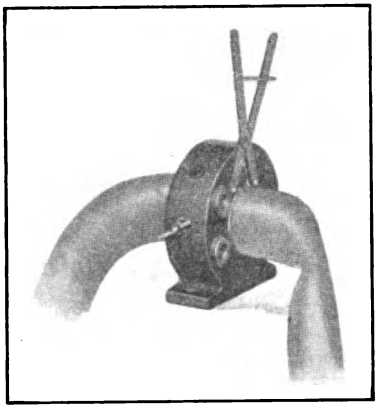

Allen Splice Vulcanizer

tion of the tube. The skived ends of the tube are folded over the expanding core, the splice being pressed against the walls of the cylinder by a specially designed tong, as illustrated.

Hall Inner Tube Splicing Mandrel

This is tapered and made of a series of transverse cardboard or papier-maché disks, surrounded by and supporting a tapering tube of similar material. When the tube has been spliced, the mandrel is dissolved, or reduced to pulp, by water or steam.

Lowe Inner Tube Splicing Mandrel

Both inner and outer mandrels are slotted their entire length, the later being provided with an annular passage through which air is forced, blowing the end of the inner tube that is on the larger mandrel over the end of the tube on the smaller mandrel, thereby forming the splice.

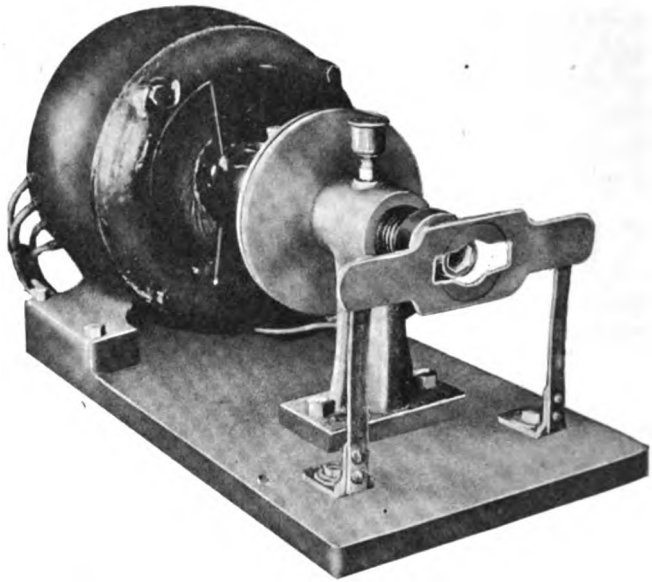

GILLETTE INNER TUBE VALVE NUT TIGHTENER

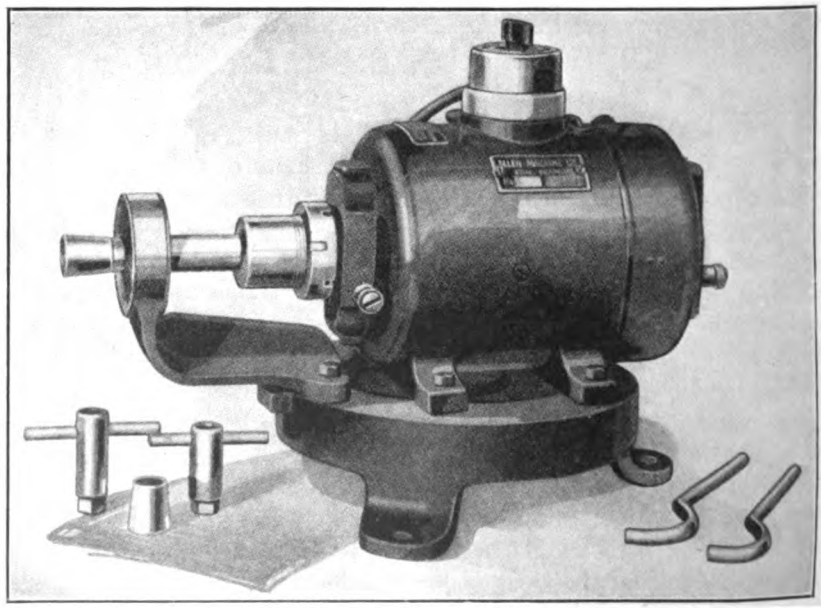

ALLEN INNER TUBE VALVE NUT TIGHTENER

MISCELLANEOUS INNER TUBE MACHINERY

Gillette Inner Tube Valve Nut Tightener

The simple but important process of running up the valve nut on the stem of an automobile tire valve is speedily and securely done by various devices, one of which is shown in the illustration on the opposite page.

In this machine a small electric motor rotates a direct-connected hollow spindle, the entrance to which forms a socket wrench for the reception of the valve nut. In front, a suitable guard is placed which serves as a support against which the operator holds the inner tube and valve base during the tightening process. There is a special clutch with a spring attachment designed to eliminate any danger of the tube catching and turning around while the operator is holding it.

Allen Inner Tube Valve Nut Tightener

This small electrically operated device runs the inner tube lock nuts into place at great saving of labor. With one operator it will equal the work of about eight boys, tightening every nut to exactly the same tension, determined by means of an adjustable friction clutch. The motor is of the universal type and can be connected to any ordinary lighting socket, allowing the machine to be placed on any convenient bench.

Sarco Transfer-Printing on Inner Tubes

The advent of the automobile called for a new kind of printing, that of transfers for imprinting the size and brand on the inner tube. In the early stages of the tube industry, the size and name were put on with stencils, a process neither satisfactory nor economical. After various stages of development, printing transfers were found to be the best.

Although there are different kinds and grades of transfers, all fundamentally alike, the best results, are secured by thin cloth, glazed on one side and printed with a sizing and then finished with a copper bronze. The greatly increased cost of cotton, as well as labor, makes these expensive. In curing the tube, the action of the sulphur causes the bronze to change to a dense black. The next best process is to print on the cloth with a special black ink.

Even before the increase of the price of cloth, many tube makers had adopted the use of paper transfers, as they were much cheaper and give satisfactory results so far as the transferring qualities are

concerned. The only difference in results between the cloth and paper transfers is that of removing the stock after the tube comes from the vulcanizer. The cloth can be readily stripped from the tube, while the paper sometimes sticks more or less, according to the compound and the local conditions. Paper labels can be printed with bronze or black ink. In either case special ink and paper are used; the former must not dry hard, and the latter must not absorb the ink. It may be truthfully said that paper perfectly satisfactory to some makers has not been found to work under all conditions.

Printing transfers is a specialty for other reasons than the use of cloth, special paper and bronze or ink, as the type and cuts must be the reverse of those used for regular printing, except that of offset work, the imitation of lithograph, which has practically superseded lithography. After the transfer is printed the reverse of the regular way, it is placed on the sheet of rubber, wrapped around the tube mandrel which is then put in the vulcanizer and subjected to the curing heat. When the tube is taken from the vulcanizer the ink or bronze has left the cloth or paper and been transferred to the tube.

McClenathen Inner Tube Deflator

In the manufacture of inner tubes it is customary to inflate them as a test for leakage, after which the air must be removed before packing for shipment. This deflating operation is a matter of considerable time and expense in factories where the output runs into thousands daily. The usual method of deflating inner tubes is to connect the valve stem with an operating vacuum pump, the tire resting on the floor on a table with a weight laid on it opposite the valve stem to prevent closure of the outlet by suction. With the McClenathen deflator the mere placing of the tube in position for deflation simultaneously and automatically opens a valve in the vacuum system and the valve of the inner tube, also pinching up a portion of the tube opposite the valve base and holding it clear of the opening.

CHAPTER XXXIV

TIRE RIMS AND FASTENINGS

THE use of the word rim, in connection with automobiles, calls up a rather curious evolution in the wheelwright's craft, and at the same time acknowledges the indebtedness of the motor car to the bicycle. The needs of the automobile have thrown a considerable strain upon the wheelwright's vocabulary, and this last has not exactly made good, by the way, though it has proved more resourceful than our sister languages in Europe. Here, as in many other respects, we have reason to congratulate our mother tongue for its fertility. The French and Germans have been able to keep up tolerably well by transliterating our terms, they being generally able to break our compounds into their syllables and translate them a syllable at a time.

Early Rim Design and Patents

The regular wagon wheel has a tire, which is a simple steel band, and a rim, which is also called a felloe. Beyond that are the spokes, hub,

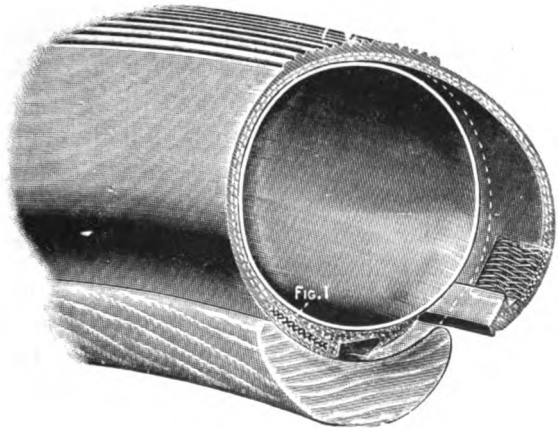

Cycle Tire Rim—English

and so on. When the solid rubber tire supplanted the iron tire, to keep that member on, it seemed necessary to cut a channel in the rim. Soon, however, a separate iron channel was invented. Next came the inflated tire, resting in a hollowed rim of wood or metal. The

word felloe was lacking in the wheelman's vocabulary, and rim was heard only in connection with the question of wood versus metal. The clincher tire followed, which, demanding a rim of a peculiar shape, attracted general attention to rims; and from that day to this, the word rim has been used more than all the rest of the wheel vocabulary put together. Rubber tires had always needed rims, but the rim had become the thing of things. Pneumatic tires and wire wheels went together as a matter of course, the spokes fastening directly to the rim, after which came the fashion for wooden automobile wheels, with a felloe upon which the rim had to be fastened. Then came a new rim which had one flange detachable; following which time flanges long rivaled rims in importance. Then came a rim which could be detached from the felloe bodily. Incidentally, for the strength of the wheel, it was found necessary to shrink a steel band upon the felloe, so that the rim carrying the tire might be easily slipped on or off. Thus the wheel, with rim detached, finally got back its original shape.

As has been shown elsewhere, the early tire patents related chiefly to rims. Those of the first solid tires had to have the channel cut out of the iron by machinery, making them very costly. Anybody could put in the tire. Then a method was found by which the rims could be rolled into shape from a flat strip, making the channel very cheap, as compared with the tire. This became the standard channel, or at least the standard for solids. The tire would occasionally pull out, however, and the British conceived the idea of bending the flanges inward, so that the base of the tire was both compressed and gripped, something like a clincher rim. This method was used largely in England, and was later revived in America for solid or cushion tires to be used with or without internal cross wires. The American method of holding tires on by internal or side wires, now used everywhere, revived the standard channel rim.

Dunlop-Welch Hollow Center Rim

The wired-on type of tire is generally considered the first detachable pneumatic. The principle of the Dunlop-Welch tire, illustrated in Chapter I, was very ingenious. The wires in the edges of the cover were both rigid and smaller in circumference than the sides of the rim in which they lay, so that the tire could not be forced off bodily, unless the wire was broken. The center of the rim was hollowed out all around slightly deeper than its height above the resting place of the holding wires; so that when the wired edges were pinched together into the hollow of the rim, the edges of the cover could be

lifted over the sides one at a time. It was found, however, that in the case of motor cars, the side strain, which was unknown in bicycling, was liable to force the wired edges into the hollow of the rim, thus detaching the tire while running. The inventors then set to work and succeeded in producing a channel rim with one side or flange removable. It was next found possible to make the rim flat bottomed, instead of concave, so that there was no more danger of involuntary detachment, so long as the wires and flanges held. This improvement was a very perfect form of attachment.

The Clincher Rim

The clincher rim, whose development is commonly associated with the North British Rubber Co., was probably the most sensational feature ever brought into the vehicle world, and from the time of its introduction, it was for many years the standard rim for pneumatics. For some years after the principle became known, this rim appeared in a variety of forms; but for years it has been standardized by agreement among makers the world over, so that it now appears only in one shape, which is familiar to everybody.

It seems well right here to clear up some misconceptions commonly held with regard to the clincher principle. The clincher hooks to the rim, and nothing else. The hooking may be made more secure by the pressure of the air inside, and as formerly used with large tires it was made still more secure by the use of lugs; but the essential and only principle is that of a continuous hook, represented by the bead.

The Bartlett Rim

In Chapter II are illustrated the typical Bartlett tires and rims between the years 1889 and 1895; and it is apparent that there is no attempt at a hook, while the patents all insisted upon the necessity of inflation. In the 1894 model the edges of the cover show a pronounced enlargement, and the rim flanges are slightly bent inward; but there is no possible good in the thickened cover edge, except to render this edge inextensible. This inextensibility of the edge is also increased by the presence of several thicknesses of canvas. The rim is also hollow; and to show that this was considered essential, we quote from the North British 1894 catalog the directions for detaching the tire:

"Deflate the air tube thoroughly and press the edges of the cover well down into the hollow of the rim opposite the valve tube, holding them in this position with the left hand. By working around the

rim with the right hand, and keeping the edges well in the hollow (as in the sketch), the edges of the cover go easily over the edges of the rim, when the fingers can be inserted and passed around until the whole cover is removed."

It is evident that the whole scheme is identical with that of the wired-on tire, except that the inextensibility of the cover edge is gained in a different way. In other words, there was no clincher idea involved, because the clincher tire hooks on.

The G. & J. Rim

At this time (1894-95) in the United States, the G. & J. tire, held on by hooking to the rim, was becoming very popular, and might have become more so, had it not been owned by the makers of the Rambler bicycle. The G. & J. bicycle tire and rim, as illustrated in Chapter II, were then made with a wood rim grooved to receive the double bead, and held on by these hooks, assisted by air pressure. When deflated, the cover could be pulled off by simply disengaging the hook beads, the cover edges being free to stretch, though there was no need of this, and no tendency to do so.

It has already been shown that the Bartlett tire and rim were patented in the United States, and that the G. & J. tire and rim were patented in Great Britain. The two rivals invaded each other's territory, sued each other for infringement, and each gained his suit. They accordingly combined ideas, blended them, and produced that famous hybrid, the real clincher rim.

The clincher rim is a simple steel channel with the flanges curled inward, forming a hook which catches a corresponding hook on the tire. Whether the tire be inflated or not, the cover cannot be taken off until the bead is disengaged from the rim clinch; and if the bead were inextensible, the tire could not be taken off at all. The principle is that of a hook, and nothing else; and though, through failure to recognize this fully, neither the hook on the rim nor the hook on the tire was made pronounced enough to hold the tire securely, the use of lugs with large tires remedied this defect. Lugs were troublesome, however, and an open admission that the clincher was not complete.

Mechanical Fastenings

Meanwhile there was developed another group of rims, which were commonly called the mechanical fasteners, though the term is rather awkward. These formed a class, including every kind of holdfast rim except the simple crescent or channel, and the various modi-

fications of the Dunlop and the clincher types. The inventions in this class were very many, indeed, both because the idea was peculiarly fascinating, and because the reward for success would be very great. Most of these ideas, however, never got beyond the patent office, and while many of the others attracted more or less capital, and

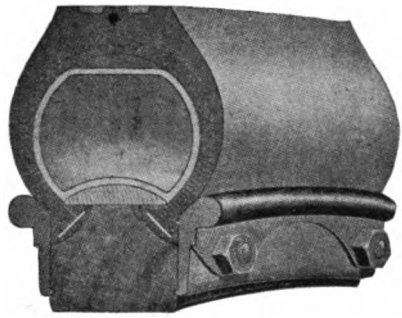

PALMER MECHANICAL FASTENING

several were actually marketed, the trade knew very few mechanical fastened tires, and some of these were misnamed. Nevertheless, this type had its merits. It had been found to be tolerably easy to make a tire stay on so long as it was blown tight, and more tires depended to some extent upon inflation, in order to fit well. The greatest trouble,

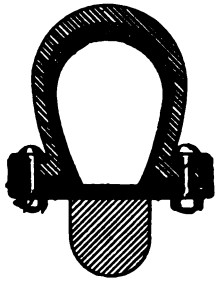

KOKOMO RIM AND FASTENER

INTERIOR FASTENING DEVICE

however, was experienced from running on loose tires, on account of the greatly increased tendency to creep or to blow off bodily. Running on a flat clincher is certain destruction to both tube and shoe, while the mechanically fastened type suffered much less, and sometimes only the tube was damaged.

The best known types of mechanical fastening were probably the Palmer, in England, and the Fisk, in America, the latter being illustrated in Chapter II. Each, however, was allied with the controllers of the clincher patents through force of necessity, owing to similarities in the general principle. Creeping and blowing off the rim were manifestly impossible; and though the through bolts were undoubtedly troublesome, it could hardly be said that the detachment of a clincher held by lugs was any less so. The use of lugs with clinchers was a concession to the principle of mechanical fastening; and so nearly universal did the use of lugs become that the detachable clincher flange was seriously handicapped by the practical impossibility of using lugs with this device.

The Fisk separable rim, as it was called, consisted of a steel band secured to the felloe of the wheel, and two rings that slipped over the beads of the tire and were held in place by clip bolts having heads shaped to grip the ring and the felloe band. The bolt passed through a channel in the bead and was threaded at the other end to receive a nut. This nut held in place another clip, which likewise gripped the felloe band and the other ring. Ten bolts were used for a 30-inch tire, more for larger sizes. To remove a tire from this rim, the nuts were removed, freeing the clips, which in turn allowed the rings to be removed. To replace, the rings were slipped in place and the clips inserted and drawn up tight by the nuts.

The Trend of Rim Design

Although most of them now have straight-side flanges, the demountable rims of today are well-nigh entirely an evolution of the clincher rim of solid construction which was substantially standardized some years ago.

Practical as was the mounting and unmounting of a clincher pneumatic when deflated, it was not an easy job. Patience had its limits. Out of the solid clincher rim, which was really the felloe of the wheel, were evolved the detachable and demountable rims of today. The demand for quick changes in racing were largely responsible for this, although the comfort of the motorist was also a big factor.

Logically, one of the first efforts to improve the clincher rim was to split it circumferentially so that the grip could be removed on one side by the withdrawal of a ring which held that section in place. This ring had a locking device consisting either of a turnbuckle or some other mechanical expedient. With this ring unlocked and de-

tached it was easy to withdraw the side of the clincher rim which was made to be removed, and then it was a comparatively easy matter to shove the deflated tire off or on. This, however, was not speedy enough, and to reduce the number of parts, a rim split crosswise which could be bodily withdrawn from the wheel, was the next step. About these two have centered all of the rims that have been produced in recent years.

The prime objection raised against split rims was that the full inflation of the pneumatic tire with its resultant compression or tension was at first counted upon to make the locking devices effective. Critics pointed out with reason that this was an element of weakness. The defect would betray itself just when the tire most needed to be gripped securely to avoid a serious mishap when a tire became partly deflated or suddenly blew out through one cause or another. It was perfectly clear that the safety of a rapidly running car depends largely upon the tire remaining in place, and that if the supporting rim yielded or slipped when the pneumatic was deflated, there was bound to be trouble.

Because of this, manufacturers soon developed improved locking devices of various sorts which were more or less effectually augmented by means of adjustable clamps held in place by screw bolts anchored in the wheel felloe.

The present aim of rim makers is to employ a felloe band forming one side of a rim-locking equipment with removable wedges or locking rings to complete the other side of the mechanism, thus steadying and supporting between them the clincher, detachable or demountable rim.

Demountable Clincher Rims

Tire changing on the road has always been the great bugbear of motoring, and this applies not only to the change itself but the inflation of the new tire as well. By carrying a spare tire inflated ready for use on an extra rim, no inflation is necessary, the tire change is simplified and repairs can be postponed until the end of the journey where facilities are better than the roadside affords. These are the factors which led to the development of the demountable rim held on to the felloe of the wheel by means of wedges or clamps secured by bolts and nuts.

Many think that the demountable rim principle is newer than it really is. As a matter of fact, the invention is much older than the use of it. The earliest to attract considerable attention was the Cave quick change rim, an English product. This did not have much sale,

however, on account of its fitness for racing, which has never been popular in England. In France, where racing assumed such prominence, the idea was taken up eagerly, as soon as it became known.

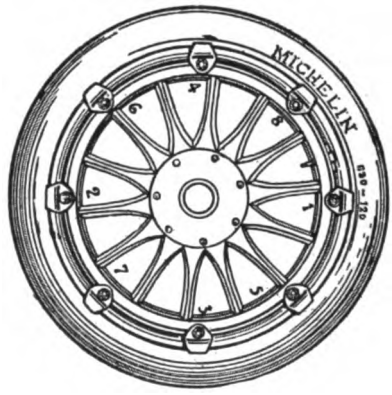

MICHELIN DEMOUNTABLE

The M. L. rim, the Michelin, Vinet, Lousteauneau, and Houdet types followed, all of them being substantially alike, and all intended for pneumatics.

In England, the Stepney spare wheel really embodied the essential principle, and this has been on the market for years. In Europe, detachable rims are much used for solid tires, on account of the revival of the vulcanized-on method of fastening tires. These tires are now vulcanized upon a steel band, and the whole slipped or forced over the regular wheel band. In the United States, the Christie rim did away with the felloe, the spokes fastening directly to the rim, upon which the tire is already mounted and inflated. In the Michelin rim, the felloe must be cut half through, in order to admit the valve stem, while in the Vinet rim a special valve is needed, which does not project below the rim.

The objects aimed at by the designers of demountable rims, in addition to compactness and light weight, have been simplicity of construction, small number and simplicity of parts, ease of removal, including freedom from liability to rust or stick fast, if left for long undisturbed, and reasonable first cost. These advantages are naturally claimed indiscriminately for all demountable rims.

Hundreds of rims have been invented, but for some time they failed to appeal to the motorist, who manifested a leaning towards the

quick detachable types. Ultimately, however, the labor and delay involved in pumping up tires on the road brought the demountable into its own and it is coming more and more into use.

The Michelin demountable rim seats upon a steel band secured to the felloe of the wheel. This band is bent at right angles over the outer side of the felloe and on the other side is bent upward to hold the rim. Eight wedge clamps inserted between the felloe band and the one-piece clincher rim hold the latter firmly in place, being secured by bolts passing through the felloe and secured to it on the inner side. The bolts have special shaped heads with a wood screw passing through the flange of each into the felloe to prevent turning. The nuts are turned by means of a brace socket wrench and must with the wedge clamps be entirely removed from the bolts in order to change rims and tires. By inserting the thin edge of a spur lever between the removable rim and the felloe band on the side opposite the valve stem and using a slight leverage the rim may be forced outward, lifted upward and taken off the wheel. To replace, the valve stem is first inserted through its hole in the felloe, the rest of the rim is then shoved into place, the clamps slipped on and the nuts tightened.

The Diamond bolted-on demountable rim (Marsh patent) had a steel band secured to the felloe of the wheel. This band had a narrow

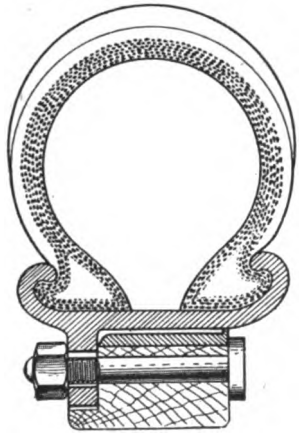

DIAMOND BOLTED-ON RIM

flange which was the only part of the band that the rim touched except the lugs. The one-piece clincher rim was formed with six lugs spaced at regular intervals around its circumference, and which fitted

into slots cut in the felloe and felloe band. Bolts pass through these lugs and the felloe and drawing up on the nuts with a brace socket wrench drew the lugs securely against the felloe and held the rim firmly to the wheel. On removal of the six nuts and two other nuts from a reinforcement strip where the felloe was recessed to admit the special short valve stem, the rim could easily be slipped off the wheel.

The later Diamond wedged-on demountable rim was much like the Michelin, although slightly modified. The tire rim was held in place by five or eight bolts of special design having square heads. That part of the bolt head resting on the felloe band was milled to fit the inside edge of this band and act as a locating clamp, while the lower

DIAMOND WEDGED-ON RIM

FIRST FIRESTONE DEMOUNTABLE

portion of the head was drilled and fixed to the felloe by a wood screw to prevent turning. Around the outside between the felloe band and one-piece removable clincher rim were located eight wedges not attached to the rim and held in position by nuts and lock washers on the bolts above mentioned. A reinforcement strip secured by two bolts and nuts bridged the recess in the felloe to admit the valve stem.

The first Firestone demountable rim was a standard one-piece clincher with six square attached blocks spaced equally around its inner circumference. These blocks fitted into channels cut in the felloe band of the wheel, thus preventing creeping. The felloe band had a small flange at each edge on which the rim rested, the area of

contact being small to reduce rusting and sticking to the minimum. By means of clips on both ends of six bolts through the felloe of the wheel the rim was prevented from slipping off sideways. To remove the rim, the nuts on these six bolts were loosened, freeing the excentrically mounted clips on the outside of the wheel, which were turned in the opposite direction and the nuts lightly drawn up to hold them in position. The rim was then easily slipped off, as the lugs and valve stem were flush with the inside of the rim. The valve was of the same type as that used with the Diamond rim. The inflated tire was slipped on, the clips were reversed and the nuts tightened.

A later type of the Firestone demountable rim, Type D, had a wedge ring, but was still of the separate clamp type, arranged so that

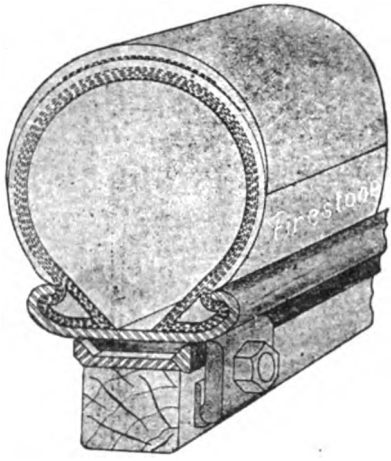

FIRESTONE DEMOUNTABLE RIM

the nut need not be taken entirely off the bolt. Each of the six clamps had a slot through which the bolt passed, and the lower end rested on the shoulder of a plate or stirrup fastened to the felloe. When the nut was loosened, the lower end of the clamp could be lifted from the shoulder, and would then drop down out of the way, allowing for the removal of first the wedge ring and then the rim.

The Fisk demountable rim was an adaptation of the wedged-on demountable principle to the Fisk mechanically fastened tire and rim. To the felloe of the wheel was fastened a hollow beveled ring which had a raised flange at the right for a support of the removable tire rim. The clamping device consisted of a beveled expanding ring fit-

ting between the beveled edge of the felloe band and the rim and held in place by five lock nuts applied to bolts through the felloe and clamping ring spaced at equal distances around the circumference. A dowel pin on the rim fitted into a hole in the felloe band to prevent creeping. The tire was fastened to the rim by the regular Fisk mechanical fastenings excepting the valve stem construction. The valve

FISK DEMOUNTABLE RIM

stem was in the form of an L, the valve cap projecting through the bead of the tire, allowing the rim to be removed without danger or injury to the valve.

The Vinet demountable rim was a one-piece clincher to be slipped in place over a fixed felloe band on the wheel, the band being flanged on the inner side only. The rim was held in place by a wedged clamping piece secured by a series of nuts on bolts through the felloe of the wheel.

The Continental adaptation of the Vinet rim included a felloe band flanged outward on its inner edge and inward on its outer edge. The inner flange received the clincher rim and the outer flange was fastened to the felloe by wood screws through it at regular intervals. The rim was of slightly larger diameter than the outer edge of the felloe band to allow the insertion of eight wedge clamps which held the rim in place. These clamps were secured by nuts on bolts passing through and secured to the felloe and prevented from turning by wood screws through the bolt heads into the felloe. To remove the rim, the

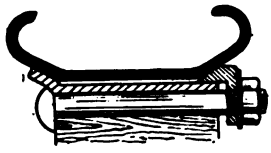

VINET DETACHABLE RIM

nuts and wedges were removed and the rim was then taken off by pulling off first the side opposite the valve stem and then lifting the latter out of the hole in the felloe.

The Harburg, afterwards the Crescent, demountable rim (Royce patent) had a beveled steel band secured to the felloe of the wheel. A special clincher rim was beveled to fit on both the inner and outer flanges of the felloe band. The rim was held in place by six hinged clips spaced at equal distances around the felloe and fastened to it with wood screws. These clips were drawn up by nuts on bolts passing through. Both felloe band and rim were galvanized and bronze nuts were used to prevent sticking due to rust. The rim was removed by burying the valve stem, preferably at the top, and removing the nuts, releasing the hinged clips, which could then be swung outward away from the rim. The rim was removed by pulling the lower part away first and releasing the valve stem by lifting up on it.

The felloe band of the Pennsylvania removable rim bore several countersinks and lock slots, which received corresponding offsets on the rim. In attaching, the rim was slipped on the felloe band and turned slightly, which moved the offsets into the lock slots. Two felloe bolts further secured the rim.

In the case of the Empire demountable rim the wooden felloe carried a steel band, which was flanged on the inner side of the wheel. The outside of the band was smooth, so that the continuous rim could be slipped off over it into place. To this band were riveted eight

L-shaped stirrups, extending down over the felloe. The bottom of each stirrup had a shoulder in which rested the end of a clamp which was held in place by a bolt passing through it and the felloe. When the nut was tight the rim was held between the flange of the band and the upper end of the clamp. The nut has a collar over which the clamp rested, so that a few turns loosened the nut sufficiently to allow the clamp to be turned sideways, permitting the rim to be slid off without removing the nut and clamp entirely from the bolt.

The Swinehart rim attachment was utilized for a spare tire and made it possible to attach a Swineheart cushion tire mounted on a clincher rim to any wheel without altering the original rim equipment. The same height of wheel was maintained as by the tire it replaced,

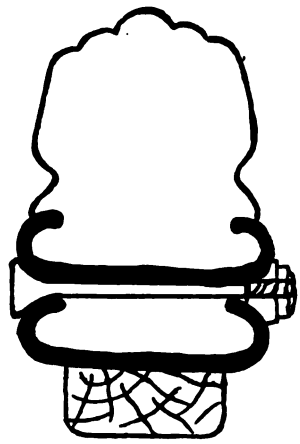

SWINEHART RIM ATTACHMENT

so that the cushion tire could be used with three pneumatics without changing the level of the car.

For the Nadall demountable rim the felloe was furnished with a flat steel band. Surrounding this with a clearance of one-eighth inch or less was a standard clincher or quick detachable rim. Several large keyways were milled in the rim. The felloe band was provided with suitable pockets in which these keys nested when the tire rim was to be removed. When the rim was in place the keys were forced into the corresponding keyways as tightly as need be by turning screw lugs which held the rim against any side play. It was held from creeping by two large pins, one on each side of the valve stem, which fitted in sockets in the inner rim.

The Dow demountable clincher rim consisted of a felloe band with a single stout flange on its inner edge. Riveted to its circumference at equal distance around it was a series of bronze wedges, slightly flanged on the front side and inclined both circumferentially and laterally. Similar wedges of malleable iron were riveted to the rim, their form being the reverse of that used for the other set. When the rim was brought into place over the wheel, therefore, the effect of any circumferential movement was to drive it firmly into place by forcing the wedge surfaces together.

The locking device of this rim was unique. Affixed to the inside of the rim at one point was a segmental plate, having a toothed rack formed in its front face. The corresponding fixture, which was attached to the felloe, had a plain bushed hole, into which was fitted the shank of the wrench used in applying the rim, which was characterized by a squared end, a round shank, and a small toothed pinion, formed midway of its length. As the wrench was slipped into the hole, the teeth of the pinion engaged the teeth of the rack on the rim, so that a partial turn of the wrench sufficed to draw up the wedges to their final position.

The second function of the locking arrangement was brought into action when the wrench was removed and its squared end inserted in a corresponding hole in a special eccentric bolt which was carried in the locking plate on the felloe. When this bolt was rotated by a little more than half a turn, its eccentricity served to throw radially outward a bolt having a toothed end, which engaged the teeth in the rack before mentioned, thus positively locking the two principal parts of the contrivance. The eccentric being thrown over into center by a very slight amount, any tendency of the bolt to work in toward the center of the wheel was resisted by the seating of the bolt in the cavity in which it worked. Any possible tendency of the bolt to rotate when the wrench had been removed was resisted by a flat spring, extending across the under side of the felloe, and engaging a flattened section of the flange on the front side.

The Younie demountable clincher rim differed from others in the shape of rim and felloe band, which were tapered laterally and overlapped considerably. The rim was held in place on the felloe band in part, by means of two radial dowel pins. In order to adapt any standard wheel to this rim it was necessary to turn the wheel in a lathe and impart to it the peculiar cone-like, tapering face corresponding to that of the felloe band. The rim was not wedged upon the wheel, but drawn up on the inclined bevel face of the felloe band

by bolts, making the whole contrivance extremely rigid. To remove the rim, the bolts were first removed, when the whole rim could be easily slipped off.

The Dorian, an early type of the collapsible rim, was in two halves which were hinged together and could be expanded until the tire was secured. The attachment to the wheel was made by means of wedges. The removal of four of these wedges, each of which were held by a single nut, allowed the removal of the rim.

DORIAN REMOVABLE RIM

The Howard demountable rim had a mechanism operated by turning a single bolt. An expansible and contractable felloe band made in two concentric parts held the rim to the wheel by friction, by lugs that prevent creeping, and by lock rivets devised to prevent slipping. To prevent creeping, four lugs were set in the tire rim, fitting into the felloe band on the wheel. One-half of the felloe band was one-eighth inch under size, while the other half was the actual inside diameter of the tire rim. The undersized part of the felloe band was composed of a series of interlocking wedges arranged in such a way that when the turnbuckle bolt was turned the inner movable section of

the felloe band crowded its wedges against those of the outer section, thereby expanding the whole band and pressing it forceably against the tire rim.

The Simplex demountable rims were of standard clincher type held in place by taper end bolts or set screws through the felloe secured by screw bushings or check nuts through which the bolts turned. Any type of rim could be arranged over at small expense.

The Detroit demountable rim is of the well-known wedged-on type, its unique feature being a special device to prevent creeping. This consists of a long narrow plate, with arrow-like ends, attached to the inner side of the rim, that seats between two V-shaped blocks attached to the felloe band at proper distances apart. The valve stem passes through the center of this arrow plate.

The Parsons detachable rim was fastened to the felloe by an arrangement of split wedges, of which half belong to the rim and half to the felloe band. In the original design these wedges were fixed to their respective members, but in a later design the wedges on the felloe were loose, affording an adjustment for variation in the diameter of the wheels which in no way interferes with the alinement of the tire.

The rim was centered against a flange on the felloe band and the lower wedges were drawn up to fit it.

Split Demountable Clincher Rims

The early demountable clincher rims and spare ready-inflated tires facilitated emergency tire changing on the road, but failed to make removal of the tire from the rim for repairs any easier. With a solid, one-piece clincher rim the tire beads must be flexible to permit stretching them over the clincher flanges. This stretching of the beads over the rim requires tire tools and is a difficult task even with automobile tires of small size. Tire changing with demountable clincher rims was considerably simplified by splitting the rim transversely at one point and providing some sort of locking mechanism to fasten the ends of the rim together before mounting the tire on the wheel.

With such a rim the opposite beads of the deflated tire could be pressed together, the rim contracted to a smaller diameter with a special tool and removed from the tire. It also made possible the use of quick detachable clincher tires with beads heavier, stiffer and stronger than the regular clincher beads because of their wire or cable base which permitted of no stretching.

The Midgley demountable clincher rim was a radical departure in the transversely split type with a locking device to fasten the ends together. Its main feature was an extremely flexible band upon which the tire was mounted. Transverse cuts across the face of the rim alternately from each side were the method by which the result was attained. The outer edges of this flexible rim were upturned, forming a groove with which contracting locking rings engaged. The side rings for holding this flexible band on the plain flat felloe band were expanded or contracted by a turnbolt connecting two dropped lugs at the point where the ring was split. This turnbolt could be turned by any ordinary wrench. The side rings, besides clamping the flexible rim to the wheel felloe, prevented it from any possibility of moving laterally by hooking with a bead into a depressed groove on the side of the flexible band. To remove the Midgley rim, it was only necessary to turn the turnbolt, which released the side rings. The flexible band with the tire could then be slipped off easily. To detach a deflated tire from this demountable rim, the locking device at the junction of the two ends was opened and the flexible band taken off.

The Universal demountable clincher rim was of the transversely split type. For application to the wheel, its ends were held apart about five-eighths of an inch, and when in position was locked on the wheel by the contraction of the rim, which was affected partly by the pressure of the air in the tire and partly by a locking latch mechanism placed at the joint of the rim opposite the valve stem hole. A recess was cut in the felloe band and the felloe of the wheel to receive the locking device, the felloe at this point being reinforced on one side by a bolted-on segmental plate. About three inches on either side of the valve stem were pins about one-quarter inch in diameter, which fitted into corresponding holes in the felloe band. Two similar pins were placed at about 120 degrees from this point. These pins, when the tire rim was contracted on the wheel, effectually prevented creeping and sidewise motion. Half a turn of a special tool locked or unlocked the latch mechanism of the rim.

The Baker demountable rim, made in both straight-side and clincher types, is a one-piece diagonally transversely-cut rim fastened by an anchor plate through a hole in the middle of which the valve stem passes. The rim is held on the wheel by means of wedges, bolts and nuts. Baker rims are made both with and without supporting studs according as the felloe band on the wheel is supplied with them or not. The anchor plate is attached to one end of the split rim and

at this end bears two blunt inwardly projecting pins. At the other end of the anchor plate are two holes through which two more pins on the corresponding end of the split rim fit when the rim is contracted. Thus the anchor plate bridges the split between the two ends of the rim and dowels them together. All four of the blunt inwardly projecting pins are long enough to enter holes in the felloe band and prevent creeping of the rim on the wheel. The rim clamps are mounted on the bolts, the only nuts being clamping nuts secured to the inner side of the felloe band. Removal of the clamp bolt assembly enables the rim to be removed from the wheel.

The latest type of the Baker demountable rim discards the wedged-on principle for the clamp, bolt and nut, the claim being that this fastening prevents distortion of either tire, rim or wheel, ensures automatic centering of the rim on the wheel and yields long tire life. The top of the clamp bears against a flange on the inner circumference of the rim near its outer edge, while the bottom of the clamp bears against a clamp plate on the edge of the wheel felloe.

The G. R. C. demountable rim is held against a tapered seat on the felloe band by means of a split locking ring that seats in a groove rolled in the outer edge of the felloe band. This locking ring is not removable, the groove in which it lies being of sufficient depth so that the locking ring can be retracted into it, thus permitting the rim to be withdrawn over it. When the rim is in place the ring is expanded, the increase in its circumference thus brought about serving to form it radially outward into engagement with the side of the groove and the outer beveled surface of the rim in such a way as to exert a powerful wedging action, thus locking the rim in place at all points.

The action of the ring is brought about by means of a screw-operated toggle arrangement worked with a ratchet wrench. Turning the screw in one direction draws the ends of the ring downward and together, reducing its circumference and retracting it into the groove. Turning it in the other direction forces the ends upward and apart against the rim, thus expanding it into complete engagement. This toggle arrangement is located diametrically opposite the tire valve on the wheel so that their weights counterbalance.

The rim itself is of the single piece, continuous channel, split type, either clincher or straight-side. It is split transversely at one point and the split is joined by a clip attached to the under side of the rim at one end of the split and having its free end upturned to engage a slot on the other end of the rim. Due to the positive relation of the felloe band and locking ring when the rim is in position on the wheel,

the ends of the split are firmly secured, making a smooth, secure joint. A special tool is provided to contract the rim for removal of the tire.

Straight-Side Split Demountable Rims

With the development of the straight-side tire of today, a modification of the early Dunlop-Welch type, the split demountable rim enabled a much easier tire change by contraction of the rim than had the clincher tire, and numerous straight-side split demountable rims appeared upon the market that are much used at the present time, being regular equipment on many leading makes of automobiles.

The C. W. C. demountable rim is a one-piece transversely split rim, straight side only, with locking device, held on the wheel by wedges, bolts and nuts virtually the same as the later Diamond demountable clincher rim, except that milling on the bolt prevents it from turning instead of a wood screw through the bolt head. A solid clincher rim in 30 by 3 1-2 size only is made with the same fastenings.

The Firestone Type E demountable rim is a one-piece transversely split straight-side rim, with a lock latch to secure the joint. A latch plate attached to one end of the rim spans the split and is held by a turn button operated by a screw driver which locks over a shoulder on the latch plate. Holes are drilled through the flanges near the ends of the rim for insertion of a rim contractor for removal of the tire. The rim is held on the wheel by a wedge or clamping ring, clamps, bolts and nuts exactly the same as the Type D demountable clincher rims already described.

The Goodrich demountable rim is a one-piece transversely split rim with a locking device consisting of an overlapping anchor plate and inwardly projecting pins penetrating the felloe band to prevent creeping, somewhat resembling the Baker rim. There are two types having two and three pins respectively and made for straight-side and clincher tires. The rims are fastened to the wheel with clamps, bolts and nuts.

The Jaxon standardized and Jaxon-Perlman rims are straight-side one-piece, transversely split rims with the two ends locked by a cam lock and key socket. The rims are held on the wheels by wedges, bolts and nuts. A solid one-piece clincher rim in 30 by 3 1-2 size only is made with the same fastenings.

The Detroit demountable rim is a one-piece, transversely split rim made in both straight-side and clincher types, fastened with a combination "cut-out section" and swivel locking device, and is held on the wheel by wedges, bolts and nuts. The swivel lock works on the turnbuckle principle. It is mounted on a short removable section of the rim

which facilitates contraction of the main body of the rim. The swivel is notched on opposite sides near its ends to engage studs on the inner side near the ends of the rim.

The Kelsey No. 30 demountable rim, made in both straight-side and clincher types is a one-piece transversely split rim with dovetail locking device. It is held on the wheel by wedges, bolts and nuts. The Kelsey No. 100 demountable rim, made for straight-side tires only, is similar, but has a ridge or positioning head on both edges of its inner circumference, a dowel traction pin engaging the felloe band to prevent creeping, and is held on the wheel by clamps instead of wedges.

With Kelsey steel-felloe wheels the Kelsey No. 110 or No. 115 rims are used according to size. Both are straight-side, one-piece, transversely split rims with dovetail locking device. The entire felloe is made of channel-shaped steel, beveled on the edges, serving in place of a combined wood felloe and steel felloe band. The rim, which is held on the wheel by bolts, clamps and nuts, has two beveled surfaces which fit against two corresponding bevels on the felloe.

The Stanweld demountable rim is a one-piece transversely split, straight-side or clincher rim, its ends fastened together with a cam lock and key socket. It is held on the wheel by wedges, bolts and nuts similar to those of the Continental (Gilbert type) rim, and is interchangeable with that rim. The wedge and nut are assembled, however, and not separable. A solid, one-piece clincher rim in 30 by 3 1-2 size only is made with the same fastenings. A special straight-side rim in 32 by 3 1-2 size only, similar but not interchangeable with other Stanweld rims is made exclusively for the Dodge Bros. car. The Stanweld standardized rim No. 76 conforms to recently adopted rim standards. It is a one-piece transversely cut straight-side rim with cam-latch locking device held on the wheel with bolts and self-contained wedge-nuts, the parts being assembled and not separate. The valve stem hole is placed safely away from the transverse cut, preventing injury to the valve stem as the rim is manipulated.

In the construction of the Standard Universal demountable rim the salient features of the Baker and the old Stanweld No. 21 have been combined in a composite rim that is said to possess all the advantages and none of the faults of the original types from which they are derived. The rim is split on the diagonal and the locking device consists of a clip, one end of which is mortised and riveted to one end of the split rim, the other end engaging a slot provided in the opposite or free end of the rim. A small latch pivoted on the inside of the free end of the rim securely locks the ends of the rim together.

The rim is attached to the wheel-felloe by six wedges, the construction of which permits their use on all sizes of rims and provides for variations due to wear. The salient feature of the wedge construction is the arc-shaped front, affording a self-adjusting feature whereby the pull of the nut is direct, regardless of the degree of insertion of the wedge between rim and band. This advantage holds also in the event of a bolt having become bent out of line through accident. It also has the advantage that it is applicable to all wheels carrying Baker felloe-bands made since the year 1910. It is made in all sizes, including the new standard 33 by 4 size.

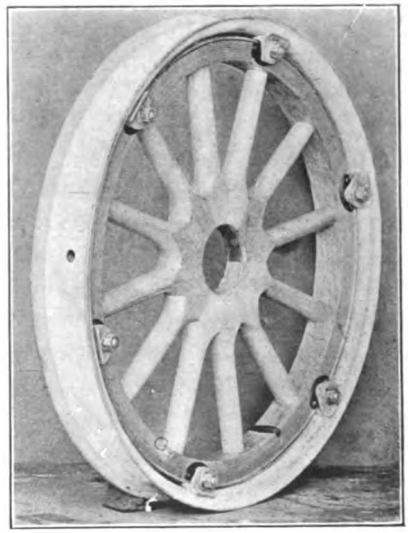

STANDARD UNIVERSAL DEMOUNTABLE

The Presto split demountable rim for either straight-side or clincher tires is held on the wheel by a contracting locking ring which fits into a channel in the outer edge of the felloe band, forming a continuous bearing between the rim and the felloe band that prevents rusting and squeaking. For removal of the rim from the wheel, the locking ring is expanded by a lever attached to it that snaps back against the felloe of the wheel when not in use. The ring is then easily removed, followed by the rim. No bolts, nuts or tools are required.

An ingenious development of the transversely split demountable rim is exemplified by the "Jiffy" collapsible rim. It has a collapsible section about fourteen inches in length in two halves operating on a

toggle joint, rust-proof, with no springs or hinges to get out of order. The rim is collapsed simply by dropping on the floor or road. No tools are necessary. Upon placing the collapsed rim within the tire, the rim is expanded into closed position by foot pressure on the toggle, which pushes out the collapsed halves and leaves them in proper place

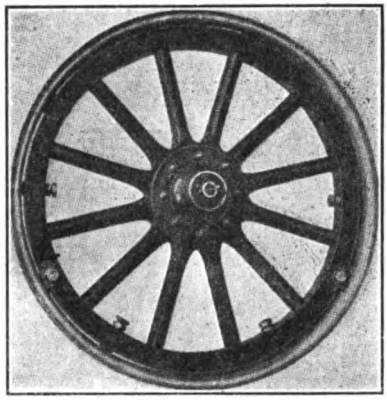

PARKER DEMOUNTABLE RIM

with the tire snug and tight upon the rim. The Amasco is another rim of similar construction.

The Parker demountable rim is of standard straight-side or clincher channel and may be of solid one-piece construction, or transversely split. It is unique chiefly in the fastenings provided to secure it to the wheel felloe. These consist of four simple bolts and two

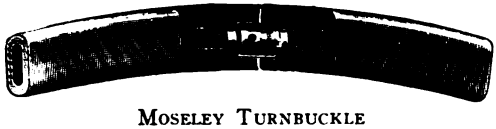

MOSELEY TURNBUCKLE

clamps, the former exerting a radial and the latter a lateral pressure. Dowel pins are provided on the rim opposite the locking devices to take the thrust of the drive.

QUICK DETACHABLE RIMS

The detachable flange idea seems to have grown up in Great Britain, developing from the wired-on fastening. It was not applied first to the flange, however, but to the holding wires themselves. The

Welch patent required a tire cover with edges made inextensible by some means, generally by the insertion of an endless wire. In order to attach or detach this cover, it was necessary to have a hollow rim. This gave some trouble, however, so the makers of the Scottish tire equipped their covers with tires whose circumference could be regulated by means of the turnbuckle principle, the ends of the wires being con-

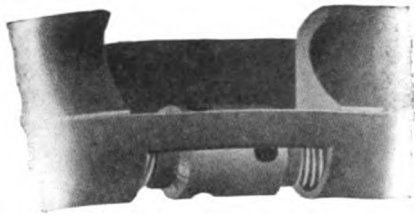

FORD UNIVERSAL RIM—THE TURNBUCKLE

PETER'S UNION FASTENING

nected by a screw with right and left threads. They were thus enabled to make their rims flat bottomed. Welch had himeslf suggested the use of turnbuckles on his wires.

This was a very clever idea, and had only one fault—the effects of the water which entered through the opening in the cover edge.

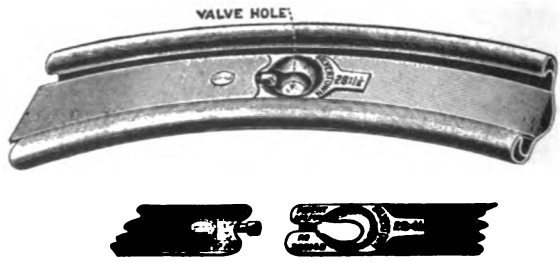

SILVERTOWN STEEL RIM TAPE FASTENING

The idea was kept in mind however, until the rise of the motor car threatened the extinction of the wired-on principle. The turnbuckle idea was then applied to the flanges, instead of the holding wires, and this improvement immediately restored the wired-on type to popular favor. Not only that, but it set in motion a train of thought that resulted in untold inventions. It was the quick detachable type of

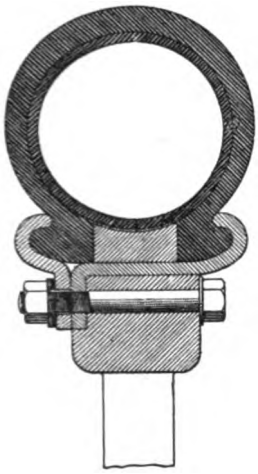

DE LASKI RIM

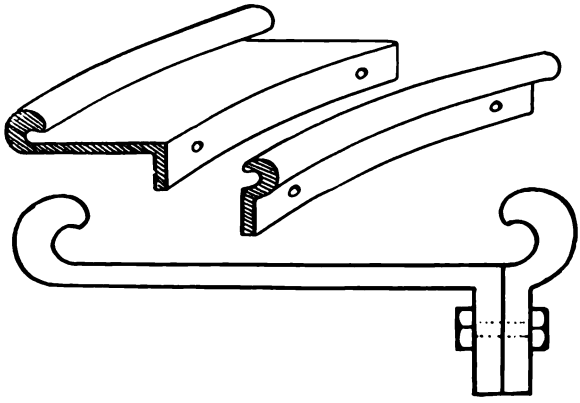

BERLIN-FRANKFURTER RIM

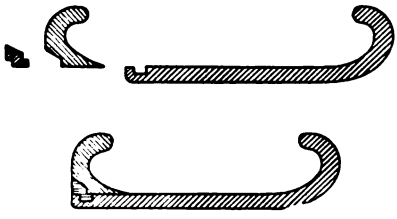

BRYANT RIM

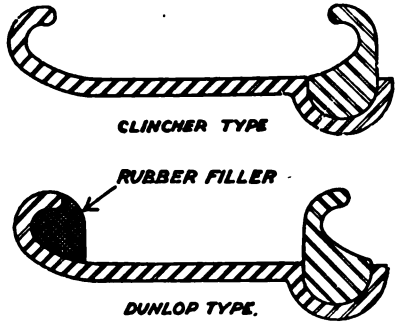

MIDGLEY RIM

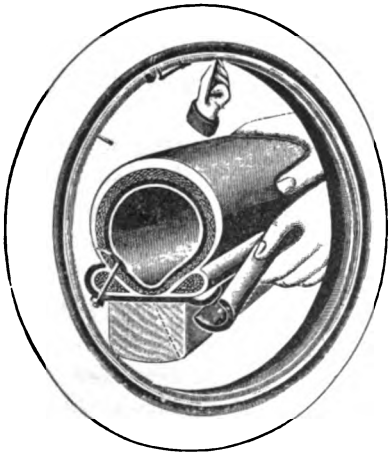

PADGET DETACHABLE RIM

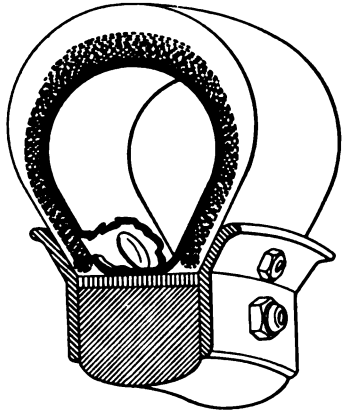

PALMER RIM AND FASTENING

rim which brought forth the quick detachable clincher tire. Its beads were heavier, stiffer and stronger than the regular clincher tire beads because of a wire or cable instead of a rubber core that permitted of no stretching and so made it impossible of use on an unsplit, flat-base, regular clincher rim. In the case of solids, the invention of the side-wire principle temporarily restored the rigid channel; but the wire mesh base, the grid, and the vulcanized-on holdings again turned the tide toward the detachable flange channel.

The first Midgley rim had two detachable beads, making the two sides of the rim alike. A later type, known as the Midgley Universal, was the old rim rolled out of a solid piece of steel and necessitated the use of but one detachable bead, which fitted in the groove on the outer edge of the rim. When this bead was fitted with the clincher side in, the rim took any standard make of clincher tire and by simply reversing the bead and fitting a rubber filler in the permanent clinch on the rim, a Dunlop tire could be used, as the filler was so made as to fit in the clinch and exactly correspond to the straight edge of the detachable ring which accommodates the Dunlop tire.

The two illustrations on page 811 show (1) the Midgley rim, designed for the clincher type of tire and (2) the same rim designed for Dunlop tires, the latter having a rubber filler in the clinch on the left. The inside dimensions of the Midgley universal rim and the width at the tire seat were exactly the same as the standard clincher dimensions.

The detachable bead or locking ring was locked or drawn together by a turnbuckle provided with right and left-hand threads and turned by means of a spiral gear meshing with the gear integral with the threaded shaft. By the use of a special crank provided for the purpose the turnbuckle was turned, thus separating or drawing together the two ends of the ring as desired.

To remove a tire, the two ends of the locking ring were separated by the turnbuckle until the side opposite could be pulled out of the groove. The ring was then lifted up to remove the turnbuckle and the shoe slipped off. To replace the ring, the turnbuckle was first inserted in the socket, the rest of the ring shoved into place and the two ends drawn together until the ring was tight in its groove. As the turnbuckle was practically irreversible with respect to the separating tendency of the ends of the ring it could not work loose.

The Marsh (Diamond) rim was secured to the felloe of the wheel and had two removable clincher flange rings on opposite sides held in place by an internal expanding lock ring on the outer side of the rim.

This ring was locked by an ovel wedge on a spring clip which rested in an oval shaped slot cut in the locking ring. To remove the ring, the wedge on the clip was first sprung out, and the right-hand end of the locking ring sprung downward and past the other end, which released the locking ring. The flange ring could then be removed and also the tire. To replace, the flange ring was slipped back into position and one end of the locking ring started. The rest of the ring was then expanded to place and the wedge snapped into its seat.

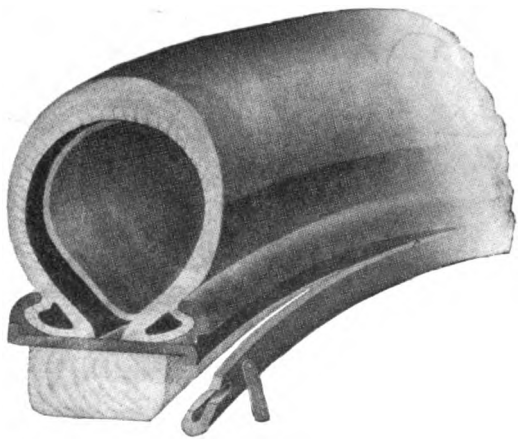

DIAMOND-MARSH RIM

The Goodrich rim was secured to the felloe of the wheel and had one detachable clincher flange ring with which was incorporated a locking device. At each end of the ring was formed a hooked lug integral with it, which hooked into a slot in the edge of the rim and locked there. The left-hand lug was first slipped into the outside part of the slot and drawn to the left until the hook engaged with the rim, and a dowel pin in the rim was centered with a hole in the flange ring, which insured locking. The rest of the flange ring was shoved into place and with a special tool with pins, engaging with holes near the two ends of the flange ring, the right-hand end of the ring was drawn up until its lug could be slipped into the inside half of the slot in the rim. The ring was then drawn together and the right-hand lug drawn outward until the two lugs are in the same outside slot, when the ring is locked. The right-hand lug could slip back into the other half of the slot and thus come off, because a clip on the valve stem spread the beads of the tire apart and held the locking lugs into

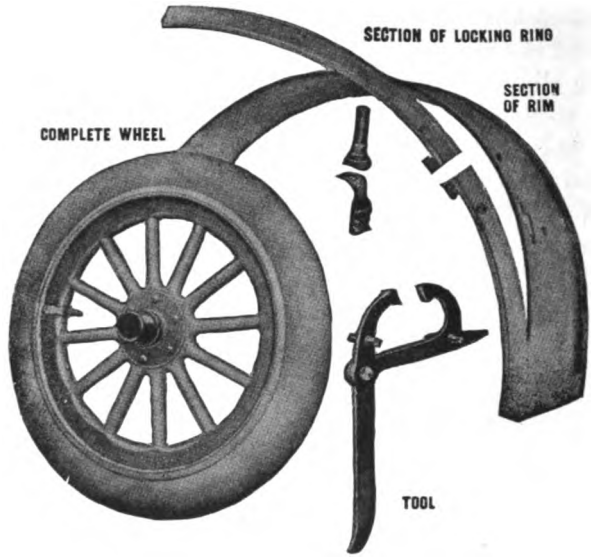

GOODRICH QUICK DETACHABLE RIM

the outside half of the slot. To remove a tire, the dust cap on the valve stem was loosened, which released the clip. The beads were then free and the right-hand end of the flange ring was shoved in until its lug released, when the ring could be pried out and the tire removed.

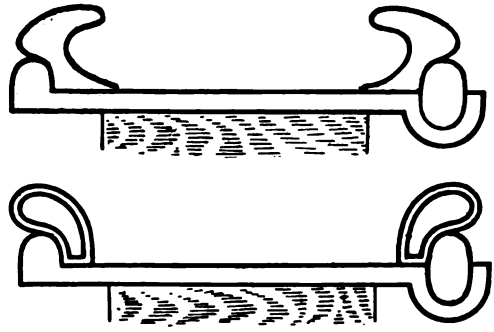

GOODYEAR CLINCHER AND STRAIGHT-SIDE UNIVERSAL

The Goodyear universal rim was adapted for use with either clincher or straight-side detachable tires, by the special shape of the two removable flange rings which permitted of reversal for the particular type used. The rim was secured to the felloe of the wheel.

The locking device was a contracting ring, the normal diameter of which was that of its groove, and it was held in place by its contraction and the pressure of the shoe against the adjacent flange ring.

To remove the locking ring, one end of it was pried out of the groove, when the rest of the ring could be worked out, releasing the flange ring which could then be removed. To replace the ring, the reverse operation was performed, the locking ring being simply sprung into place.

Later a light-weight two-piece quick detachable Goodyear rim was brought out for straight-side tires. It has only one split detachable ring which acts both as a locking ring and supporting flange. The ring is contracting and lifts right out of the channel in the rim, a square hole being left at one end for insertion of a screw driver or other convenient tool.

The Firestone universal rim was constructed with two sets of rings for use with clincher or straight-side detachable tires as de-

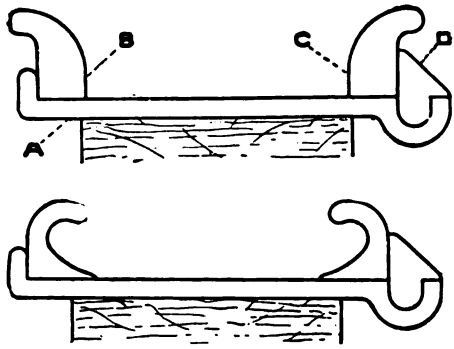

FIRESTONE SAFETY UNIVERSAL RIM

sired. The rim was attached to the felloe of the wheel, and two removable flange rings were held in place by a split contracting locking ring. The outside flange ring was fitted with two pins fitting into holes in the locking ring. The ring was locked by drawing together the two ends by a special tool with pins engaging holes beyond those already mentioned, until the pins in the flange ring slipped into the holes intended for them in the locking ring, the holes and pins being in register with the holes when the two ends of the ring were drawn together.

By the use of a lug or spreader on the valve stem the tire was forced against the flange rings, which in turn prevented the locking

ring from jumping off from the pins. The locking ring was then secured. To remove, the spreader on the valve stem was released, which permitted the flange ring to be pressed inwards until its pins released the two ends of the locking ring. The latter was then easily removed, releasing the flange ring, when the shoe was readily taken off. To replace, it was necessary to have the two ends of the locking ring at the valve stem. The flange ring was replaced and the locking ring sprung into place and drawn together. The lug on the valve stem was then drawn up and the locking ring secured.

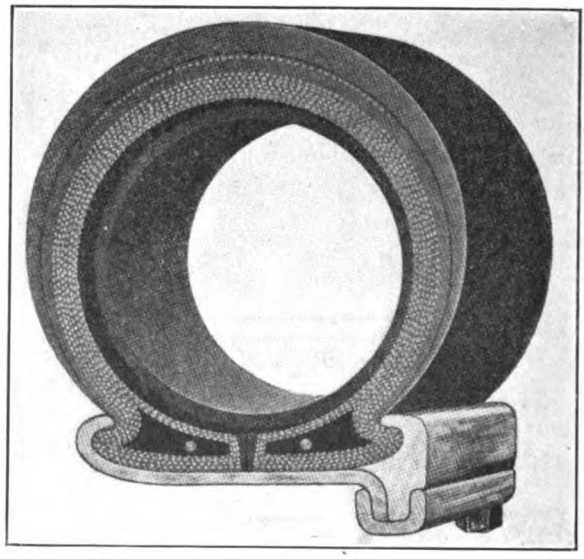

"Republic" Detachable Tire and Rim

The Stanweld series 50 rims were universal detachable. The No. 50 rim had two removable side rings, reversible for either straight-side or clincher tires. The No. 51 and No. 52 rims had back flanges integral with the solid rim base, the outer flange only being detachable. The No. 51 rim was for straight-side tires and the No. 52 for clinchers. The detachable, transversely split flange ring fitted into a groove in the outer edge of the rim base and was held in place by means of a small interlocking wedge piece fitting between the ends of the flange ring and protruding its button-like lower edge through a hole in the rim base where it was locked securely by a latch hook.

The Republic rim was fastened to the felloe of the wheel and had one removable flange ring held in place by an internal expanding

locking ring which fitted over the turned down edge of the rim and the heel of the removable flange and was locked in position by a wedge-shaped key piece fastened by a bolt screwed into the flange ring. To remove a tire, the bolt was first removed, freeing the wedge. This in turn was removed and the two ends of the locking ring were sprung together and the ring removed, freeing the flange ring. To replace, the operations were reversed.

The Parker rim was secured to the felloe of the wheel and had one removable flange ring held in place by ten bolts screwed into lugs set into the felloe of the wheel at intervals and riveted to the rim. To remove a tire, the bolts were removed, freeing the flange ring. To replace, the ring was slipped on and the bolts drawn up.

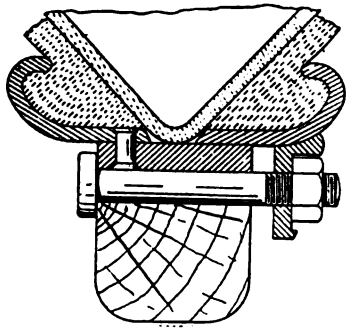

THE PARKER RIM

The Turner detachable flange ring consisted of three pieces, a fixed rim provided with a detachable clinch which was held in place solely by means of a round split steel locking ring sprung into a groove formed for its reception on an extension of the rim. The inflation of the tire and the pressure of the security bolts were relied upon to keep the loose clinch held up against its locking ring.

The Ajax-Grieb detachable flange was slotted underneath, as was also the flat rim. An easily detached split locking ring filled corresponding slots on the tongue and double groove principle.

The detachable flange of the Trident rim had an offset underneath which was engaged by felloe bolts with square washers.

Half of the Long & Mann detachable rim was fast while the other half was held on by through bolts, and also by offsets underneath, which fitted into tangential slots in the felloe band.

The National quick detachable rim was provided with one stationary flange on the inner side. The rim was broader than the ordinary

type to accommodate the locking device, which consisted of ten springs bearing double bolts which protruded through holes made for their reception in the rim. A single pivot attached the bolt bearing spring to the rim, so that when the bolts were withdrawn from the corresponding slots the spring could be slightly turned with the rivet as a pivot and the bolts prevented from re-entering the slots until all adjustments had been made. The rim which slipped over the rim and caught the outer tire bead was made solid. When the bolts had been withdrawn the ring could easily be slipped on or off the rim. When in place, the springs were turned until the bolts were in position to re-enter the slots, when they were released. The bolts protruded through the slots and prevented the ring from slipping off.

The E-Z is a quick detachable rim intended to replace the clincher rims on Ford and other small cars. It is of the split type, with the outer part held in position by six bolts passing through the wheel felloe. Upon removing the nuts, the tire and flange ring may be slid off in one operation.

The Westbury rim has been brought out by the Goodrich company to meet a peculiar condition existing in England. Clincher tires are the rule there, and are chiefly stocked by tire dealers, but American cars equipped with straight-side tires are coming into the country rapidly. The Westbury rim accommodates both types of tires. The rim consists of three parts. First there is a cylindrical metal ring, which has approximately the same width as the felloe and which forms the base of the rim proper. It is secured in position on the felloe by screws or other means to present a flush outer surface to the rim. A flange or plate is provided for each side of the wheel, having a section for accommodating the tire and of sufficient breadth to abut against the side of the felloe and also against the edge of the cylindrical ring. The flanges are held in position by a number of bolts passing transversely through the felloes at equal intervals around the wheel and are secured by suitable bolts and nuts. The shape of these flanges is such that they accommodate tires of the beaded edge variety, and when reversed are suitable for tires of the straight-side type. To remove the tire, all that is necessary is to unscrew the nuts which hold the side plate or flange. The plate or flange can then be detached and the tire easily removed, the opposite plate or flange remaining in position. In a modified form the cylindrical portion of the rim is provided with a radial projection or bead extending completely around the rim. This ledge forms a recess against which a shaped ring having the desired section, viz. to take tires of the beaded edge or

straight-side types, can be slid. On the opposite side of the felloe is an annular ring to co-act with the second bead of the tire. This annular ring, which is adaptable for both types of tire, may be secured in position by any usual method.

An interesting and comparatively recent American adaptation of the detachable flange is a feature of Disteel wheels, now much used on large cars. The outer flange of the tire rim of this wheel consists of a removable annular ring held in place by eleven simple bolts. There are no wedges or clamps. This side ring will drop off on the removal of the last nut and the tire may then be taken out without tools of any sort. A spare tire is carried inflated ready for use on an extra wheel which is fastened to the hub by means of a hub flange secured by four flange nuts. The same brace socket wrench fits both sets of nuts.

Quick Detachable Rims for Wire Wheels

Wire wheels for motorcycles have always had clincher rims for tires, and the same was true of the early wire wheels of larger size for automobiles. The detachable flange principle of rim construction lent itself readily to these larger wheels, however, and was particularly desirable because in a wire wheel the rim proper also serves as the felloe.

One of the earliest quick detachable rims for wire wheels was the Houk used on Rudge-Whitworth wheels. It consists of only two pieces, the rim proper and the detachable ring, both made from the same weight and grade of material. The ring is split at one point in its circumference and requires no bolts, clips or nuts to hold it in place. It slips into the groove of the rim and is held in position only by pressure from the tire. A special tool is provided for removing the ring from its groove, after which one side of the tire is left free and unobstructed to be taken from the rim.

The F. & H. wire wheel rim is in two types for clincher and straight-side tires. Both have a deep channel on the detachable ring side that not only gives the rim additional strength at this point, but makes an ideal seat for the spoke nipples and permits getting a much greater angle to the inside row of spokes than would be the case were it necessary to lace to a point inside the detachable band. This greater angle increases the wheel's strength.

The McCue quick detachable rim for wire wheels has a perfectly flat and smooth portion against which the tire rests, avoiding corners or projections that might cut or pinch the tire or tube. The grooves in which the outer ends of the wire spokes are attached are pressed in

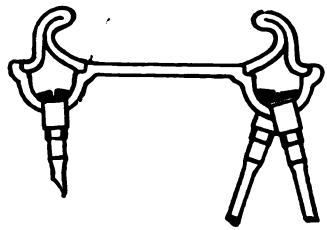

McCue Wire Wheel Q. D. Rim

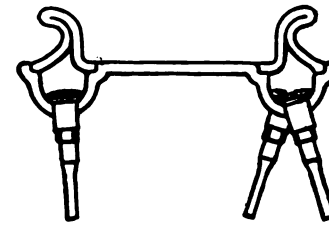

Showing the Flanges Reversed

the rim, which allows this part to be made integral with the body of the rim and at the same time to add strength to the wheel. The flange portions are reversible in order to accommodate either clincher or straight-side tires.

Quick Detachable Demountable Rims for Wire Wheels

The popularity of the demountable rim, which avoids the inflation nuisance of tire changes on the road, quickly led to its adoption for wire wheels, but other fastenings than those of the wedged-on and bolted-on types of rims had to be devised because of the different character of the felloe of the wire wheel, which was itself but a rim of steel, and had hitherto performed the functions of wheel support and tire retainer.

With the Ashley wire wheel a few turns of a special ratchet wrench applied to a nut, and the rim may be lifted off the wheel, the reverse process of applying the rim to the wheel being equally simple. The means of fastening the rim to the felloe consists of a locking ring, which is expanded or contracted by a nut working on a bolt. The ring floats in a channel save where fastened to the bolt, and securely locks the rim when expanded by fitting in a channel in rim and felloe band. The rim, when demounted, has the Universal removable flanges or bead rings so that the tire may be readily detached. The rings are reversible for use with either clincher or straight-side tires.

The Spranger wire wheel may be used in connection with any standard quick detachable demountable rim, the latter being fitted at three points on its inside circumference with pairs of blocks forming part of the locking device. Two notches are cut on the outer side of the wire wheel channel to permit the blocks on the rim to enter. The ends of these blocks are so shaped that when the wedges of the fastening devices on the wheel drive the dogs outward, these dogs engage the

blocks so that the rim and tire cannot move. The wedging action of the securing device is held by means of its traveling on the thread of the bolt, which is turned by a suitable brace or handle.

The Copithorn wire wheel has a three-piece collapsible base rim that seats on the wheel felloe. This rim is fitted with quick detachable rings which take either clincher or straight-side tires. The rim is held on by an outer ring which has lugs cut at an angle of 45 degrees to the circumference, these lugs engaging in corresponding sockets in the felloe. This last ring is secured by a locking lever, requiring but a single operation to release or secure the tire rim. When the lever is pulled up, it draws the outer ring out of the socket in the felloe. The valve stem nut is square on one end and conical on the other. The square end fits into the wheel felloe, preventing creeping, and the conical end fits into a socket in the base rim, after the tire is applied, locking the whole together.

Quick Detachable Demountable Rims

The obvious convenience of the demountable rim to facilitate emergency tire changing on the road, and of the detachable flange in removing the tire from the rim for repairs, soon led to a combination

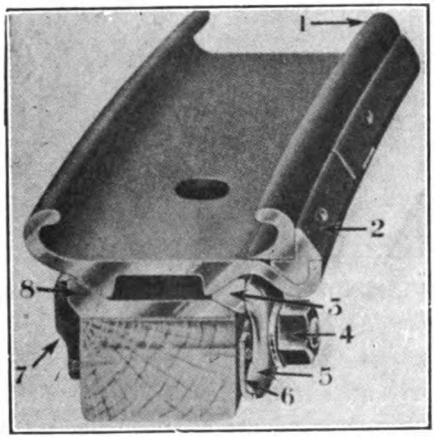

Firestone Quick Detachable Clincher

of the two principles, known as the quick detachable demountable rim, which varied considerably in design as manufactured by various companies.

The type B Firestone quick detachable demountable rim was a combination of the earlier Firestone universal quick detachable rim

and the Firestone Type D demountable rim. Its two reversible side rings accommodated either clincher or straight-side tires, the outer side ring being held in place and also made readily removable by a split locking ring seating in a channel along the outer edge of the rim base and also bearing on the under side of the side ring. Thus the locking ring could not possibly turn over in its groove, and its high upward projection brought a strong support to the back of the side ring. Pins on opposite sides of the split in the locking ring engaged slots in the side ring, forming a guide that ensured proper seating of the locking ring and also prevented circumferential motion. The rim was secured to the felloe by means of a clamping ring, clamps, bolts and nuts. The Type A rim for clincher tires only differed in having the inner flange a fixed part of the rim base, while the Type C rim was of similar construction for straight-side tires only. Wedge clamps were used in the smaller sizes instead of the clamping ring for fastening Type A rims to wheels.

The Continental quick detachable demountable rim, (Gilbert type) was one of the first practical rims of this sort offered to motor-

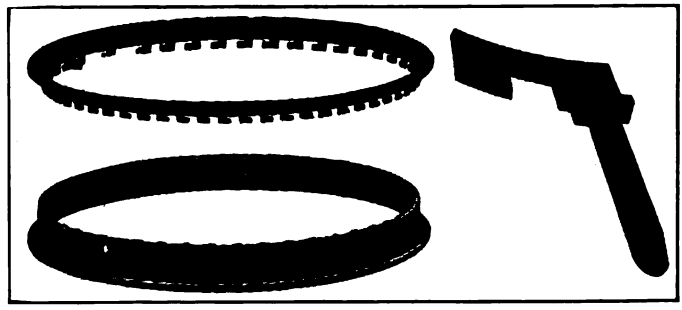

GILBERT TYPE CONTINENTAL DETACHABLE DEMOUNTABLE

ists of this country. Because of its distinct advantages over the plain clincher rim, it early attained great popularity. Although, in time, many improvements were made to the Continental rim, the design of the felloe-band remained the same. The first type of improved rim-base and locking system, known as the No. 3 rim, is here illustrated, and the method of securing and releasing the locking elements is easily understood. The rim was split circumferentially and the two parts were fastened together by a series of interlocking hooks and lugs. A special tool was furnished, and this provided sufficient leverage to overcome the friction of circumferential movement of the sections.

The Continental rim was adapted for clincher, quick demountable and Dunlop tires. Its removal from the wheel was affected by extracting four of the eight wedges that secured it, and inserting a hinged tool. The rim seated upon a flanged band shrunk on the felloe of the wheel and was held in place by a series of eight clamps with wedge-shaped projections, which entered between the felloe band and the rim. The rim was prevented from slipping back and forth on the felloe by projections on its under side, which rested in recesses in the felloe. Bolts passing through the clamps and the felloe held the tire in place.

Later the No. 30 Continental rim was brought out. This second rim was split circumferentially. Both sections had a series of corresponding lugs which fitted into the slots of two semi-circular spring rings. One end of each ring was riveted to one section of the rim base. Because the circumferential movement was thus avoided, the fear of freezing and rusting was removed so far as it might effect the operation of the rim, and at the same time the need of a special tool was obviated. It is said that this rim is easier and quicker to detach and, at the same time, facilitates access to the tube.

The Kintz rim had a circumferential groove in which a split outer flange ring was secured by means of dowel pins fitting into recesses in the groove. At a point near the split in the ring one of the dowel pins was tapped to receive a screw. The dowel pin on the opposite side of the split was undercut to secure that end of the ring. A band, slotted for lightness except where four or six securing bolts pierced it, was riveted to the inner circumference of the clincher rim. This band seated the rim on the flat felloe band of the wheel, and it was secured by four or six taper bolts threaded through the felloe, felloe band and rim band into taper holes in the rim proper. To remove the rim, it was necessary only to partially remove the taper bolts. To remove the tire from the rim, the screw locking the split flange ring was removed and the ring taken off.

The Johns-Manville rim consists essentially of two bands, each of which carries one of the raised beads which hold the tire in place. One, the main tire-carrying section, is a continuous unbroken ring, while the other is split diagonally and slips inside the solid rim, where it is retained by dowels projecting from the under side of the main ring and engaging in depressions formed in the split ring. In mounting a tire the main ring is laid flat on the floor, the tire slipped on, the split ring entered with the dowels matched up with the depressions and pressed into place with the foot, when the dowels and

tongue snap into place and the rim and tire are ready to mount on the wheel, where five simple clamps with bolts and nuts hold them securely in place.

The Goodyear-Doolittle rim, one of the early types, had an expansible base, side flanges, contracting and expanding screws, telescoping housings, etc., and was worked by a simple ratchet wrench.

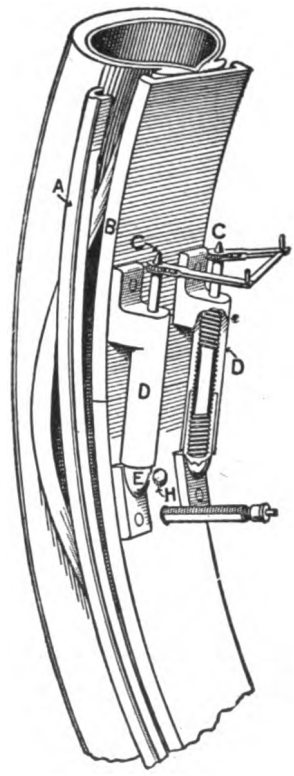

GOODYEAR-DOOLITTLE RIM

The many types of rims made the desirability of their standardization apparent at an early stage, and the Standard Rim Co., later dissolved, was one of the fruits of this need.

Although tire manufacturers generally had long recognized the necessity for standardization, not one of them controlled sufficient patents to produce a rim that would interchangeably take all makes of both straight and clincher tires and at the same time provide for quick detaching and demounting. Various ideas were followed up, but it

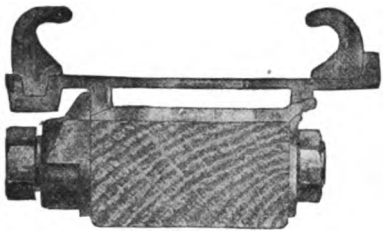

Type 1—For all Straight Side and Clincher Tires. (Clamp Locked)

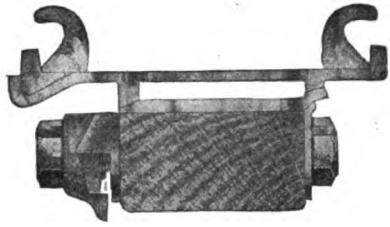

Type 2—For all Straight Side and Clincher Tires. (Clamp Unlocked)

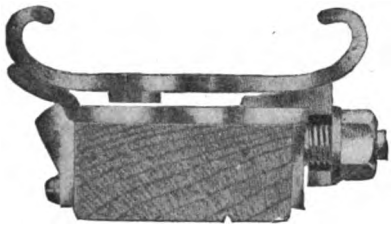

Type 3—For all Clincher Tires (Wedge in Position)

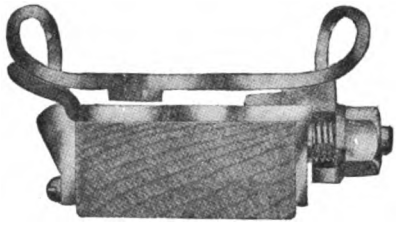

Type 3—For all Straight Side Tires (Wedge in Position)

UNITED RIM CO., DEMOUNTABLE, DETACHABLE

was found that none of them were practicable without including some of the technical or mechanical principles embodied in other rims which were covered by patents.

Finally certain important tire manufacturers who had been responsible for a large proportion of the rims heretofore made, transferred to the United Rim Co. all of their rim patents, together with engineering data and other information that would render possible the establishment of a uniformed standard. By eliminating all features of negative value that prevented interchangeability and making the rims conform at the same time to the best of established engineering principles, the standardization thus effected resulted in the adoption of three rims. They fitted all straight-side and clincher tires and also embodied efficient means for detaching the tire from the rim and for demounting the rim from the wheel. As adopted, these rims embraced the good points of the Goodyear, Diamond (Marsh), Continental (Gilbert), and Goodrich types, with the addition of such new features as had been demonstrated to be of value.

The Perlman quick detachable demountable rim, patented in 1913, seated on a flanged felloe band and was held on the wheel by four taper-end bolts threaded through the felloe and felloe band, the tapered ends engaging tapered holes in the rim. The rim consisted of two annular unsplit, concentric sections, each bearing at its outer

edge one of the clincher flanges. Each of the sections was cut away for a portion of its thickness, forming an annular shoulder, and one of the sections overlapped the other for the width of the cut-away portion with the free edge of each lapping portion engaging the shoulder of the other portion. At intervals about the circumference the two sections were secured together by machine screws extending from the inside through the inner section and threaded into the outer section, thus rendering the sections easily separable for removal of the tire.

The Goodyear No-Rim-Cut detachable demountable rim for straight-side tires permits the tire to widen out at the base and rest in natural position, providing greater air space and insuring the sidewalls against excessive strain through having the beads pinched together. The flanges are high and of suitable contour to give proper

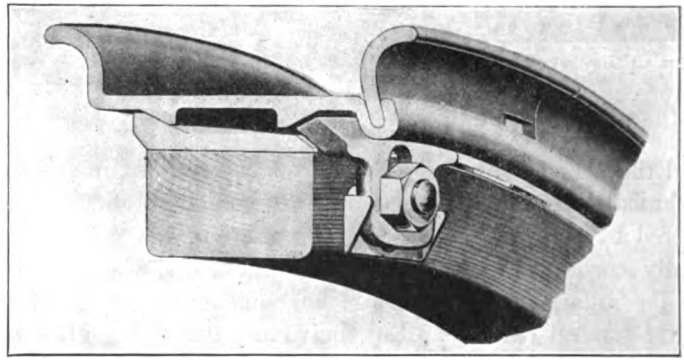

GOODYEAR NO-RIM-CUT DETACHABLE DEMOUNTABLE RIM

support to the tire. It is a two-piece rim, there being only one detachable ring which answers the purpose of a combination supporting flange and locking ring. Wedge clamps, bolts and nuts hold the rim to the wheel. It is claimed to be the lightest detachable demountable rim on the market. This is the Type A rim. The Type B is of heavier construction held to the wheel by a wedge ring, clamps, bolts and nuts.

For heavy cars the Goodyear Ideal rim is made. This is the Goodyear universal detachable rim, already described, made demountable. This rim has flange and locking rings and the whole is secured to the wheel by means of a wedge ring, clamps, bolts and nuts.

The Gilbert detachable demountable rim was assigned one-half to The B. F. Goodrich Co., one-fourth to the Goodyear Tire & Rubber

Co., and one-fourth to the United States Tire Co. This rim is so constructed as to make it impossible to assemble the parts and place the tire on the rim unless the latter is properly locked. The rim comprises two sections *A* and *B* which are provided with interlocking lugs. Section *A* has a series of lugs *C* which fit into recesses in the lugs *D* of section *B*, these lugs being so spaced around the rim that when the two parts are placed together and moved in opposite directions, the lugs will engage as shown. In order to prevent the two parts of the rim from moving relatively to each other, a lock *E* is arranged to fit between one pair of lugs. This lock is hinged at *F* so that it cannot become detached and mislaid. If the attempt is made to place the rim on the wheel with the lock out of engagement, it will strike against the felloe of the wheel. It is thus absolutely necessary to secure the lock

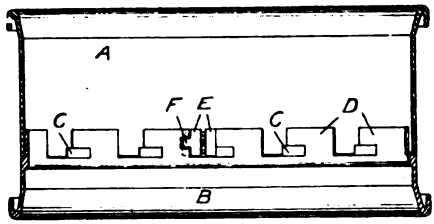

GILBERT DETACHABLE DEMOUNTABLE RIM

before the auxiliary rim can be placed on the wheel, making it impossible to accidentally leave the rim sections unlocked.

Another quick detachable demountable rim in which the three companies above mentioned were interested was the Wagenhorst, patented in 1915. The principle claim was for a rim that would be interchangeable and at the same time take care of the unavoidable variations in dimensions incident to manufacture.

One of the several devices covered was decidedly unique. The wheel, provided with a suitable felloe band was formed with an irregular, that is, non-circular, periphery. The wheel periphery was depressed or flattened at intervals to a diameter smaller than its normal diameter and smaller than the diameter of the rim to be fitted to the wheel. The rim was also initially shaped to an irregular configuration, it being flattened at intervals corresponding to the flattened portions of the wheel. The circumferential length of the inner surface of the rim was equal to the circumference of a circle, the diameter of which was not depressed or flattened.

In attaching the rim to the wheel its inner surface was brought to approximately the configuration of a circle having this diameter. The effect of flattening the rim at intervals was to increase its diameter between the points at which it was flattened out, and it thus assumed a configuration corresponding more or less closely to the configuration of the wheel periphery, but of slightly greater diameter at all points. It was thus possible to slip the ring freely into position upon the wheel felloe.

In order to secure the rim in such position, it was only necessary to force the flattened or depressed portions of the rim outwardly to give the rim a circular conformation. This had the effect of decreasing the diameter of the rim at those points where its diameter was formerly greater than the diameter of the circular portions of the wheel periphery, thus bringing the rim into contact with such portions of the periphery. The rim could thus be readily caused to clamp itself upon the felloe with a pressure amply sufficient to retain the same firmly in position. When the rim was thus locked in position upon the wheel, it was substantially circular in outline, so that no deterioration in the running qualities of the wheel resulted from making the felloe irregular.

To detach the rim from the wheel, it was merely necessary to release the pressure upon the flattened portions of the rim, which permitted the natural resiliency of the rim to restore the same to its initial irregular conformation. The rim was then free to be removed laterally from the wheel. This system of adjustment provided an ample locking device which effectually prevented the demountable rim from creeping. At the same time, irregularities due to manufacture could easily be neutralized. Again, the locking system also prevented the latteral displacement of the rim. The transverse split employed consisted of interlocking serrations which were placed on a slanting line laterally. This intensified the engagement of the teeth as pressure or tension was brought to bear and, at the same time, constituted a simple locking element. The rim was held to the wheel by means of a number of radial securing bolts operated by a suitable wrench. This wrench was arranged to engage the bolts so that the operator stood at right angles to the bolt head and, in fact, worked the crank of the tool just as if he were dealing with bolts placed on the outer side rather than the inner circumference of the felloe.

The Hopkinson detachable demountable rim comprises an annular base rim in three arc sections with side flanges; two interchangeable endless flange rings adapted on one side to co-act with a clincher

tire and on the other with a straight-side tire, and a small movable wedge-shaped key piece held in place by a spring latch. This key piece locks the rim parts together, or by its removal enables the rim to be collapsed for removal of the tire.

The Stungo divided demountable rim is simple in construction and requires no special wheels, as it will fit any wheel made for a detachable rim. All that is necessary with this rim is to open four hooks on the inside, which may be done with the fingers, and one-half of the rim lifts off, leaving the casing exposed for the removal of the inner tube. The repair being made, the half-rim is replaced and the hooks slipped over the pins, when the rim is ready for service.

Stanweld quick detachable demountable rims are no longer being manufactured, but many are still in use. The Series 40 rims were the Series 50 detachable rims made demountable and secured to the wheel by means of clamps, bolts and nuts. The No. 40 rim was universal detachable and had two removable side rings, reversible, so that the rim could be made to accommodate either straight-side or clincher tires. The No. 41 and No. 42 rims had only one removable side ring, the back flanges of both being integral with the rim base. The former was for straight-side tires, the latter for clincher tires. The detaching mechanism operated independent of the demounting mechanism. The adjusting ring was a flat band of spring steel transversely cut and clung to the inner circumference of the rim base by its own spring.

The Stanweld Series 60 rims consisted of five principal parts: a felloe-band; rim-base; wedge ring; two side flanges; and improved clamping devices. The No. 61 rim had flange rings for straight-side tires, the No. 62 rim for clincher tires. The corrosion of steel and the tendency of rubber to vulcanize makes is practically impossible to prevent tires from "freezing" to rims. This "freezing" is the greatest deterrent to rapid and easy manipulation of most demountable rims. This Stanweld demountable rim eliminated the necessity of separating the tire-clinch from the sides of the rim.

The felloe-band was endless, flanged and beveled at the rear circumference, and shrunk permanently on the wheel. The rim base, which slipped over the felloe-band, was transversely split and its ends were equipped with a toggle lock. This was beveled and grooved both at the front and rear edges of its inside circumference. The two endless side-flanges for straight-side or clincher beads fitted into the grooves in the outside circumference of the rim-base, thus preventing lateral movement when the rim was adjusted. A wedge-shaped trans-

versely-split steel ring was forced home between the felloe-band and the rim-base at their front circumference. This wedge ring was beveled on the top only, the base being flat. A projecting end facilitated removal of the ring. Six automatic clamps operating on bolts set in the wooden felloe locked the wedge-ring in position, thus securing rim and tire to the wheel.

The Kelsey Universal quick detachable demountable rim is made in sizes 34 by 4 1-2, 36 by 4 1-2 and millimeter sizes 820 by 120, 880 by 120, 895 by 135 only. It is of the solid base type with removable flange rings, which can be reversed so as to take either straight-side or quick detachable clincher tires. With this rim tires can be changed without demounting the rim from the wheel if desired. The rim is held on the wheel by a clamping ring, clamps, bolts and nuts. The Kelsey Permanent Straight-Side quick detachable demountable rim is made in the same sizes and is interchangeable on the same felloe band. It differs only in having a permanent straight-side flange on the inner side. With these rims a special channel-shaped steel felloe is used on the wheel.

Demountable Rims for Truck Tires

Without suitable rims the giant pneumatic tire could not have brought the motor truck to its present degree of usefulness. Most of the pneumatic truck tire rims now used are modifications of rims which have been used with passenger car tires and which attained widespread favor because of their dependability and the ease with which they permitted tire changes. With big pneumatic tires changes are not so frequent as with smaller sizes because the treads are thicker and therefore withstand puncture more easily. But when changes do become necessary on the road one of the distinct advantages in the use of pneumatic tires in truck service is the fact that they can be changed easily and quickly when used in connection with demountable rims. The quick-change advantage in this type of rim is perhaps a more vital consideration in truck-tire service than in passenger car service, since a passenger car may run a short distance after deflation without apparent injury, while a large pneumatic truck tire under load cannot be run at all without suffering great damage.

The Fisk demountable rim for commercial motor vehicles, one of the early types for use on both single and dual pneumatic tires, had the felloe beveled off through half its width at an angle of about 45 degrees. Upon the felloe fitted a band which conformed in shape to it and which bore a shoulder upon the side opposite to the bevel. This

band was held in place by bolts which passed through the felloe, the band and lastly a continuous wedge ring which had a similar shoulder. The wedge ring was thus forced up the beveled side and the shoulders grasped a U-shaped channel ring to which the tire was fastened. The elimination of the web band used in the older models allowed the use of longer spokes in the wheel and made it lighter, an especially important advantage in the case of small speedy trucks.

The Firestone demountable rim used on passenger automobiles as early as 1907 has been adapted to truck use for six to ten-inch tires. The structural principle of this Type C rim is a wedged-on continuous surface contact between rim base and felloe band effected by means of a continuous wedge clamp ring in such a manner that the rim can never be sprung out of a true circumferential or lateral alinement.

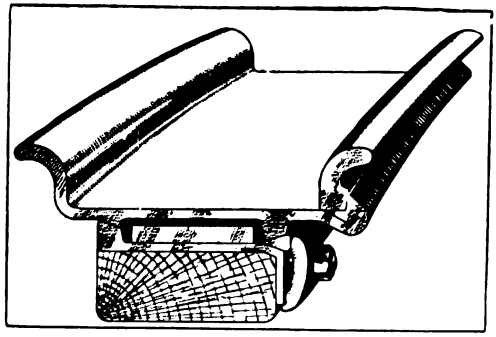

FIRESTONE DEMOUNTABLE RIM

The tire is held on the rim by means of a continuous removable side ring with transversely cut locking ring.

The tire is held on the Goodyear truck tire rim by a continuous side ring or flange retained in place by a split locking ring that fits into a channel in the rim base, the locking ring having a hooked end to insert through a hole in the channel of the rim base. Sizes for six to ten-inch tires are available, accommodating all capacities of trucks up to five tons.

The Kelsey demountable pneumatic truck tire rims are made in 36 by 6 and 38 by 7 sizes in straight-side type only. Both are of the solid-base type, with permanent flange on the inner side and removable side and locking ring on the outer side. Tires can be changed without demounting the rim from the wheel. The valve hole is slotted to prevent binding the valve stem.

Flanged Steel Rims to Fit Railway Tracks

The adaptation of the motor truck to run on standard gage railroad tracks became an accomplished fact in 1916, during the American punitive expedition into Mexico, and was pronounced a complete

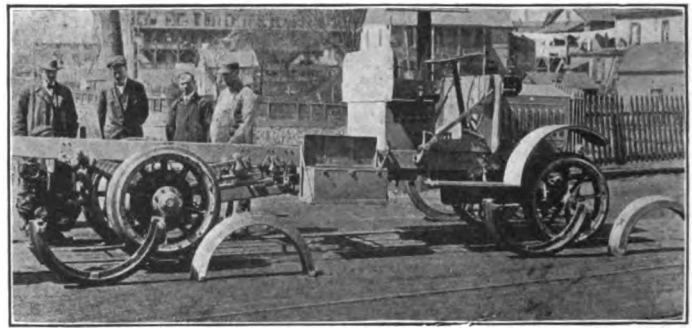

Mounting Special Tire Flanges

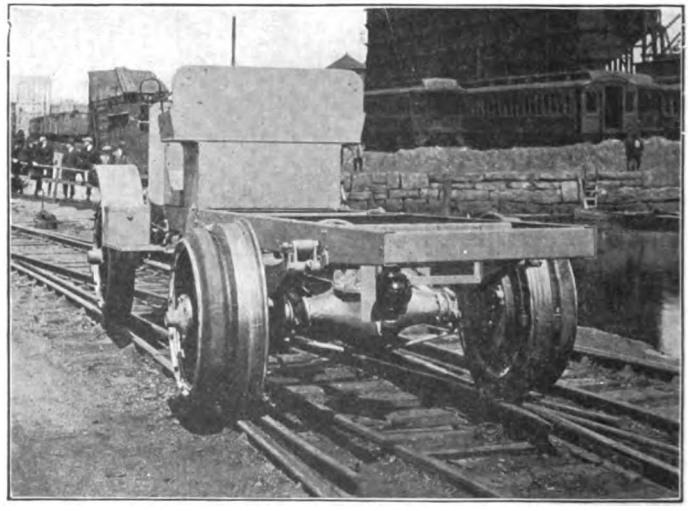

Motor Truck Mounted on Rails

success by Army experts. Several trucks used by the United States Army were equipped with flanged steel rims, fitted over the wheels, which took the rails the same as a locomotive wheel. These rims can be carried on the truck while on regular road service, and when desirable to run the truck over the railway lines, the flanges can be fitted over the tires of the truck wheels in fifteen minutes and the

truck is ready to take the rails under its own power. The device was invented and developed by A. L. Riker, vice-president and chief engineer of The Locomobile Co. of America, who was at that time chairman of the Committee on Internal Combustion Motors of the United States Naval Advisory Board.

Applying Truck Tires to Rims

Truck tires are applied to rims in the same general manner as passenger car tires. They are larger and heavier, however, have stiffer beads and therefore require more strength and heavier tools.

Make sure that no dirt nor foreign substance has dropped into the casing and that the soapstone or graphite lubricant has not caked on in spots. Inflate the tube to make sure it does not leak and that the valve nut is sufficiently tight. Lubricate the tube with soapstone or graphite, spreading a moderate quantity evenly over the surface with a cloth or brush. Inflate the tube and insert it carefully in the tire. Inflate it again just sufficient to round it out firmly, and carefully insert the flap. Screw a valve cap on the valve stem to protect the threads while mounting the tire on the rim.

Remove rust and dirt from the rim. See that the side and locking rings are in good condition and that the locking ring slot has not been dented by pounding. Lay the rim down with its inside fixed flange downward. Place the tire squarely on the rim with the valve stem of the tube over the valve stem hole of the rim. Because of the stiffness of the beads and the width of the rim the valve stem cannot be inserted first as in the case of a small pneumatic tire. Allow the tire to drop down evenly about the rim until the valve stem is reached, then press the valve stem down sideways and toward the end of the flap. Hold the valve stem in this position with a thin bar or heavy screw driver, being careful when the tire drops down the rest of the way that the valve stem does not catch in the locking groove. New types of rims are being made with valve stem slots to facilitate application of the tire. Turn the tire on the rim until the valve stem appears at the valve stem hole and can be pulled through, then screw down the rim nut fastening the valve stem securely in place.

Slip the side ring over the rim, and with a large tire iron force it down into place all around the tire. It will go easily if the inner tube it not too much inflated, but standing on the tire before applying the ring usually helps. Insert the hooked end of the locking ring into the locking ring hole. Continue to press down the side-ring and at the same time carefully fit the locking ring into its channel around the entire

circumference. With nine, ten and twelve-inch tires the ring must be pounded somewhat with a hammer before it will enter the channel and care must be taken not to spring the locking ring during this operation. The tire is then ready for inflation to the pressure indicated by the manufacturer.

Demountable Wheels

The European automobile makers, strange as it may seem, still prefer the solid clincher rim without any detachable features so far as rim or felloe are concerned. Demountability is secured by them, preferably, through the employment of an entire spare wheel with the inflated tire already on. All that is necessary is to adjust five screw bolts and the trick is done. They claim that there is a distinct advantage in this procedure through the gain in mechanical simplicity and the elimination of many adjustable parts calculated to get out of order. Unless the various elements of demountable rims are properly lubricated or taken apart and cleaned and dried after a wet run, rust will invariably develop. This quickly leads to the "freezing" of contiguous steel surfaces and then the difficulty of separation becomes enormous. Special grade steels, electrical welding, and stamping machines have all of them contributed their share to the present-day quick-detachable and demountable rims, but these agencies cannot greatly lessen the chances of corrosion.

The objection that has been raised to carrying spare wheels on pleasure cars has been mainly that of added weight. And this has, in its turn, provoked discussion as to the relative merits of wooden and wire wheels. While Americans have centered their attention upon these two wheels, foreign makers have gone in for the all-metal wheel of stamped steel.

Agreeably to processes developed under a well-known English patent, the steel wheels are stamped out in two sections split through the felloe, the spokes and the hub at right angles to the axial line. These two parts are then brought together and welded electrically. The result is a solid clincher felloe, and hollow spokes and hub, the whole wheel weighing several pounds less than its lightest rival in service here. Because of this lightness, it is an easy matter to withdraw or replace a wheel, and the jacking up and attendant operations take but a very few minutes. This, in short, may be said to be the European answer to the quick-detachable and demountable rims, and war service, where time saved is a matter of vital consequence, has amply demonstrated the value of this method of making a quick change. Further

than that, military experience abroad with scouting cars has shown that much is gained in the way of ruggedness and capacity to stand up to duty under a wide range of exacting road conditions. Just as the exigencies of racing inspired the demountable rim, may not the War in Europe to a more general adoption of interchangeable wheels with tires attached?

Demountable wheels have also been used to some extent in England and America, especially in the small clincher tire sizes, although all cars equipped with wire wheels are furnished with a spare wheel.

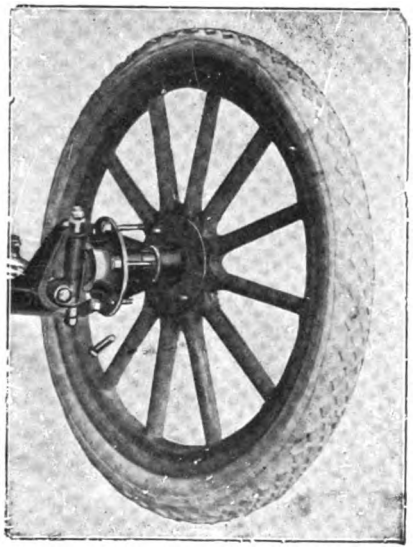

STANDARD DEMOUNTABLE WHEEL

Demountable wheel attachments for Ford cars have been placed on the market which readily make the four wheels on the car demountable and supply a fifth spare wheel, providing a quick change for either a flat tire or broken wheel. The Stone demountable wheel attachments may be mentioned in this connection. In addition to the spare wheel they include supporting plates, fastening and driving studs, speedometer bolts, front flange, nuts and an offset wrench. No machine work or new holes are required and when the attachments are applied a wheel change can be made by removing three nuts.

By means of the Standard demountable wheel set for Ford cars and a spare wheel, changing tires on the road is greatly simplified. All that needs to be done is to unscrew the four nuts shown in the illustra-

tion, change wheels and replace the nuts. The regular wheels already on the car may be used, the special parts furnished with the demountable wheel set rendering them all interchangeably demountable, one with the other. These special parts include four inner flanges, eight flange retaining bolts and nuts and sixteen special hub bolts and nuts. One inner flange and two bolts are used to equip each wheel, while four special hub bolts and nuts are mounted on each hub.

Among the early English examples of the demountable wheel was the Dunlop with its special mechanism for tightening and slackening the wheel. It was removed and replaced by means of a large key fitting over the hub, which was turned around bodily to the right or left, according as it was desired to fasten the wheel in place or loosen it for removal. A locking pawl prevented the wheel from loosening itself as the result of shocks, strains or jars to which it was subjected when in place.

The Healy removable rim was the demountable part of a special wheel designed on unique lines. The rim was held in place on the wheel by a series of metal clamps which were firmly fastened to the ends of the spokes. The rim was removed by loosening a nut on each clamp, and turning down the clamps, when rim and tire could be removed as a unit. The new tire and rim were then put in place, the clamps adjusted and the nuts set up by a brace socket wrench. The ordinary wheel felloe was thus done away with, weight being saved. It was also claimed that the strength of the wheel was increased, the enormous bind of the clamps keeping the spokes tight.

The Parker vehicle wheel is an American instance of the rim being fastened directly to the spokes of an all-metal wheel. Alternate spokes are provided with radial locking screws and lateral clips substantially like those employed to attach the Parker demountable rim to an ordinary wheel felloe.

"Spare" Wheels

An interesting development of the automobile tire rim was the so-called "spare" wheel, an emergency device probably suggested by one of the chief claims for dual tires on commercial vehicles. The English Stepney spare wheel is intended to be carried on a motor car with the tire inflated ready for use. In case of a puncture or other injury to one of the tires in use, the spare wheel can be attached quickly and securely alongside the wheel in trouble without waiting to remove the latter until the tour is finished.

The Stepney wheel is a rim without felloes, spokes or hub. When not in use it is carried, with an inflated tire upon it, exactly as the ordinary spare tire is carried on the rear of the car. One side of the rim has four hooks or clamps that fit over the clincher lip of the permanent wheel, the deflated casing being merely pushed inward by the hand to allow the clips to enter. Two of the clips are rigid and two are adjustable by thumb nuts, making it only necessary to position the two rigid clips and then after positioning the adjustable clips, tightening them, thus drawing the four clips tight.

The Burrows and Black emergency wheels, the Hall spare wheel and the Be-Be-Co. twin rim are similar in purpose and construction.

Special Rims and Wood Wheels

A few light cars, such as the Ford and Chevrolet, are regularly equipped with clincher rims permanently shrunk on the felloes of the wheels, neither the wheels nor the rims being demountable. The desire on the part of motorists to enjoy the benefits of demountable rims with these cars has led several firms to supply special wood wheels equipped with demountable rims for 30 by 3 1-2 tires, or the oversize 31 by 4, that may be readily substituted for those on the car.

Firestone wood wheels, for example, are of hickory in varnished natural wood or painted black. They take a solid, one-piece demountable rim for clincher tires only, that is held on the wheel by a clamping ring, clamps, bolts and nuts. The complete set includes four wheels with rims and one spare rim for the extra tire together with twenty-four hub bolts, and a socket wrench.

Kelsey steel-felloe wheels with demountable rims and finished in natural wood or black are furnished for the same purpose. A solid clincher rim is held on the wheel by means of four sets of bolts, clamps and nuts.

Baker hickory wheels, black or natural finish, are equipped with 30 by 3 1-2 Baker split clincher rims with anchor plate and driving studs, the rims being held on the wheel by means of bolts, nuts and a clamp which forces the rim on the wheel in a true circle.

Small cars such as those mentioned are frequently converted into one-ton trucks by lengthening the wheelbase, providing a suitable body and equipping the rear axle with larger wheels and tires. For this purpose Firestone rear wheels of hickory in either natural or black finish are furnished with demountable rims to take 32 by 4 1-2 tires. A complete set consists of two wheels with rims, clamping rings,

clamps, bolts, nuts and one spare rim for an extra tire. Either the regular Firestone quick demountable or quick detachable demountable type of rim with side and locking rings may be had.

Kelsey rear truck wheels are designed for the same purpose. The rim with steel felloe is a straight-side, one-piece, transversely cut rim, with dovetail locking device. It is held on the wheel by clamps, bolts and nuts. The complete set consists of two wheels with rims, clamps, bolts and nuts, a spare rim for an extra tire and twelve hub bolts and nuts.

Baker rear truck wheels with Baker straight-side split demountable rims are furnished in 32 by 4 1-2 size for pneumatic tires to replace solid tires on the rear wheels of Ford trucks.

Rim Patent Litigation

One of the hardest fought and most sensational legal battles in recent years was that relating to the Perlman and Munger patents for demountable rims for pneumatic tires.

In October, 1913, Louis H. Perlman brought suit against the Standard Welding Co. for infringement of his United States Patent No. 1,052,270, applied for in May 21, 1906, and granted February 4, 1913. This patent covered the separating wedge, the bolt and nut, and the use of the short-stem lug and the air space between the rims. The idea was not to obtain the greatest measure of contact between the tire and wheel rim, which had been the aim of other inventors. The first Perlman rim was completed by July 1, 1903, and given its first real road test in August, 1904, after some improvements had been made. The original patent application described it as a "removable" rim, but this was substituted by another application on June 29, in which the word "detachable" was used. Later the term "demountable" was suggested by a patent examiner, Vinet's patent of 1905 being cited.

On August 18, 1915, Judge Hunt, in the United States District Court for the Southern District of New York, sustained the patent, enjoined the Standard Welding Co. and ordered an accounting of the profits which the defendant company had derived through infringement.

On appeal by the defendant, Judge Lacombe in the United States Circuit Court of Appeals, New York City, on February 15, 1916, affirmed the findings of the lower court, holding the patent not anticipated, valid and infringed. Thereupon, $1,010,000 was paid by the Standard Welding Co. to the Perlman Rim Corporation, and an

arrangement made to continue the manufacture of "Stanweld" rims under a Perlman license.

Until February 15, 1916, anyone had made demountable rims without restrictions, but the decision rendered on that date gave Perlman a practical monopoly on all forms of such rims, and the Perlman patent, although not issued until 1913, was made operative by Perlman swearing that his invention dated back to 1903.

The factory of the Standard Welding Co. was closed and all rim manufacturers notified to discontinue making rims. Then the Perlman Rim Corporation was organized with a capital of $10,000,000, and it was understood that Perlman received between $3,000,000 and $4,000,000 for his invention.

The entire automobile industry was disturbed and its output seriously threatened. Automobile manufacturers who had been receiving their rims from the Standard Welding Co. made arrangements with the Perlman Rim Corporation to release a sufficient number to maintain their deliveries, and most of the other rim manufacturers submitted and turned their plants over to the Perlman Rim Corporation.

Being firmly convinced that this patent was unjust and a serious menace to the entire motoring public, The Firestone Tire & Rubber Co., which had been manufacturing demountable rims since 1908, refused to recognize the Perlman claims in any way. Braving an injunction and the closing of its rim plant, this company decided to fight the matter out.

A suit for infringement was brought against the Firestone company by the Perlman corporation, which also sought an injunction. The injunction was first argued in New York before Judge Mayer on April 13, 1917. By that time the Firestone attorneys had gathered new evidence showing the character of the testimony on which the decision in the Perlman suit against the Standard Welding Co. had been obtained and asked that they be given an opportunity to present the facts in open court. On this showing, an injunction was denied.

Later the infringement suit came to a hearing, and after five days of legal skirmishing before Judge Learned Hand in the United States District Court of New York, was brought to a dramatic close through its sudden withdrawal by the attorneys for the rim corporation, and its final dismissal without prejudice to either side was ordered by the Court. This was followed later by the announcement of L. H. Perlman's removal from the presidency of the company bearing his name because of his complete lapse of memory while on

the stand regarding his London business career of 1895, and his refusal to answer questions or to affirm or deny allegations reflecting upon his integrity.

Although this surprising dénouement constituted a signal victory for the Firestone company, the Perlman patent continued technically a valid grant. However, the significance of the situation laid in the fact that the historic suit against the Standard Welding Co., authenticating the Perlman patent, was won principally because of the Court's belief in Mr. Perlman's rectitude and veracity, and the acceptance of his testimony, supported by witnesses, as to the manner and date of the mental conception of his invention.

As an outgrowth of this suit against the Firestone company, Perlman was indicted for perjury. In various courts he sought to enjoin the use of property belonging to him which he had offered as evidence in the Firestone suit, claiming that such use would be contrary to the Fourth and Fifth Amendments of the Constitution, which provide against unreasonable seizure of property, and that no defendant shall be compelled to testify against himself, but on May 6, 1918, it was finally decided by the United States Supreme Court that Perlman could not enjoin the use of articles voluntarily impounded with the Clerk of the District Court by the United States Attorney.

Meanwhile Louis F. DeMunger had brought suit against the Perlman Rim Corporation, alleging infringement of United States Patent No. 638,588 of December 5, 1899, for securing the rim to the wheel through tapering their adjacent surfaces and using a wedged piece to cause a tension to hold the rim in place. The Munger patent was assigned to the International Wheel & Traction Co. in 1891, and a little later to the National Wheel Co., and was reassigned too Munger individually in 1915. The patent expired December 6, 1916.

The Perlman people claimed inoperativeness of the Munger patent, non-infringement and invalidity. It was asserted that the rim was not easily detachable with ordinary tools carried on the road, but this was disproved and that defense set aside.

In his decision for the plaintiff handed down June 20, 1917, Judge Manton in the District Court for the Southern District of New York, held that the Munger patent and Perlman rim alike employ a wedge to secure a tire-carrying rim under tension on a motor car wheel so that the rim shall hug the wheel tightly and be held firmly in position while at the same time it can be detached readily by freeing the wedge surface. The Munger patent, however, antedated Perlman's claims.

The only difference in construction between the two patents was that the Perlman rim used an annular strip between the two edges of the felly with which the rim was not in contact, being held therefrom by the wedge flange at the inner edge; while the Munger rim had the felly at an angle and a wedge used to bring the rim under tension. Therefore, the court held the Perlman rim an infringement of the Munger patent.

The claim of invalidity was made because of a patent issued to Perkins & McMahon in 1843 for a detachable rim for vehicles. Although this was detachable, it was attached by hydraulic pressure and was not detachable with ordinary tools. The second patent suggested was that issued to Carberry by the British Patent Office, but did not involve the same principles as the Munger patent.

The delay in bringing suit, a serious consideration, was caused by the inability of the owners of the Munger patent to bear the expense of patent litigation. A judgment was entered granting a decree for the plaintiff and directing the Perlman Rim Corporation to account before a master, and granting Munger recovery of a reasonable royalty.

It had been intimated that damages, estimated on a basis of reasonable royalty, may be recoverable against other rim manufacturers for a period of about 5 1-2 years preceding the expiration of the Munger patent on December 5, 1916. Munger claimed that nearly twenty companies had manufactured about 5,000,000 rims infringing his patent, and suggested as the proper royalty $1.50 a set, Perlman's own valuation placed on "Stanweld" rims.

Should the Munger decision be sustained by the United States Circuit Court of Appeals, the Munger patent would then head the list of wedged-on demountable rims. Meanwhile, however, suits brought by Erle K. Baker of the Universal Rim Co., against Perlman are still pending. These claim violation of numerous patents covering the practice of mounting a rim upon a conical seat. Apparently the courts must decide what constitutes a wedge before the present complicated tangle of rim patents can be straightened out.

Rim Standardization

As already stated in this chapter, the beginning of pneumatic tire rim standardization was made in 1910 when the United Rim Co., of Akron, Ohio, brought out the Standard Universal rims under patents pooled by the Goodrich, Diamond, Goodyear, Hartford, Morgan & Wright and G. & J. tire and rubber companies.

This commendable attempt was to a degree abortive, however, and early in 1913 the Society of Automotive Engineers began the long series of investigations which have resulted in the rim standards of to-day. In order to simplify the rim situation for both the automobile and tire manufacturer by eliminating the annoyance arising from the many rim types on the market exhibiting an uncalled for variety of features, it was realized that impartial investigations and unbiased decisions such as the S. A. E. pleasure car wheel committee would be able to make were needed. The United States Rubber Co. and the Goodyear Tire & Rubber Co. were quick to see this and C. B. Whittelsey and H. E. State were respectively made members of the committee. These companies announced their willingness to give rim manufacturers licenses to produce rims under all patents in their possession. Gradually the co-operation of other firms was enlisted in the effort to avoid complications due to patent ownership and real progress began to be made in the process of elimination.

As a preliminary to practical rim standardization, attention was directed by the Firestone Tire & Rubber Co. in 1914 to the need of a standard steel felloe band for automobile wheels for quick detachable and demountable rims, whether clincher or straight-side, it being shown that with slight modifications such wedge-clamped split demountable rims as the Baker, Detroit, Kelsey, Stanweld and Prudden, and such ring-wedged quick detachable demountable rims as the Firestone, Kelsey universal, Goodyear and Standard universal could be applied to one standard felloe band.

Early in 1915 the S. A. E. adopted the recommendation of its pleasure car wheel committee substituting for a list of more than fifty tire sizes a schedule of nine even or regular sizes of both tires and rims together with an equal number of odd or oversize tires for use on the same rims as follows:

Rim Sizes	Even tire sizes for Manufacturers and Consumers	Odd oversizes for Consumers only
30x3	30x3	31x3½
30x3½	30x3½	31x4
32x3½	32x3½	33x4
32x4	32x4	33x4½
34x4	34x4	35x4½
34x4½	34x4½	35x5
36x4½	36x4½	37x5
36x5	36x5	37x5½
38x5½	38x5½	39x6

This schedule included a new 36 by 5 rim not previously recommended, identical with the 4 1-2-inch or F-section rim, its width, be-

tween flanges being half way between the 4 1-2-inch or F-section and the 5 1-2-inch or G-section rims, its seat diameter being 26 inches the same as the former 36 by 5 rim. This was deemed necessary to facilitate the use of the oversize 37 by 5 1-2 tire.

In 1918 the War Service Committee of the Rubber Industry of the U. S. A. in co-operation with the Tire and Rim Division of the S. A. E., recommended for standard practice the use of the straight-side type of rim for all sizes except 30 by 3 and 30 by 3 1-2 for which the clincher type was to continue, also the following schedule of tires and rims:

STANDARD PNEUMATIC TIRES AND RIMS FOR PASSENGER CARS AND COMMERCIAL VEHICLES

Nominal Tire and Rim Sizes		Oversize Tire		Tire-Seat Dia. (Rim)		Type Rim
Inches	Mm.	Inches	Mm.	Inches	Mm.	
30x3½	90/585	31x4	105/585	23	585	clincher
32x3½	90/635	33x4	105/635	25	635	straight side
32x4	105/635	34x4½	120/635	25	635	straight side
34x4½	120/635	35x5	135/635	25	635	straight side
36x6	150/610	38x7	175/610	24	610	straight side
38x7	175/610	40x8	200/610	24	610	straight side
40x8	200/610	....	.....	24	610	straight side

These recommendations and the following rim specifications were approved by the War Service Committee of the Rubber Industry of the U. S. A.; the Tire and Rim Association, and the board of directors of the National Chamber of Commerce.

PROPOSED STANDARD PNEUMATIC TIRE RIM SECTIONS AND CONTOURS FOR PASSENGER CARS AND COMMERCIAL VEHICLES

Draw No.	1	2			3	
Nominal tire and rim size	30x3½	32x3½	33x4	34x4½	36x6	38x7	40x8
Rim Dia. (D)	23	25	25	25	24	24	24
Rim Circum[a]. (Tire Seat)	72.257	78.540	78.540	78.540	75.398	75.398	75.398
Rim, Type.							
A	2.600	3.432	3.888	4.380	6.330	7.000	8.500
B ±0.047	2.050	2.312	2.688	3.120	4.330	5.000	6.000
C	0.275	0.560	0.600	0.630	1.000	1.000	1.250
R	0.910	0.840	0.840	1.095	....	....	....
E	0.1400	0.1875	0.1875	0.1875	....	....	....
F	0.3400	0.2500	0.2500	0.3125	....	....	....
H	0.50	0.32	0.34	0.38	....	....	....
K	0.0780	0.5100	0.5600	0.6150	0.7187	0.7187	0.8750
L	0.5780	0.6870	0.7800	0.8750	1.2656	1.2656	1.5000
M	0.680	0.367	0.440	0.495	....	....	....
O	....	0.1990	0.2450	0.3030	0.5469	0.5469	0.6250

[a]Tolerance for rim circumference, ±0.047 in. All dimensions given in inches.

RIM SECTIONS AND CONTOURS, PNEUMATIC TIRES FOR PASSENGER CARS AND COMMERCIAL VEHICLES.—The rim and contour dimensions

given in the following table and drawings were proposed for S. A. E. standard as applying to the tire sizes suggested for standardization. The thickness of straight-side rims is not specified because it depends upon the steel composition and hardness, which have not been standardized,

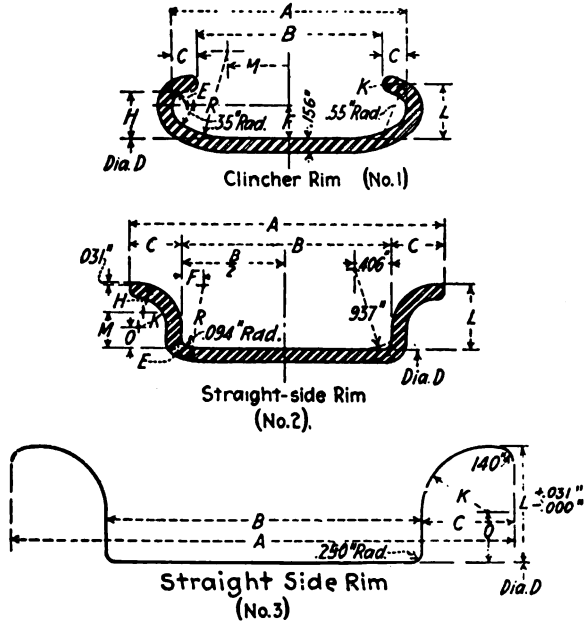

RIM SECTIONS AND CONTOURS FOR PNEUMATIC TIRES

but are required to conform to S. A. E. deflection and set test of rims. This dimension is left to the judgment of the rim manufacturers in present practice.

VALVE-HOLE SIZE, AUTOMOBILE RIMS.—The division recommended that the valve hole in rims for the proposed standard tire sizes shall be 5/8-inch diameter up to 6-inch, rim inclusive. That this conforms with existing practice is shown by the following table.

Present practice, valve-hole diameters,	1/2	11/32	9/16	5/8	21/32	1/2x27/64
Manufacturers using each size	1	2	4	5	2	1

Valve-Hole Size, Motorcycle Rims.—The valve hole in both the *BB* and *CC* types of motorcycle rims have been found to average 3-8 by 17-64 inches. This size has therefore been adopted for the United States military motorcycle. The division recommended that the dimensions and tolerance be as shown on the accompanying drawing for

S. A. E. standard sizes from three to six inches inclusive. It was recommended that the following values for seven- and eight-inch tires

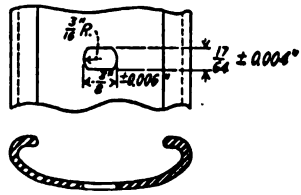

MOTORCYCLE VALVE HOLE

be added to the existing S. A. E. standard, the values being recommended by the Tire and Rim Association:

Size of Tire		Maximum Load,	Inflation Pressure,
In.	Mm.	Pounds	Pounds
7	175	2,700	100
8	200	3.650	110

MOTORCYCLE TIRE CAPACITIES AND PRESSURES.—The division recommended that the carrying capacities and inflation pressures for motorcycle tires to be adopted by the Tire and Rim Association be adopted by the Society as S. A. E. Standard.

S. A. E. DEFLECTION AND SET TEST OF RIMS FOR AUTOMOBILE PNEUMATIC TIRES.—The recommended S. A. E. deflection and set

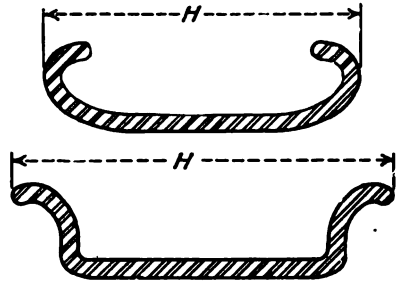

SECTIONS FOR DEFLECTION AND SET-TEST

test of rims is a pressure test with predetermined deflection under predetermined pressure. The test is made with water pressure.

The measurements of deflection for either a clincher or a straight-side rim should be made across the extreme width, as shown by *H* on the accompanying illustration.

Deflection should be measured from a fixed inflation load of 25 pounds per square inch for 3 1-2-inch, four-inch and 4 1-2-inch sections, and 50 pounds per square inch for six inch sizes and larger, up to a predetermined maximum, as follows:

Rim Size Nominal, Inches	Pressure, Pounds,	Maximum Deflection, Inches	Total Permanent Set, Inches
3½	140	0.06	0.02
4	160	0.07	0.03
4½	180	0.10	0.06
6	200	0.15	0.06
7	200	0.15	0.06
8	Yet	to be	determined

In conducting the tests, measurements of deflection should be made after load increments of 25 or 50 pounds as above are added; at a corresponding set the load should be released.

During 1918 and 1919 progress was made by the Tire and Rim Division of the S. A. E. in standardizing wood felloe dimensions for pneumatic tire rims in co-operation with the Automotive Wood Wheel Manufacturers' Association, and the following table was approved:

WOOD FELLOE DIMENSIONS

Nominal Tire and Rim Size	Width	Depth
30x3½	1½	1¼, + 1/16, - 0
32x3½	1½	1¼, + 1/16, - 0
*32x4	1¾	1¼, + 1/16, - 0
33x4	1¾	1¼, + 1/16, - 0
*32x4½	2⅛	1¼, + 1/16, - 0
34x4½	2⅛	1½, + 1/16, - 0
36x6	3¼	1 5/8 ± 1/16
38x7	3 29/32	1 5/8 ± 1/16
40x8	4¼	1 5/8 ± 1/16
*44x10	5¼	1 5/8 ± 1/16

Dimensions in inches.

AIRPLANE LANDING WHEEL RIMS

The clincher type still holds the field in airplane tires because in combination with its rim it is the lightest tire. Airplane tires must sustain severe side thrusts in landing and the clincher type is not readily pulled off by such strains. On account of the difficulty of application, however, it may some day be replaced by straight-side tires, although patent airplane wheels and rims, such as the Dunlop-Macbeth, have been devised to permit rapid mounting and demounting of tires having wired or inextensible beads, yet prevent lateral displacement of the tire when fitted to the rim. Wire landing-wheels are the rule and considerable progress has been made in standardizing special airplane clincher rims by the Society of Automotive Engineers.

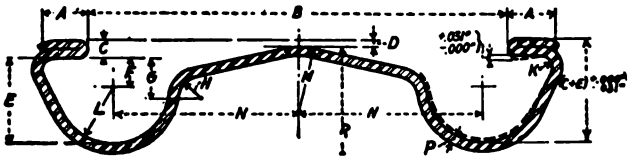

CROSS-SECTION OF LANDING-WHEEL RIM

TABLES OF AIRPLANE LANDING-WHEEL RIM DIMENSIONS

Rim Size	Tire Size Mm. (Approx.)	Tire Size Inches.	A	B	C	D	E	F	G	Radii H	Radii K	Radii L	Radii M	N	P	Diam. R	Circum. (πR)
			In Inches. —0.000	±0.046	—0.006 +0.021	±0.016											
U_3	75/700	28x3	13/64	1 39/64	0.104	0.049	27/64	13/64	0.159	1/8	0.039	7/32	19/64	45/64	0.052	21 25/64	67.201
U_5	60/575	22x2½	13/64	1 39/64	0.104	0.049	27/64	13/64	0.159	1/8	0.039	7/32	19/64	45/64	0.052	18 1/64	56.598
	75/600	24x3															
Z_3	100/700	28x4	5/16	2 11/16	0.104	0.042	9/16	3/16	0.266	3/16	5/64	3/8	1/2	1 3/16	0.078	20 5/32	63.323
	125/750	30x5															
Z_3	150/800	32x6	5/16	2 11/16	0.144	0.082	9/16	3/16	0.266	3/16	5/64	3/8	1/2	1 3/16	0.094	20 5/32	63.323

[5]Tolerance from nominal after lacing +0.000 to —5/64 in.

Rim Size	Tire Size Mm. (Approx.)	Tire Size Inches.	A	B	C	D	E	F	G	Radii H	Radii K	Radii L	Radii M	N	P	Diam. R	Circum.[6] (πR)
			In Millimeters. +0.787	±1.168	+0.533 —0.152	±0.406											
U_3	75/700	28x3	5.156	40.868	2.642	1.245	10.719	5.156	4.039	3.175	0 991	5.563	7.544	17.856	1.321	543.330	1706.903
U_5	60/575	23x2½	5.156	40.868	2.642	1.245	10.719	5.156	4.039	3.175	0.991	5.563	7.544	17.856	1.321	457.606	2437.587
	75/600	24x3															
	125/750	30x5							6.756	4.775	1.981	9.525	12.700	30.174	1.981	511.962	1603.402
Z_3	100/700	28x4	7.950	68.273	2.642	1.067	14.300	4.775									
Z_3	150/800	32x6	7.950	68.273	3.658	2.083	14.300	4.775	6.756	4.775	1.981	9.525	12.700	30.174	2.388	511.962	1603.402

[6]Tolerance from nominal after lacing +0.000 to —1.981 mm.

LANDING-WHEEL RIMS.—The foregoing table shows the proposed landing-wheel rim dimensions. Additional inspection requirements, besides those indicated by the table, are that the rim out-of-flat shall not exceed 1-16 inch when free on surface plate; rim tolerance for out-of-round is 3-32 inch; buckled rims are covered by the surface-plate inspection and tolerance limits; rims must be free from defective welds.

S. A. E. STANDARDS

The Following Report of the Tire and Rim Division, as amended and accepted by the Standards Committee, was approved by the Council at the general meeting of the Society, June 21, 1920. These new standards require only the approval of the members of the Society to be obtained by letter ballot.

AUTOMOBILE RIM VALVE HOLES

The Tire and Rim Division recommends that the present S. A. E. standard for automobile rim valve holes be extended to include the dimensions for the 5, 8 and 10-inch tire rims and that certain lengths

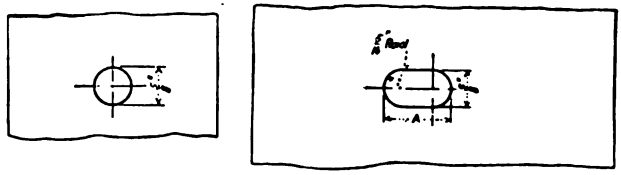

AUTOMOBILE RIM VALVE HOLES

in the present standard be increased. The present S. A. E. standard revised and extended as recommended by the Division is given in the accompanying table:

Rim size ..... Inches	3½	4	4½	5	6	7	8	10
A (min)	⅝	⅝	⅝	1 1/16	2 1/16	2⅝	3¼	4⅛

FELLOE-BAND TOLERANCES

Owing to variations in the thickness of commercial tapes, with the resulting inaccuracy of wheel measurements, it is recommended that approved standard tapes be used for measuring felloe-band circumferences, of which one set is intended for truck and one for passenger-car wheels.

The Division therefore recommends that the present S. A. E. standard for allowable tolerances in felloe-bands be extended to include the following note:

It is recommended that all measurements of truck and passenger-car wheel circumferences be made with approved standard wheel tapes furnished by the Tire and Rim Association.

Deflection and Set Test of Automobile Pneumatic Tire Rims

The present S. A. E. standard for deflection and set test of automobile pneumatic tire rims specified the pressure, deflection and permanent set for 3 1-2, 4, 4 1-2, 6 and 7-inch rims only. The Tire and Rim Division now recommends the pressure, deflection and permanent set for the 5, 8 and 10-inch rims. The present S. A. E. standard extended to include the Division's recommendation follows:

Pneumatic Tire Rim Tests

Rim Size Nominal, Inches	Maximum Pressure, Pounds Per Square Inch	Maximum Deflection, Inches	Total Permanent Set, Inches
3½	140	0.06	0.02
4	160	0.07	0.03
4½	180	0.10	0.06
5	190	0.12	0.06
6	200	0.15	0.06
7	225	0.15	0.06
8	250	0.15	0.06
10	250	0.15	0.06

The deflection should be measured from a fixed inflation load of 25 pounds per square inch for 3 1-2, 4 and 4 1-2-inch sections, and 50 pounds per square inch for 5-inch and larger sections up to the maximum pressures given.

Motorcycle Rim Sections

Circularization of the motorcycle industry in 1919 indicated that standard current practice includes only tire sizes which are mounted on the CC rim. These tire sizes were adopted by the Society that winter and in order that the rim specification shall be in conformity with this list of tire sizes the Tire and Rim Division recommends that the BB rim section be withdrawn from the present S. A. E. recommended practice for motorcycle rim sections. It is the opinion of both the Motorcycle and Tire and Rim Divisions that the BB rim section can be re-established as a standard should the use in the future of light weight motorcycles carrying the BB rim become general enough to warrant its inclusion in the standard.

Pneumatic Tires for Passenger Cars and Commercial Vehicles

The Division recommends that the present S. A. E. standard for pneumatic tires and rims for passenger cars and commercial vehicles be

revised so as to eliminate the 42 by 9-inch tire and rim as regular equipment. This size tire is considered a special application as the oversize for the 40 by 8-inch on pneumatic-tired trucks and not as a

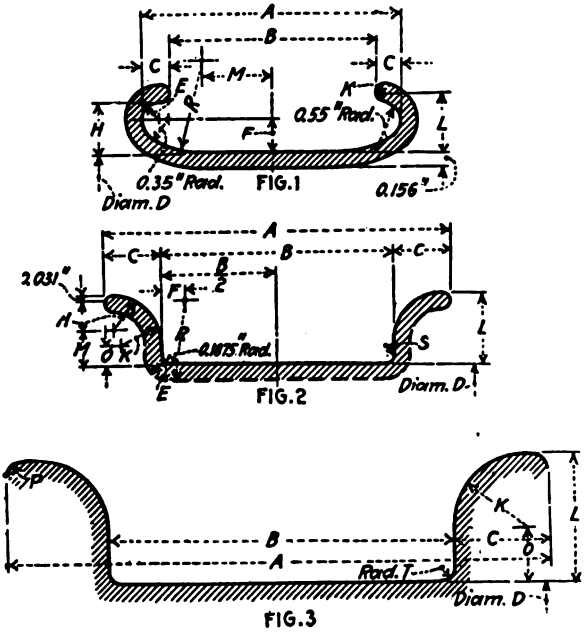

RIM SECTIONS AND CONTOURS FOR PNEUMATIC TIRES

regular size. It is also felt by the Division that the 44 by 10-inch is now well enough established to be included in the standard as regular equipment.

The S. A. E. standard revised as proposed is as follows:

Nominal Rim	Tire and Sizes	Oversize Tire		Tire-Seat Diameter (Rim)		Type of Rim
In.	Mm.	In.	Mm.	In.	Mm.	
30x3½	90/585	31x4	105/585	23	585	Clincher
32x3½	90/635	33x4	105/635	25	635	Straight side
32x4	105/610	33x4½	120/610	24	610	Straight side
33x4	105/635	34x4½	120/635	25	635	Straight side
33x4½	120/610	34x5	135/610	24	610	Straight side
32x4½	120/585	33x5	135/585	23	585	Straight side
34x4½	120/635	35x5	135/635	25	635	Straight side
34x5	135/610	36x6	150/610	24	610	Straight side
36x6	150/610	38x7	175/610	24	610	Straight side
38x7	175/610	40x8	200/610	24	610	Straight side
40x8	200/610	42x9	225/610	24	610	Straight side
44x10	250/610	....	.....	24	610	Straight side

RIM SECTIONS AND CONTOURS FOR PNEUMATIC TIRES

The Tire and Rim Division recommends that the present S. A. E. standard for rim sections and contours for pneumatic tires for passenger cars and commercial vehicles be revised in accordance with the dimensions submitted in the following table. This table has been extended to include the dimensions for the 5-inch rim recently adopted and for the 10-inch rim which is recommended for adoption. The ra-

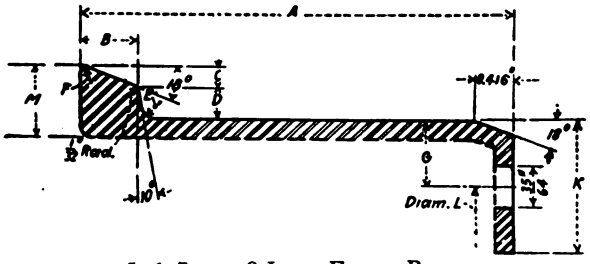

5, 6, 7 AND 8-INCH FELLOE-BAND

dius of the fillet for the 3 1-2, 4 and 4 1-2 straight-side rims has been increased from 3-32 to 3-16-inch owing to trouble which has been experienced with rims cracking at this point. Tolerances have also been placed upon the height of the 3 1-2-inch rim.

These revisions have been adopted by the Tire and Rim Association and are in accordance with present practice.

There was considerable discussion in the Standards Committee meeting relative to establishing in the standard a single set of rim and

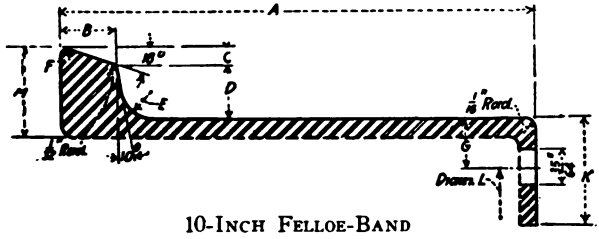

10-INCH FELLOE-BAND

felloe-band dimensions to provide for interchangeability of the 36 by 6, 38 by 7 and 40 by 8-inch pneumatic tire on a single rim, and also the interchangeability of this application on the wheel. This matter is to receive early consideration by the Tire and Rim Division and representatives of other automotive industries who are interested in this matter.

Pneumatic Tire-Rim Sections and Contours

Fig. No.	Nominal Tire and Rim Size.	Rim Diam. (Tire Seat).	Rim Circum. (Tire Seat) ±0.046.	A.	B. Nom.	B. Tol.	C.	R.	E.	F.	H.	K.	L. Nom.	L. Tol.	M.	O.	P.	S.	T.
1	30x3½	23	72.257	2.600	2.050	±0.046	0.275*	0.910	0.1400	0.3400	0.50	0.0780	0.5780	±0.008	0.680	.....	.....	.....	.....
2	32x3½	25	78.540	3.432	2.312	±0.046	0.560	0.840	0.1875	0.2500	0.32	0.5100	0.6870	+0.0125	0.367	0.1990	.....	0.0625	.....
	32x4	24	75.398																
	33x4	25	78.540	3.888	2.688	±0.046	0.600	0.840	0.1875	0.2500	0.34	0.5600	0.7800	—0.0075	0.440	0.2450	.....	0.0625	.....
	34x4	26	81.681																
2	32x4½	23	72.257																
	33x4½	24	75.398	4.380	3.120	±0.046	0.630	0.840	0.1875	0.3125	0.38	0.6150	0.8750	—0.0075	0.495	0.3030	.....	0.0625	.....
	34x4½	25	78.540																
3	34x5	24	75.398	5.310	3.750	±0.017	0.780	.....	.....	.....	....	0.6250	1.0625	±0.024	.....	0.4375	0.0940	.....	0.2500
	36x6	24	75.398	6.330	4.330	±0.017	1.000	.....	.....	.....	....	0.7187	1.2656	±0.024	.....	0.5469	0.1400	.....	0.2500
	38x7	24	75.398	7.000	5.000	±0.047	1.000	.....	.....	.....	....	0.7187	1.2656	±0.024	.....	0.5469	0.1400	.....	0.2500
	40x8	24	75.398	8.500	6.000	±0.063	1.250	.....	.....	.....	....	0.8750	1.5000	±0.031	.....	0.6250	0.1500	.....	0.3125
	44x10	24	75.398	10.330	7.330	±0.063	1.500	.....	.....	.....	....	1.2500	2.0000	±0.031	.....	0.7500	0.1875	.....	0.3125

All dimensions are in inches. *Tolerance of +0.016, —0.008 in. apply to this dimension.

Pneumatic Tire Felloe-Band Dimensions

Fig. No.	Rim Size	A	B	C	D	E	F	G	K	M	L Bolt Circle Diameter	Bolts (Fig. 3) Number	Bolts (Fig. 3) Length
1	5	2 23/32	15/32	0.153	¼	⅛	1/32	0.656	1⅜	0.558	21.375	8	3¾
1	6	3 7/16	9/16	0.183	17/64	⅛	1/16	0.688	1⅜	0.636	21.250	10	4½
1	7	4 9/32	9/16	0.183	17/64	⅛	1/16	0.688	1⅜	0.636	21.250	10	5¼
1	8	4 7/16	9/16	0.183	23/64	⅛	1/16	0.688	1⅜	0.729	21.000	10	5½
2	10	5 7/16	5/8	0.203	0.620	3/16	1/16	0.563	1¼	1.042	20.625	10	6½

Pneumatic Tire Felloe Band

An agreement has been reached among rim manufacturers for the dimensions of the 5, 6, 7, 8 and 10-inch pneumatic truck tire felloe bands, which are given in the accompanying tables. This proposal has

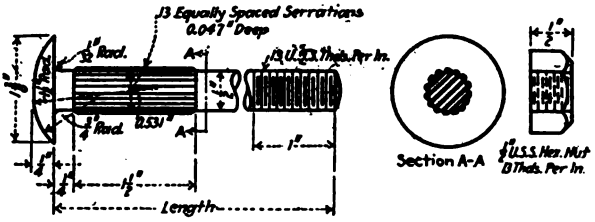

Rim Bolt and Nut

been accepted by the Tire and Rim Association and the Tire and Rim Division recommends it for adoption as S. A. E. standard.

Rim Size.	A.	B.	Width of Traction Plates
5	2½	⅜	1½
6	2½	⅜	2
7	2½	⅜	2½
8	2½	7/16	2⅞
10	3	⅝	3¼

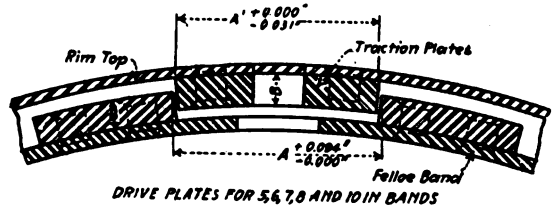

Traction Plate Dimensions

Note. Information recently received indicates that this report as approved by the Standards Committee should be modified as follows:

Dimensions A′ on the drawing are the same as A in the table and the tolerance on A′ should be plus 0.000-inch, minus 0.031-inch. The width of traction plate for the 10-inch rim should be 3⅛-inch.

British Rim Standardization

In 1920 a list of British rim and tire standards was issued by the British Engineering Standards Association at the instance of the British Rubber Tyre Manufacturers' Association. In consultation with the S. A. E. the American standard sizes have been added. The following schedules have been issued as an interim measure pending the revision of the British standard reports affected.

Plate 1.

BRITISH STANDARD

RIMS FOR CYCLES.

(WIRED TYPE.)

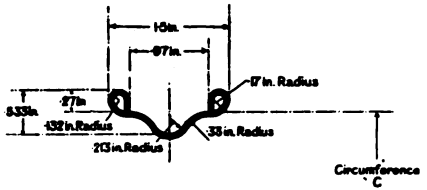

SECTION F.

Thickness ·032 in. (No. 21 S.W.G.).

Rim No.	Size of Tyre to Fit.	Circumference C.
	inches.	inches.
F. 2	22 × 1¾	62·000
F. 3	24 × 1¾	66·750
F. 9	25 × 1½	72·250
F. 10	28 × 1½	78·500
F. 12	26 × 1¾	70·625
F. 13	28 × 1¾	77·000

(BEADED EDGE TYPE.)

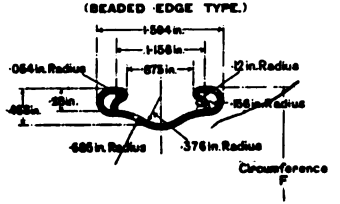

SECTION B.

Thickness ·032 in. (No. 21 S.W.G.).

Rim No.	Size of Tyre to Fit.	Circumference F.
	inches.	inches.
B. 4	26 × 1¼	73·500
B. 5	28 × 1¼	80·250
B. 6	28 × 1¾	78·5625

Plate 2.

BRITISH STANDARD

RIMS FOR MOTOR CYCLES.

(BEADED EDGE TYPE.)

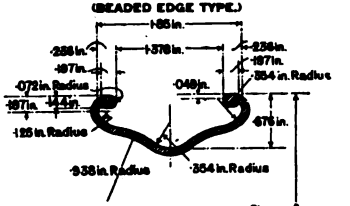

SECTION D.

Thickness ·072 in. (No. 15 S.W.G.).

Rim No.	Size of Tyre to Fit.	Circumference F.
	inches.	inches.
D. 1	24 × 2¼	64·174

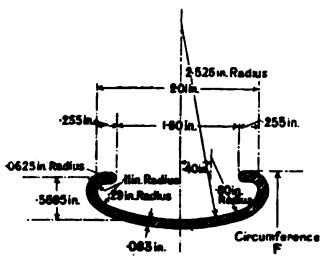

SECTION B.B.

Rim No.	Size of Tyre to Fit.	Circumference F.
	inches.	Inches.
B.B.	26 × 2¼ and 26 × 2½	71·261

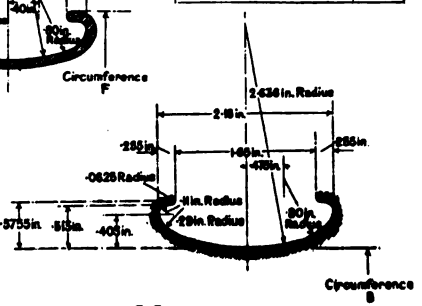

SECTION C.C.

Rim No.	Size of Tyre to Fit.	Approximate Circumference B	Rim Dia. at Tyre Seat.
	inches.	inches.	inches.
C.C. 1	26 × 3	68·832	20
C.C. 2	28 × 3	69·115	22

Plate 3

BRITISH STANDARD
RIMS FOR LIGHT CARS.
(BEADED EDGE TYPE).

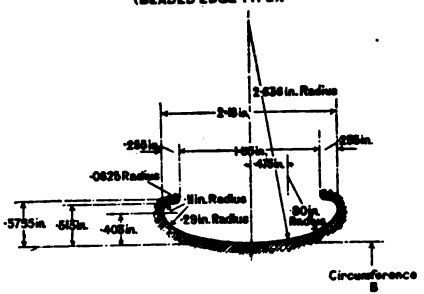

SECTION C.C.

Rim No.	Size of Tyre to Fit.	Approximate Circumference B.	Rim Dia. at Tyre Seat.
C.C. 1	inches. 26 × 3 and inches. 27 × 3½	inches. 62·832	inches. 20

This is the same as the Motor Cycle C.C. 1 Rim.

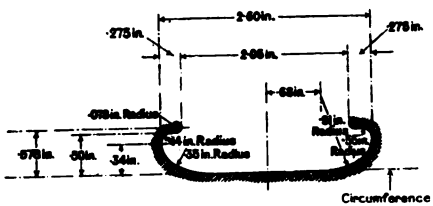

SECTION 28 L.C.

Rim No.	Size of Tyre to Fit.	Approximate Circumference B.	Rim Dia. at Tyre Seat.
28 L.C.	inches. 28 × 3½ and inches. 29 × 4	inches. 65·973	inches. 21

Plate 4

BRITISH STANDARD
RIMS FOR MOTOR CARS.
(BEADED EDGE TYPE.)

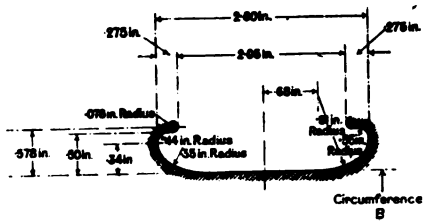

SECTION 30 B.E.

Rim No.	Size of Tyre to Fit.	Approximate Circumference B.	Rim Dia. at Tyre Seat.
30 B.E.	inches. 30 × 3½ and inches. 31 × 4	inches. 72·257	inches. 23

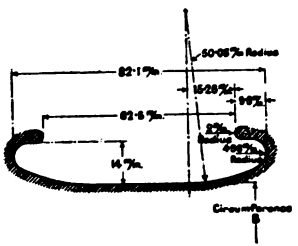

SECTION 815 B.E.

Rim No.	Size of Tyre to Fit.	Circumference B.	Approximate Rim Dia. at Tyre Seat.
815 B.E.	millimetres. 815 × 105 and millimetres. 815 × 120	millimetres. 1924	millimetres. 612·4

Plate 5.

BRITISH STANDARD

RIMS FOR MOTOR CARS.

(BEADED EDGE TYPE.)

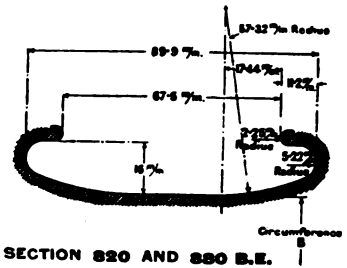

SECTION 820 AND 880 B.E.

Rim No.	Size of Tyre to Fit.	Circumference B.	Approximate Rim Dia. at Tyre Seat.
	millimetres.	millimetres.	millimetres.
820 B.E.	820 × 120 and 820 × 135	1780	566·6
880 B.E.	880 × 120 and 880 × 135	1980	630·2

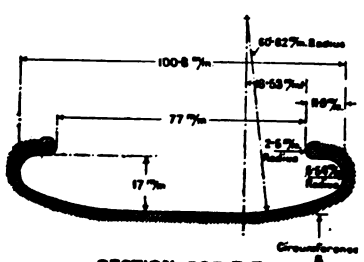

SECTION 895 B.E.

Rim No.	Size of Tyre to Fit.	Circumference B.	Approximate Rim Dia. at Tyre Seat.
	millimetres.	millimetres.	millimetres.
895 B.E.	895 × 135 and 895 × 150	1855	590·4

Plate 6.

BRITISH STANDARD

RIMS FOR MOTOR CARS.

(STRAIGHT-SIDED FOR WIRED TYPE TYRES)

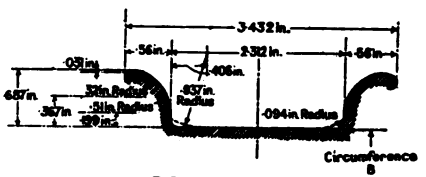

SECTION S.S. 32 ins. × 3½ ins.

Size of Tyre to Fit.	Approximate Circumference B.	Rim Dia. at Tyre Seat.
inches.	inches.	inches.
32 × 3½ and 33 × 4	78·540	25

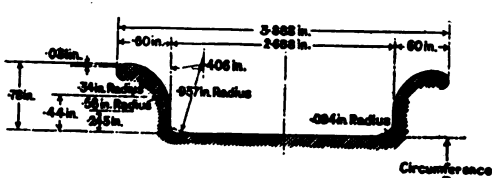

SECTION S.S. 32 ins. × 4 ins. and 33 ins. × 4 ins.

Size of Tyre to Fit.	Approximate Circumference B.	Rim Dia. at Tyre Seat.
inches.	inches.	inches.
32 × 4 and 33 × 4½	75·398	24
33 × 4 and 34 × 4½	78·540	25

Plate 7.

BRITISH STANDARD

RIMS FOR MOTOR CARS.

(STRAIGHT-SIDED FOR WIRED TYPE TYRES).

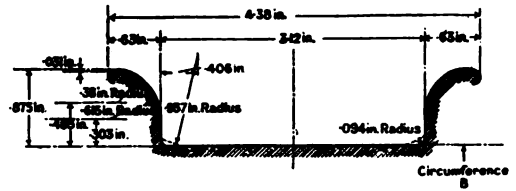

SECTION S.S. 33 Ins. × 4½ Ins. and S.S. 34 Ins. × 4½ Ins.

Size of Tyre to Fit.	Approximate Circumference B.	Rim Dia. at Tyre Seat
inches.	inches.	inches.
32 × 4½ and 33 × 5	72·257	23
34 × 4½ and 35 × 5	78·540	25

BRITISH STANDARD

RIMS FOR COMMERCIAL VEHICLES.

(STRAIGHT-SIDED FOR WIRED TYPE TYRES.)

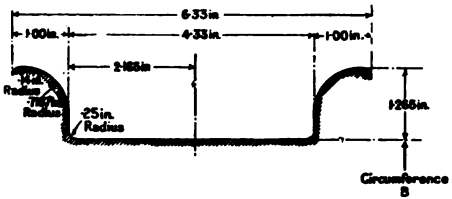

SECTION S.S 36 Ins. × 6 Ins.

Size of Tyre to Fit.	Approximate Circumference B.	Rim Dia. at Tyre Seat.
inches.	inches.	inches.
36 × 6	75·398	24

Plate 8

BRITISH STANDARD

RIMS FOR COMMERCIAL VEHICLES.

(STRAIGHT-SIDED FOR WIRED TYPE TYRES).

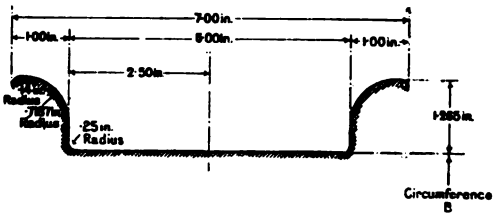

SECTION S.S. 38 Ins. × 7 Ins.

Size of Tyre to Fit.	Approximate Circumference B.	Rim Dia. at Tyre Seat.
inches.	inches.	inches.
38 × 7	75·398	24

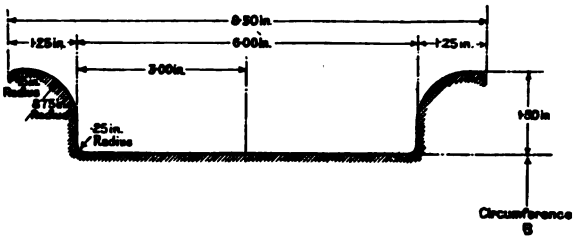

SECTION S.S. 40 Ins. × 8 Ins.

Size of Tyre to Fit.	Approximate Circumference B.	Rim Dia. at Tyre Seat.
inches.	inches.	inches.
40 × 8	75·398	24

CHAPTER XXXV

THE TIRE PUMP

Emergency Pumps

THE beginning was with the bicycle pump, held in one hand and worked with the other, followed by a larger pump held by the foot and worked with both hands. A few strokes were enough to fill a bicycle tire. The principle of these pumps was that of a simple cylinder and piston with a check valve. When the motor car with its large tires came in, this single-acting hand pump became wholly inadequate, for when geared for high pressure it took a

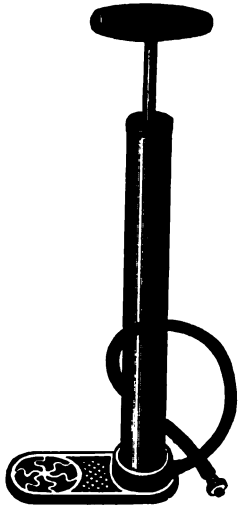

Cycle Tire Pump

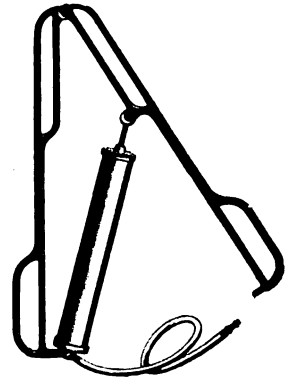

Gleason-Peters Portable Pump

long time to fill the tires. When geared for volume, it did the first filling easily, but the large piston would not deliver the necessary pressure. In consequence there was later developed a pump that was compound, or two-speed geared.

Great improvements have been made, however, in the design of single-cylinder single-acting pumps, and for small tires on light cars many of them are still in use. Different makes varying in size and minor details of construction but alike in principle are too numerous

to mention. For the most part their pistons have cupped leather washers. The Aertite pump is an instance of the metal piston with metal expansion rings ground to true bearings like an engine piston. Friction is thus reduced to the minimum and is the same whatever the air pressure. Pumping does not warm the barrel.

A convenient development of the single-acting principle is found in the Yankee and Inland pumps, which have a short, large-bore cylin-

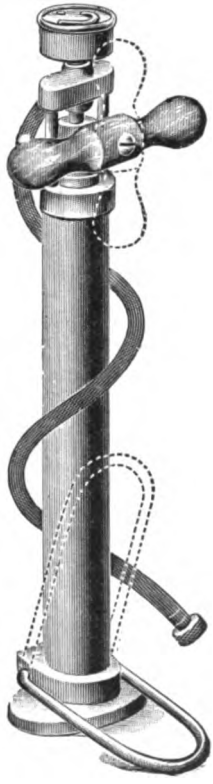

DEMO TIRE PUMP

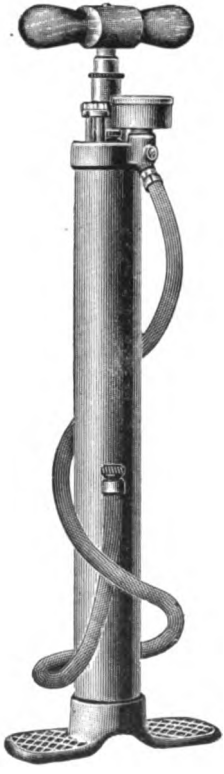

STAPLEY TIRE PUMP

der mounted on a metal frame which is quickly clamped to the running board of the car when needed for use. The pump is operated by means of to-and-fro strokes of a jointed hand lever 27-inches in height which gives a 7 to 1 leverage. The operator stands erect and the motion is much less fatiguing than the vertical movement of the ordinary pump. When not in use the device folds compactly for the tool box. Eight feet of flexible hose and a pressure gage are part of the equipment.

Foot-Operated Pumps

The Twombly, Peteler and Wood-Milne are foot-operated single-action pumps utilizing the weight of the body and a simple easy leg motion to render high leverage on a short large-core cylinder very effectively. These pumps are mounted in a frame casting and the foot

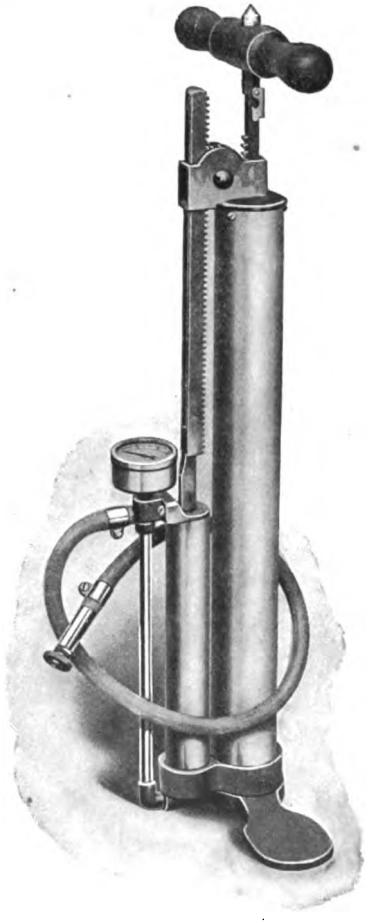

Wray Automobile Pump

lever folds down upon it very compactly for packing in the tool box. They require no fastening to the car, but are simply laid upon the ground or floor for use. Every time the lever is depressed by a downward step upon it a spring brings it up again ready for the next stroke. The ease of operation is remarkable. The Wood-Milne pump

has a pressure gage, and the action of the Peteler is unique in that when the foot lever is depressed the barrel of the pump is brought forward at the same time the piston is pushed forward into the pump.

Compound Hand Pumps

Most automobile hand pumps for medium and large tires are now made compound, or double geared, combining a large and a small cylinder, the large one driven by the down and the small one by the up

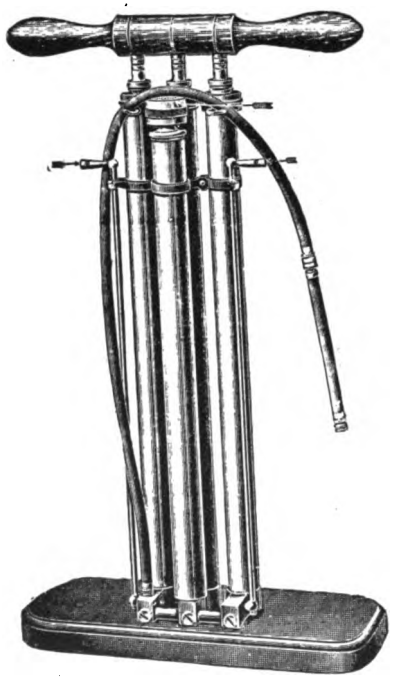

Triple Pump—English

stroke. Each has its own check valve, and either may be disconnected. Some of the more expensive compound hand pumps of large capacity have three and even four cylinders of graduated size.

The Globe "Dead Easy" tire pump combines the principles of the running board lever action type with those of the double action garage hand pump with vertical cylinders. It clamps to the running board of the car and is operated by the to-and-fro motion of a high jointed lever. It is a two-stage pump, capable of developing 300 pounds pressure. There are two pairs of large cylinders with small cylinders

above. Each pair has a two-stage piston, the two pistons being connected by means of links to a pivoted rocker arm operated by the hand lever. When the lever is moved to the right, the right-hand piston travels downward while the left-hand piston travels upward, forcing the air from the large cylinder through a connecting tube into the opposite small cylinder and producing the first stage of compression, which never exceeds 40 pounds. On the reverse movement of the lever, the left-hand piston travels downward, while the right-hand piston travels upward, forcing the air out of the small upper cylinder and producing the final stage of compression.

Because of the link and rocker arm construction, producing a toggle action, each piston travels rapidly at the beginning of its stroke, when the load is very light. As the stroke advances and the load increases, the travel is slower. As the stroke is finished and the load is greatest, the three pivoting points are brought into a straight line, developing an enormous leverage just at the time when most needed.

Garage Hand Pumps

For use in the small repair shop or home garage it is customary to use a single action pump, but with a lever for horizontal instead of up and down strokes, making it much more powerful, and bringing the most leverage to bear at the point of greatest pressure. These are sometimes double acting, but with cylinders of the same size. It is claimed that with them a 5-gallon tank can be pumped to 60 pounds in 3 1-2 minutes. Five gallons is about the capacity of the average automobile tire. A 36 by 5 inch tire at 90 pounds pressure will require about three times this time to fill. The largest hand pumps will deliver about 36 cubic inches at a stroke. At high pressures they are very irksome, indeed.

Another type of garage hand pump, of which the Peerless four cylinder pump is an example, is built very much like a gasoline engine with pistons operated by a crank shaft revolved by a hand crank. It is also constructed for electric drive by a small motor.

Engine-Driven Pumps

The engine-driven tire pump has become recognized as the ideal way to inflate tires on the road. It is regular equipment on several high-grade passenger cars and large pneumatic tired trucks, and may be readily applied to any car not so equipped. As some of the pump makers advertise, it is foolish for a man on pleasure bent to exhaust his strength on a pump, when he has 20 to 60 or more horse power lying idle under the hood, and at moderate expense can have a pump

that will inflate a tire in two or three minutes. In the case of trucks operating on giant tires requiring from 100 to 140 pounds air pressure an engine-driven pump is absolutely necessary.

There are numerous ways of applying the power of the engine to an air pump. Most of the engine driven pumps on the market are geared to the crank shaft where it protrudes from the crank case in front and are controlled by a sliding pinion gear shift. Other pumps are driven by a gear on the water pump, magneto or fan shaft, by an extension shaft from one of the timing gears, or by a friction wheel against the fly wheel. There are also small gearless detachable pumps carried in the tool box that, when needed, are driven from the front end of the crank shaft through the starting crank hole.

For a time it was asserted that the use of engine-driven pumps had a damaging effect upon tires, the claim being that air gets hot during compression; that power pumps of the engine-driven type, operating at high speed, send air into the tire quite hot; and that as the air in the tire cools the pressure falls, sometimes as much as 20 pounds. Exhaustive scientific tests have shown, however, that with a properly cooled power pump, air goes into the tire at virtually the same temperature as the outside air, whereas the air from a hand pump is from 30 to 40 degrees higher than the temperature of the outside air, the difference being due chiefly to the greater radiation of heat from a hose 10 to 15 feet long than from one only 1 1-2 to 2 feet long.

Most engine-driven pumps resemble a miniature engine in construction, having from one to four air-cooled, cast iron cylinders, pistons with expansion rings, screened intake and exhaust valves, bronze connecting rods and bearings, a crank shaft with throws or a straight shaft with eccentrics, etc. They are carried on a bracket on the motor and take their drive from any convenient shaft. Normally, the gear on a pump is out of mesh with the gear on the shaft. When it is desired to inflate a tire the gears are slid into engagement by means of a short lever on the pump shaft. Some 10 or 15 feet of air hose connect the pump with any of the four tires on the car, and a pressure gage or automatic valve is provided.

Most of the single cylinder pumps of this type have pistons of relatively large diameter and short stroke. The Stewart pump has regulation crank shaft and connecting rod. The intake and outlet valves being spring actuated ball checks. To prevent the escape of oil past the piston one way and air the other, there are one large piston ring and a unit of five small rings. The Benn, Advance, Manzel and Sanford pumps are generally similar. The Manzel pump has a safety

valve that may be set for the desired pressure. When this is reached all excess air escapes through the valve. There is also a two-cylinder Manzel pump for large cars. The Sanford pump employs a method of packing by means of a ring inside the pump so constructed that it can be adjusted from the outside.

Both intake and exhaust valves of the Cassco pump are of the poppet type. The intake valve is automatic and allows the air to enter the cylinder the instant the piston begins the intake stroke. Lubrication is supplied by the splash system and a felt lubricator which distributes to all working bearings. Three piston rings prevent oil leakage into the tire. The Kellogg, also a poppet valve pump, has two connecting rods, one each side of the piston guide, which gives them longer life. Lubrication is by the splash system. The piston has two rings and a baffle plate prevents any oil reaching the upper side of the piston. A ring of felt packing around the case of the pump is compressed by the piston on each down stroke, forcing oil into the piston rings, which also lubricates the cylinder wall.

The J. M. pump has crank shaft and connecting rod, but uses an asbestos packing ring instead of the usual metal expansion ring, and graphite grease lubrication eliminates all danger of oil getting into the tire. No pressure gage is furnished, but an automatic pressure relief valve opens when the tire pressure is sufficient and warns the motorist that inflation is complete.

The Peerless and Juleco are typical of the engine-driven pumps specially designed for Ford cars and taking their power from the forward end of the crank shaft. The Peerless is operated from the outside by pulling a rod. It is unnecessary to raise the hood, stop the engine or remove any parts. A thumb screw pushes the gear of the Juleco pump into mesh, and a whistle gage gives warning when the desired tire pressure is reached.

The Aero pumps are made in one, two and three cylinder models and in principle are much like the foregoing. The splash system of lubrication is used and an oil separator is provided between the outlet valve and the tire connection. An automatic blow-off valve, which can be set for any desired pressure, automatically exhausts when this pressure is reached. Two styles of gear shifts are provided, the eccentric and the sliding. The sliding action brings only the sides of the teeth into engagement at the first contact, while the eccentric action brings the whole width of the face of the gears into engagement at once, and makes it possible to start the pump at practically any engine speed.

The Stewart four-cylinder pump for large cars and trucks is made in two types, water cooled and air cooled. The pistons are driven by four eccentrics on a straight shaft instead of the usual crank shaft with throws. On these eccentrics the circle ends of the connecting rods bear. Each piston has two expansion rings, and lubrication is by the splash system with an oil separator in the pipe line. The air intake to the cylinders is through a row of screened ports uncovered by the piston at the bottom of its stroke. At the top of its stroke the air is forced out through a valve of the ordinary spring type centrally placed in the cylinder heads. The outlet connection is over one of the end valves, a passage being drilled through between the four posts. A crank handle is supplied so that the pump may be bolted to the running board of the car and operated as a hand pump if desired.

The Taylor and Detroit are instances of the small gearless detachable tire pumps which, when needed, are quickly clamped to the front end of the crank shaft through the starting crank hole under the radiator, a long air hose with pressure gage extending to the tire. Near the top of the cylinder-like casing a rubber diaphragm is vibrated up and down by means of a mushroom shaped piston on an eccentric connecting rod working around the shaft of the pump which is connected with the engine crankshaft. The air is sucked in through a small poppet valve in the cover on the down stroke and forced out on the up stroke as the diaphragm is also forced up. A ball check valve in the outlet prevents the air from backing up. As the air is sucked in and forced out on the same side of the diaphragm, and the connecting rod bearing on the other side of the diaphragm is the only lubricated part, no oil can find its way into the tire.

The DeLaunty tire pump and crank is a unique device to replace the conventional starting crank. Within the crank handle is a single cylinder pump its piston with expansion rings being operated by a crank shaft within the hollow shaft of the starting crank. The pump is connected to the engine shaft by means of a round knurled nut which slides inward and engages the dogs of the shaft end with a sliding shaft by means of a clutch, so that the pump operates only when the clutch is engaged.

Designed to replace certain parts of the fan apparatus, the Advance-Ford pump performs the function of tightening the fan belt, as does the fan support on the Ford, and the pump frame carries a shaft replacing the regular fan shaft or journal stud. To one end of this special shaft is fastened the fan, to the other end a driving pinion is secured. This pinion engages with a steel spur gear supported by an

eccentric bearing, so that it is possible for the pump to be engaged or disengaged with the driving pinion. The gears are of a ratio of 2 to 1. By use of the double-end two-cylinder pump the maximum driving load is one-half that of the single cylinder of the same volume, and the required power is divided into two impulses per revolution.

The piston is driven by a yoked connecting rod with a straight line drive. With the connecting rod five times the length of the stroke the pressure of the pinion against the cylinder walls due to the angularity of the piston rod is greatly reduced. To prevent oil reaching the tire the piston has three expansion rings at each end. The cylinder is lubricated by means of wicks located in the middle of the body. All other parts of the pump are oiled direct. By making the intake ports as narrow as possible and securing ample port area by length the effective length of the stroke is increased. The valves, consisting of two quarter-inch balls retained by light springs, are located at the end of the piston stroke.

The Beartone combined fan, horn and tire pump includes a single cylinder pump with piston and expansion rings operated by worm gear drive off the fan. There is no crankshaft, the connecting rod attaching to a boss on the driving gear. Lubrication is by a wick oiler so that no spray reaches the tires. The pump is started by pressing a lever, the gear on the pump engaging another on the fan. With the hose an automatic gage is supplied which admits to the tire only the pressure for which the gage is set. The device can be mounted on the fan bracket in ten minutes.

Some engine pumps are driven by a friction wheel held against the flywheel or the engine shaft. The simplicity of this principle appeals to many. Occasionally a pump is found which rests upon the ground and receives its power from the engine through a flexible shaft or torsion cable.

Maxfield's tire inflator was an early instance of this type consisting of an air compressor and an air chamber, the former being driven by friction from the flywheel or clutch of the motor.

The Herz Tandem pump is a portable pump with removable wood handle that is carried in the tool box. When needed it is operated by simply holding the friction wheel against the revolving surface of the engine flywheel, using the chassis frame as a fulcrum. This pump consists of frame or casing which carries the drive wheels on one end and surrounds the pump barrel on the other, and the pump mechanism proper. The pump mechanism consists of the barrel, piston, piston rod and drive wheels. The barrel has two ports cut into it at the crank end

to admit air, and is provided with an opening at the opposite end to exhaust the air. The piston has two rings, and the piston rod is of the usual form. The drive wheels are arranged as follows: On the axis of the lower wheel are two small rubber faced drums which are in frictional contact with the two drive wheels in the semi-circular part of the casing. These latter are connected by a crank which drives the piston rod, the crank being so shaped as to clear the lower drive wheel at the outer stroke. All wheels are faced with rubber to insure good contact. Bearings support the drive wheel axles, the lower wheel bearings being eccentric, so that by the partial revolution of the bearing all wear may be taken up. Each of the other wheels runs on its own

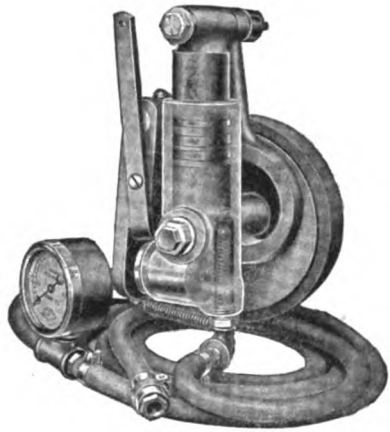

TEN EYCK ENGINE-DRIVEN PUMP

hollow spindle, which bears in a corresponding side of the casing, thus allowing the use of the crank mentioned before.

The act of connecting the Ten Eyck pump hose with the tire, if there is any pressure at all in the latter, brings the piston wheel of the pump into contact with the flywheel of the engine and the pump begins to work automatically. As soon as the desired pressure is obtained, which can be read on the gage, forming part of the device, the hose is detached from the tire valve, which automatically throws the pump out of contact. If the tire is completely deflated, it is necessary only to touch the starting lever to throw the pump into contact, and the pressure keeps it here.

The Universal is a single-cylinder, friction-drive, air compressor with leather-covered friction wheel. The cylinder is held by the hous-

ing and has air cooling ribs about its sides and in its extreme end contains the ball delivery valve. The piston has two iron rings, no leather packing being used. The housing of the pump swivels on a bracket and when in use is pressed with the friction wheel against the flywheel by a spiral spring. A special lever allows the pump to be lifted off the flywheel when not in use.

The P. T. C. single and two-cylinder tire pumps are driven from the flywheel of the engine through a fibre friction pulley on the crank shaft of the pump. The mechanism is mounted on a sliding base connected with a thumb screw which moves it forward or backward, and the base is bolted to the vehicle where operation of the thumb screw will bring the friction pulley into contact with the engine flywheel. The pistons have two iron rings, no packing being used. The crank case encloses the entire mechanism and protects it from dirt.

Spark Plug Pumps

One of the ingenious early methods of utilizing the automobile engine for inflating tires consisted in tapping one of the engine cylin-

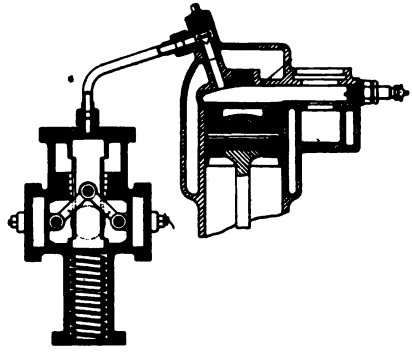

Michelin Apparatus for Inflating Motor Tires

ders over the compression space. A flexible tube from this tap led to any one of the tires. By shutting off the gasoline from this particular cylinder and running the engine, the compression stroke in this tapped cylinder delivered any desired amount of air at high pressure in a very little while. The cylinder thus became an air pump of great capacity. This device had the additional merit of being cheap, costing no more than the ordinary hand pump. Some modifications of this principle did not shut off the gasoline, but let the cylinder run as usual and fill the tire or tank from the exhaust gases.

Both of these types have been used with a hub attachment which allowed the tire to be filled without even stopping the car. The idea was to deliver air or exhaust gas to the tire faster than it could leak from an ordinary puncture, so that it would not be necessary to make tire repairs on the road. An automatic pressure regulator prevented the pressure rising above the desired limit; and by interposing a water jacketed tank, the air or exhaust was delivered to the tires cool, which is important, very ingenious but hardly practical.

These devices led to the development of the impulse or spark plug pump, which screws into the spark plug hole of one of the engine cylinders and is operated by the suction and compression of the engine piston, but takes a supply of pure cool air directly from outside rather than through the engine cylinder and passes it under compression through the air chamber of the pump to the tire without contamination by oil, gasoline vapor or exhaust gases from the engine cylinder.

Pumps of this sort, of which the Skinner Pneu-Flator, Marvel, Dewey and National are typical, consist of two superimposed cylinders of varying diameter with a double-ended two-diameter reciprocating or floating piston working between them. The lower and larger pump cylinder has an open threaded connection at the bottom for screwing into the spark plug hole of the engine cylinder, and through this channel the alternating compression and suction of the engine piston are communicated to the reciprocating piston of the pump. Air is admitted and exhausted from the smaller upper cylinder only, and there being no connection other than the piston rod between the upper and lower pump cylinders no gasoline or oil vapors are carried into the tire.

Compression from the engine cylinder enters the lower cylinder of the Skinner Pneu-Flator through the small channel at its base which is threaded for screwing into the spark plug hole. This compression forces the floating double ended piston upward until the air in the upper pump cylinder enters the air pocket and the upward stroke of the piston is stopped by means of the wrist pin. In forcing the lower piston up the air contained in the upper or smaller cylinder is compressed, the upper end of the piston being provided with a leather cup washer. The compressed air is forced out of the spring controlled valve to the right and through the coil pipe extending spirally down to the centre casting, emptying into the tire hose union and thence to the tire.

On the downward stroke air is taken into the upper cylinder through the spring controlled valve at the left. Free access to the open air is provided by holes in the top of the outer shell. The suction

developed by the engine piston pulls the lower pump piston down until the upper half of the air cushion plunger enters its socket in the piston and pneumatically stops the downward movement.

Air to charge the engine cylinder, working as a primary compressor to operate the pump, is admitted through annular holes controlled by an automatic one-way valve. This charging of the compressor cylinder is necessary, because the firing cylinders of the engine are operated with the throttle nearly closed. This reduces the power of the primary compressor in proportion to the air admitted to it.

The Pioneer, a British impulse pump, operates on the compounding principle, air being admitted first to the lower cylinder, then passed to the upper cylinder, compressed there and thence forced into the tire.

Near the top of the lower pump cylinder is a series of holes drilled in the walls through which pure outside air is drawn. The large piston working in this lower cylinder also has a number of holes in it, the collective area of which is less than the collective area of the holes in the wall of the cylinder, so that on the downward or suction stroke of the engine piston, while air passes straight through the pump into the engine cylinder, there is always a sufficiently greater pressure above the pump piston to force it down to the bottom of its stroke, and the large cylinder is full of pure air. On the upward stroke of the engine piston, compression from the engine cylinder enters the lower pump cylinder, a spring controlled breather valve closes the holes in the lower pump piston, which is thus forced upward in its cylinder, the valve preventing any gasoline or oil vapors in the engine cylinder from passing the engine piston. As the latter travels upward a valve between the upper and lower cylinders opens, being carried up by frictional contact with the rising piston rod until it abuts a perforated plate above it, and the air in the lower cylinder is forced and drawn into the top cylinder. This air is then forced past the cupped leather washer of the small piston on the next down stroke, and on the next up stroke is forced past the spring controlled ball valve in the top of the pump to the tire through flexible tubing equipped with a pressure gage. An important function of the breather valve is to break the vacuum of the engine cylinder and reduce to the minimum any suction of gasoline vapor from the carburetor manifold.

The Brown impulse pump is made like an engine with metal piston rings, works on the compounding principle and it is especially handy to attach, being used in connection with a special quick detachable spark plug which lifts out with a quarter turn. The pump then drops in and seats with another quarter turn. No wrench is required.

A feature of the Utility impulse pump is the Pneu-Meter, a pump connection pressure gage and blow-off valve which acts as a convenient handle in applying the hose to the tire valve. By rotating the outer sleeve of the Pneu-Meter, the valve is set to the tire pressure desired. When this pressure is reached the air passes from the pump to the open air with a hissing sound.

The Audindau, a French impulse pump, consists of an air cooled cylinder, which is screwed into one of the spark plug holes of the motor and the spark plug is screwed into a threaded hole in this fitting. Within the pump cylinder there is a floating piston which is forced to the upper end of the pump cylinder when an explosion occurs in the motor cylinder. The air in the upper end of the pump cylinder is then forced through the spring controlled delivery valve and a hose to the tire which it is desired to inflate. During the next suction stroke of the engine piston the pump piston descends in the pump cylinder, partly owing to its weight and partly owing to the suction beneath it. While the piston moves downward the spring controlled inlet valve opens and air enters the upper end of the pump cylinder. After the tire has been fully inflated the pump is unscrewed from the motor cylinder and the spark plug put back in place.

The Woodward impulse pump has two heat insulated handles on opposite sides by means of which it can be detached after use without burning the hands or using a wrench.

Automatic Tire Sustaining Pumps

Several rather curious automatic pumps have been designed to keep a punctured tire inflated until the completion of the trip, thus obviating the necessity of making a tire change on the road.

One ingenious idea was a pump driven by the road wheel itself. The pump screwed directly to the wheel spokes, with an eccentric fitting over the hub. The pump revolved with the wheel, the eccentric arm being held fast by a cord from the mud-guard. The piston was thus driven by the turning wheel, and the tire inflated while running, the air being fed in faster than it leaked from the puncture.

The Barrie pump revolved with the wheel and was attached to it at the hub and at two spokes. It was operated by a radial plunger the end of which came in contact with the road when the tire was partially deflated. The pump piston was provided with a plunger terminating at its outward end in a knob or pad, and was normally kept at the bottom of its stroke by means of a spiral spring within the pump barrel. When the tire softened the pad came in contact with the

ground as the wheel revolved, forcing the piston upward and sending air into the tire through a flexible tube connecting the pump barrel with the tire valve stem. As the wheel further revolved the piston and plunger were forced outward by the spring within the pump barrel, and the operation was repeated when next the pad came in contact with the ground, until the tire was inflated so that the wheel was correspondingly lifted and the plunger rendered inoperative until the tire needed further inflation.

The Barnfather, a British pump, was designed to be attached to the outside of a wheel hub. The principal component parts were a disc, an outer frame, and a ventilated dust cover. The disc carried upon it two small air compressors with phosphor bronze pistons, the big end bearings of the connecting rods being pivoted on pinions that engaged with internally cut teeth on the gear ring of the frame. The disc was fastened by means of three quickly detachable arms to the road wheel of the car, and consequently turned with that wheel. The frame was encircled by a fibre-lined band brake to the outside of which was attached, by means of two bolts, a semi-circular stirrup. From the centre of this stirrup ran a torque rod, which passed through a socket screwed to the under side of the running board of the car, and when the end of the rod was in the socket it was impossible for the band brake—and, normally, the frame held by this brake—to revolve. When the road wheel turned, therefore, and the plate rotated with it, the air compressors were brought into action.

A delivery pipe common to both cylinders was connected by means of stout rubber tubing, provided with a safety pressure release, to the valve of the tire to be inflated.

By means of the brake the tire inflation could be limited to any desired pressure. When the pressure reached the desired point the brake slipped and the pumps ceased operation. Ordinarily the pump was carried in the tool box of the car and when one of the tires punctured it was put in place, which, it was claimed, could be done in half a minute.

The Molkenbur automatic pump for maintaining tire pressure is a little device within the tire depending upon the resiliency of rubber for its operation. A block of soft vulcanized rubber with molded air chamber, air passages and valves is placed between the inner tube and casing, and cemented to the former. The depression of the tire casing and the resiliency of the rubber block jointly pump air into the tire. A safety valve prevents over-inflation and relieves excessive expansion due to heating.

Hub Operated Pumps

Another form of power pump for emergency use on the road or in the home garage takes its power indirectly from the engine of the car, being operated by attachment to the hub of one of the rear wheels, the wheel being jacked up for the purpose. The differential gearing in the rear axle permits of a free action of the jacked-up wheel, while the other rear wheel remains stationary.

The Rung Automatic pump is a standard Skinner compound foot pump so arranged as to be readily adjustable to any automobile hub. It is fastened to a permanent bracket attached to the under side of both running boards, just forward of the mudguard, being held in place in this bracket by a cotter pin, which may be removed and the pump transferred to either rear wheel at will.

The piston end of the pump is attached to a crank fitted to the hub of the wheel by an adjustable screw clamp. Twelve feet of hose makes it possible to pump up any one of three wheels of the automobile. When it is desired to pump up the rear wheel that has been used for motive power, it is necessary only to transfer the pump to the opposite rear wheel and attach the hose to the one that has been used in pumping up the others.

The Bergstrom pump is attached to one of the rear wheel hubs and operated by the motor while the wheel is jacked up, the pump being held from rotation by means of an anchor chain attached to a screw hook on the running board of the car. It is a two cylinder pump with a double piston and only one crank bearing. Aside from the intake and exhaust valves there are only three moving parts, the double piston, the connecting rod and the crank. The double piston gives a very long bearing on the cylinder walls, which reduces friction when pumping against high pressure. Instead of the ordinary crank shaft an eccentric disk is used which is provided on its outer side with four adjustable leather faced jaws and a binding chain for attaching the pump to the hub. The other side of the disk forms one race of an annular ball bearing, the other race of which is integral with the cylinder casting of the pump. The pistons are fitted with two rings at each end and the discharge valves of the pump are of the same spring controlled type as those on gasoline motors. Air is admitted through screened port holes in the cylinder walls at the end of the suction stroke.

Garage and Repair Shop Pumps

In most tire repair shops and garages a stationary engine or electric motor is needed for several purposes, and this is often utilized to

operate a small pump or air compressor piped to a receiving tank or air reservoir. The increasing use of compressed air in small volume for various purposes, such as cleaning machines and cars, operating pneumatic jacks, starting gas engines, inflating tires, and many other small undertakings has furnished the incentive for the design of numerous small power driven compressors, most of them of the single cylinder, air cooled type, resembling a gasoline motor in construction, with piston, crank shaft, connecting rod, flywheel and spring-operated intake and outlet valves.

The Curtis air compressor, here shown, is typical. It is provided with a special splash-oiling system that prevents oil from entering

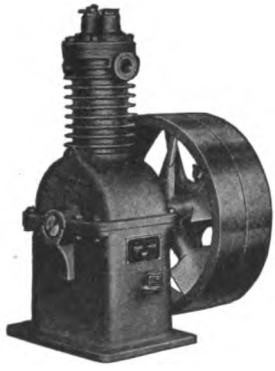

CURTIS AIR COMPRESSOR

DUNN HYDRO COMPRESSOR

BLACK & DECKER PORTABLE PUMP

the cylinder, thereby avoiding the presence of oil in the air supplied to the tires. Other features are: high and low level oil-filling gages that indicate the amount of oil in the crank case; flywheel in fan for cooling the cylinder; inspectable valves; hand unloader facilitating starting compressor under tank pressure, and a head that is easily removed.

Other compressors of similar design include the Gardner, Au-To, Ohio and Mascot.

Four-cylinder air compressors like those provided on high grade motor cars are also used in repair shops and garages where they are operated by a belt from the stationary engine or motor countershaft.

The possibility of oil being carried into rubber tires with the air when a power driven air compressor is used, may be obviated by the use of a compressor operated by water pressure. The Dunn Hydro air compressor here shown will deliver clean air at any desired pressure, no reducing valve or other device being used. The makers claim that the standard compressor will deliver 40 cubic feet of free air per hour at 105 pounds up to 110 pounds, at water pressure of 75 pounds; 30 cubic feet with 56 pounds of water; 27 cubic feet of free air with 50 pounds of water. All air pressure same as first named.

For dispensing free air for tire inflation many garages, repair shops and gasoline stations are using the curb box air stations manufactured by several firms. Within the door of an attractive cast iron stand, properly lettered, is located the air hose, pressure regulator, gage and fittings extending below ground for connection with a compressor and air tank, which may be located within the garage on the basement or main floor. The box is installed on the sidewalk near the curb. The Lipman is of this type, while the Hale-Christy is entirely below ground with a lid flush with the surface of the curb. Lifting the lid automatically opens a valve and puts the air pressure on the hose, while lowering it shuts the air off. With the Curtis Correct Pressure filling station, a controlling handle is moved along a dial until a pointer indicates the size of tire to be filled, when the device automatically inflates the tire to correct pressure and no more. The Ruff automatic tire pump is a nickel in the slot device for use with electrically driven pumps and storage tanks, automatically closing the supply valve as the pressure in the hose diminishes on its removal from the tire valve.

To secure the convenience of portability an air compressor operated by a small electric motor is often mounted with an air reservoir tank on a three-wheeled truck, forming an efficient pumping outfit which may be pulled to any part of the garage which is accessible to an electric light plug.

For example, the Black & Decker portable air pump consists of a one-half horse power electric air compressor, having a capacity of two cubic feet of free air per minute, together with a cylindrical pressed steel reservoir, 14 inches by 30 inches, mounted on three wheels and provided with a handle, so that the whole can be wheeled about as circumstances require. The reservoir holds sufficient air at one filling to inflate five average tires from flat to full pressure or ten tires from 40 to 80 pounds. The outfit is complete with switch, electric cable, attachment plug, pressure gage, safety valve, 25 feet of hose, tire connector, and all necessary piping and wiring. The motor operates on

alternating current of 60 cycles or less and direct current. The motor, gear train and compressor are enclosed is one housing. The motor and compressor are cooled by forced circulation of air through this common housing, and the motor, gears and compressor, including cylinder walls and piston, are grease-lubricated.

Other similar portable compressors with tanks are the Imperial, Gardner, Leader, Master, Aaling, Herz, Lipman, Brunner, Lectroflater, Kellogg, National, United States, Northern and Eureka. Most of these pumping outfits have an automatic controller which maintains air pressure in the tank at any desired pressure from 110 to 150 or 200 pounds so long as the motor is connected with the electric current.

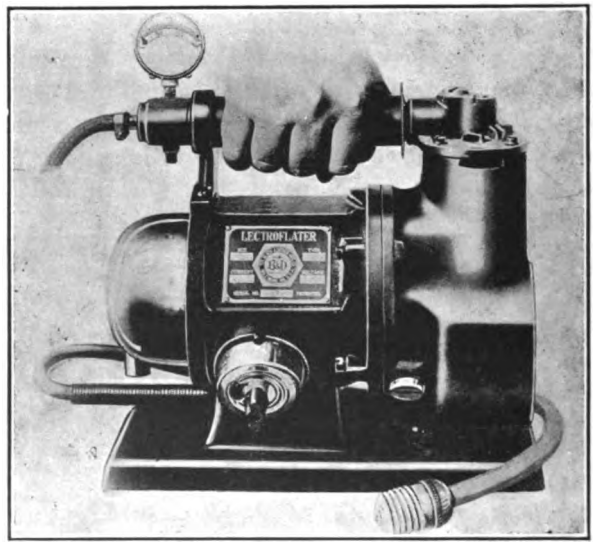

PORTABLE LECTROFLATER

For the small repair shop and home garage a smaller outfit dispensing with the air reservoir is provided, only the one, two or four-cylinder pump and a 1-4 or 1-2 horse power electric motor being mounted on the three-wheel truck with handle, air hose, pressure gage, etc. While most of these outfits are portable, the Lipman, Kellogg, Lectroflater, Fero and Guco pumps are also made in stationary types to mount on a shelf or bench. Most of them pump air direct into the tire as wanted, although the Lipman, Gardner, Brunner, Master and Little Giant pumps supply it through a small cast iron tank some six by twelve inches in size which is a condenser or separator with an in-

genious interior arrangement for freeing the air from oil and moisture by precipitation or absorption.

The Imperial, Lectroflater, Overholt, Abell and Gardner are among the well-known single-cylinder pumps. The Lipman, Guco and Kellogg have four cylinders, while the United States, Little Giant, Fero, Mayo, Master, Brunner and another Kellogg type have two cylinders.

Lectroflater is a light, easily operated and efficient machine of the hand-portable type. The two-piece cast-iron housing encloses the motor, gear-train and the compressor cylinder, forming an air-jacket

CARRIAGE LECTROFLATER OUTFIT

through which air is circulated by an enclosed fan. The piston and connection rods are of aluminum alloy and the piston is fitted with six ground piston rings. The poppet type valves are of brass with ground seats. The internal gearing, cylinder and shaft bearings are grease lubricated by positive systems.

The smallest machine has a capacity of two cubic feet of free air per minute, sufficient to inflate a 34 by 4 tire from flat to 80 pounds in 1 3-4 minutes.

The carriage outfit shown in the illustration is a larger size Lectroflater mounted on a strong, light carriage that is provided with a convenient tool tray and equipped with four rubber-tired wheels.

This outfit has been especially designed to meet the demand of public garages, tire sales rooms and other public places which must dispense free air, but wish to avoid the larger investment, higher operating expenses and loss of space required by large compressor and tank systems.

Each machine is fitted with a long electric cord attachment plug, gage, high-pressure hose and quick-acting coupling. It will operate

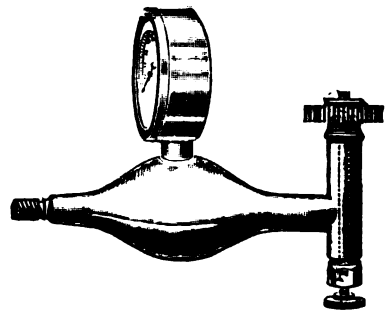

WRAY PRESSURE REGISTER

from any 110-volt lamp socket, either alternating or direct current, and is guaranteed to develop 125 pounds air pressure without overheating. It has a displacement of about 2 1-2 cubic feet of air per minute and will inflate the largest tire to 100 pounds pressure in one or two minutes.

PRESSURE INDICATORS AND REGULATORS

Pressure indicators or regulators are, of course, necessary on all power pumps, and they are coming to be used on all hand pumps as

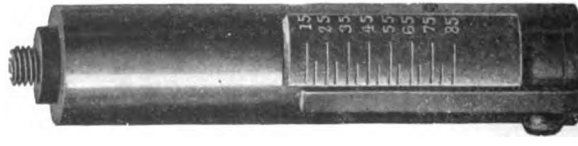

LOCK-SWITCH PRESSURE INDICATOR

well. The ordinary pressure gage, which is attached to the pump and registers with every stroke, is apt to become strained and disordered much sooner than one which is protected from the pump stroke and only registers the actual pressure in the tire. Very few gages are really accurate, or remain so for long. Consequently several makers

have abandoned the dial gage in favor of the pop valve or safety valve. The pressure on the outside of the tire valve is generally higher than that within, or the air could not be made to enter. As a consequence, few tires are pumped as hard as the dial indicates; though, if the error is constant, it doesn't really matter. The safety or pop valve seems to be the best principle for power pumps, since the action is automatic, and the tire cannot be inflated beyond the desired pressure. These attachments are referred to more fully in the chapters on tire valves and tire accessories.

Pump Connection Pressure Gages

Several pump connections for attachment to tire valves in inflating tires combine pressure gages and automatic releases for excess air pressure.

The "Pop Off" gage, for example, has an indicator which is set at the desired amount of air pressure and the air line or pump is

"Pop Off" Gage

attached and started. When the pressure reaches the point at which the indicator is set the surplus air exhausts.

The Pneu-meter and Nurinkle gage are similar in principle and both exhaust all excess air pressure with a shrill hiss that can be heard for some distance and serves as a signal to indicate that inflation has been completed.

The general principle on which these valves work is well shown by the Schroeder patent. In the following drawing, the upper is a sectional view and the lower one a side elevation of this device.

The gage being connected to the tire valve stem at *A*, the tube *B* is attached to the air supply, and the barrel *C* adjusted to the desired pressure on the scale shown in the lower figure. When this pressure is reached the air acts on the piston, comprising a tubular member *D* and an annular member *E*, forcing back the spring *F*, and causing the valve

G to move away from the valve *H*. This allows the air to escape between them, and to flow through the opening *I* and the sleeve *J*, causing the whistle *K* to indicate that the desired pressure has been reached.

The left-hand drawing of the Hansen pump connection and tire pressure indicator is a front elevation showing the valve and pressure indicating dial. Referring to the central drawing, the end of the tire valve is attached at *A*, and the gage part *B* is forced down by hand to the position shown in the drawing on the right. Thus the stem *C* will unseat the pin in the valve, and air from the tire will pass upward around the stem, through the opening *E* and into the gage, which will indicate the tire pressure on the dial. If additional air is required the manual pressure is removed from the dial and the air pressure raises the gage to the position shown in the central figure. Then air

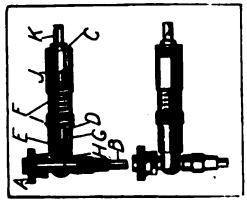

SCHROEDER VALVE

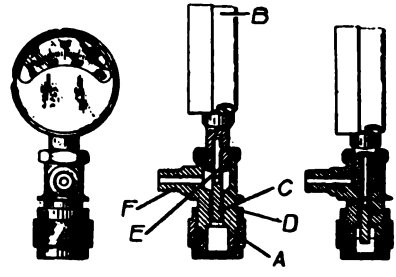

HANSEN PRESSURE INDICATOR

from the source of supply freely passes through the opening *F* into the central opening, and thence through the valve into the tire, the pressure being sufficient to unseat the valve.

PUMP AND AIR LINE CONNECTIONS

In order to facilitate the attachment of pump and air line hose to the tire valve several different improved pump connections have been brought out.

Schrader's automatic inflating valve for use in garages and service stations is covered with rubber to protect it from injury and at the same time prevent it from scratching or injuring the body of the automobile near which it may be used when inflating tires. An automatic feature guards against the escape of compressed air, if for any reason the supply is not cut off when the use of the valve has ceased. This valve is made in four sizes from 5-16-inch to 1-2-inch, and a patent has been applied for on the device.

The Warner automatic air valve makes it possible to fill a four-inch tire to the proper pressure in fifteen seconds. It is positive in action, closing and opening instantaneously, and as it is free from springs and other small parts it is not liable to derangement. By simply pressing it against the valve on the tire the outlet is opened and a second valve nearer the tube is automatically closed, completely preventing the slightest leakage when not in use. The greater the pressure the tighter the valve will hold.

Schrader's Universal pump connection may be attached to any pump. It screws on to the end of the rubber tubing of the pump, and connects with the tire valve by means of a simple swivel-nut. In combination with the contact with the tire-valve, is a deflating pin which permits of the pressure in the tire being taken while the pump is still attached to the tire in operation.

The motorist pumping up a tire will thereby be saved the labor and annoyance of detaching the pump from the tire to test the degree

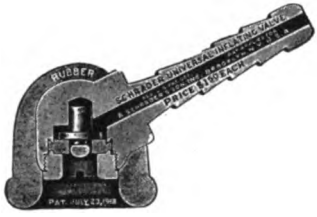

SCHRADER INFLATING VALVE

ROMORT PUMP CONNECTION RUBBER

of its inflation and of re-attaching it in case the tire is found to need more air.

It is equipped with regular check valves so that in no way can there be any leakage when the pressure gauge is applied.

The Romort Automatic air valve is a garage air line connection that has only one moving part and absolutely cannot get out of order. The Romort tire tester attachment will fit any valve now in use. The purchaser is required to buy only this tire tester attachment, inserting his Schrader gauge and hereby having a complete outfit with the gauge in handy position beside the air line connection valve.

The Romort air pump connections will not blow off the tire valve nor turn inside out, due to the unique design of the little rubber gasket here illustrated.

The Hansen hose connection is so designed that a quarter turn of the knurled sleeve makes a positive connection—no matter whether

the thread on the valve is in a damaged condition or not. It gives a quick connection and never leaks.

The Hansen automatic air valve is designed for use in garages, tire service and gasoline filling stations. By pressing the valve on the tire stem, the air automatically flows into the tire. When the valve is removed, the air automatically shuts off. The valve is instantaneous in action and does not leak.

Rubber washers do not come in contact with the tire stem and so last indefinitely. The detachable stem can be replaced at any time without the expense of purchasing a new valve.

For use in vulcanizing shops and tire manufacturing plants a similar valve having a straight connection to the hose is recommended.

Another model works on the same principle, except that it is two valves in one; being designed so that either side may be used when inflating tires.

With the Elkins hose clamp the hose to be connected is slipped over the metal nipple of the clamp. The four hinged arms are then

ELKINS HOSE CLAMP

folded over the hose and the ferrule is screwed down over these arms, which are thus securely impressed into the hose, forming a tight joint.

AIR BOTTLES

One of the early devices to obviate the task of ordinary pump inflation of tires on the road was the air bottle, which was attached to the under side of the running board of the automobile like the Prest-O-Lite gas tanks for the acetylene headlights of ten years ago. Of these

the best known were the Goodyear and Michelin air bottles. They were steel cylinders charged with compressed air and equipped with a hand valve, pressure gage and air hose. When it was desired to inflate a tire it was necessary only to attach the hose from the bottle to the tire, open the valve and allow the tire to fill to the required pressure.

Gas Inflation of Tires

The question as to whether air is the best inflation medium for tires is most interesting. Certainly when engine exhaust is used much besides air enters the tire. Indeed, it contains much besides nitrogen, carbon monoxide and dioxide and steam, though these are all that are usually mentionel. As a matter of fact, there are also present lubricating oil and unburned gasoline vapor, neither of which is good for the tire.

This brings up another point; namely, the effect of different gases upon rubber. Almost from the very beginning of experimenting with rubber, it has been well known that many gases and vapors had a decided effect upon it, and that pure rubber would freely absorb and transmit all gases, with a facility depending upon the character of the gas, the temperature of the rubber, and on other circumstances.

Grosheintz found that tubing of black rubber transmitted coal gas freely, while common gray rubber, heavily compounded, was only slightly permeable. Tests of various kinds of tubing showed that the purest rubber is the most permeable. Other persons have found that some gases are absorbed much more rapidly than others, though the reason why may not be known. Hydrogen passes through most easily, probably because it is the most impalpable of the gases; carbon dioxide, which is far heavier than air, passes through a rubber membrane about twenty times quicker than air, when the rubber is at about 70° F., but neither carbon dioxide nor hydrogen will pass through, when the rubber is at or below the freezing point of water. Air does not begin to escape through rubber until the temperature of the latter reaches 70° or 80°, and passes through more readily as the rubber is heated. At high speeds, a rubber tire gets too hot to bear the hand, and at such temperature air escapes to an appreciable extent through the inner tube.

It must be remembered that air is made up of about 21 parts oxygen and 79 parts nitrogen, mechanically mixed. Of these two gases, the oxygen passes through rubber far more quickly. After several refillings of the same tire, the contents will be found to be almost pure nitrogen. The oxygen, in passing through, also unites with

the rubber, to some extent, increasing the adhesive principle in the rubber at the expense of the elastic principle. In other words, the rubber becomes short, and the tire tube bursts under a sudden strain. Nitrogen, on the other hand, is the most inert of gases and will hardly pass through rubber at ordinary temperatures. It is for this reason that after a tire has been pumped up several times, the pressure will be maintained for a much longer time than originally. It would seem best, therefore, if one could choose his filling, to have his tires blown up with nitrogen. This result might be approximated, however, by filling with air, if one were careful not to let his tires become wholly deflated. On the theory that it is only the oxygen which escapes, if one were careful to keep his tires well pumped, there would soon be virtually nothing in them but nitrogen, since each increment of air is about four-fifths nitrogen, and the oxygen is constantly leaking out.

Thus the question whether tires should be inflated with gas or air is still an open one, if by gases one means nitrogen or carbon dioxide. If the cylinder exhaust is to be used, it would be better to first run it through water, which is an easy matter.

Compressed air still remains the universal cushioning medium for pneumatic tires, although commercial attempts have been made to popularize the use of carbon dioxide and hydrogen. Some of the tire bottles formerly on the market contained carbon dioxide under pressure.

The manufacture of liquified carbon dioxide is a regular business. Liquified carbonic acid gas in tanks is supplied in enormous quantities to soda fountains, and the manufacturers were eager to sell to automobilists. When it is remembered that a gallon of this liquid will fill two or three dozen big automobile tires, it is easy to see why CO_2 was urged as a competitor of air and put up in small containers especially for the use of motorists on the road. Carbon dioxide was suggested, of course, because it is one of the easiest gases to liquify, and because it is comparatively inert. Chlorine and like gases would be easier to liquify, but they would almost certainly attack the compounding ingredients of the rubber.

It has been stated that carbon dioxide has a deteriorating effect on the rubber, but this has not been sustained. A rubber tire is porous and the length of time it will hold air varies inversely with its porosity. Even the best tires, however, will show a much greater leakage of the carbon dioxide than they would were air alone used.

The Diamond Rubber Co. made comparative tests to show the rate of escape of air and carbonic acid gas, respectively, from pneu-

matic tires. On October 14 at 1:30 p. m. three tires were pumped up with air to 100 pounds pressure, and three similar tires were inflated with carbonic acid gas to the same pressure. On October 21 at 1:30 p. m. the air filled tires are said to have registered 92 pounds each, and the three gas filled tires, 41, 50 and 51 pounds, respectively.

One device for the inflation of tires with carbonic gas, The "Improved Baby" tire inflator, was equipped with a special regulator for controlling the pressure of gas and a gage for recording the pressure which ensured its perfect control. The cylindrical tank, which was attached to the running board of the automobile, contained the gas liquified under high pressure. Opening the valve permitted its immediate re-assumption of the gaseous form, accompanied by the development of approximately the pressure required for its liquifaction. The tank held about four pounds of the liquified gas, about three ounces of which would expand into sufficient gas to fill a completely deflated tire of average size to 70 pounds pressure; consequently a tank would fill over 20 tires from complete deflation without any effort on the part of the owner, or effect about 100 ordinary pumpings, all that was necessary being to connect the hose with the tire valve and turn on the gas.

IMPROVED BABY TIRE INFLATOR

It was claimed that owing to the fact that the gas contains no free oxygen, its action on the rubber of the tire is distinctly preservative, and as it is the most effective fire extinguisher known to science, quenching almost instantly a stubborn gasoline flame, its usefulness is manifold.

The Sioco Inflator was a British equipment consisting of a box containing two carbonic acid gas bottles with valves, gage and connecting hose.

M. Drouilly, a French inventor, has devised a process for inflating automobile tires with hydrogen generated by the decomposition of water under the influence of specially prepared aluminum. Aluminum in granular form is used, which, while giving rise to a less energetic reaction than aluminum powder, is nevertheless sufficiently active, and it keeps down the temperature increase and makes the manipulation easier.

Drouilly makes use of the well-known air bottles once commonly used for the inflation of pneumatic tires. After unscrewing the bronze cap he introduces into such a bottle of 3 litres capacity, 300 grams of granulated aluminum and 300 grams of water. Upon replacing the cap, 375 litres of hydrogen are generated, which are compressed to a pressure of 150 atmospheres (2,500 pounds per square inch) in the remaining space of 2 1-2 litres. The precipitate, consisting of alkaline earths, may be easily washed out. In order to do away with the addition of potassium hydrate, or similar alkaline compound, Drouilly adds a few grams of pulverized bichloride of mercury to the aluminum, which is sufficient to start the reaction.

The pressure within the air bottle may rise as high as 1,000 atmospheres, depending upon the amount of the reacting substances used, so that great care is necessary in handling the apparatus. In an experiment, in which the necessary safety measures were taken, a tube which had been tested to 600 atmospheres was exploded by this process, and some of the splinters of the bottle were found at 50 yards from the point of explosion. A safety valve which will prevent such mishaps is essential. It is most important to add a sufficient amount of water, in order that the resulting rise in temperature does not vaporize the water, as in that case the steam pressure would be added to the gas pressure and an explosion would result.

This novel process permits of utilizing the empty steel air bottles which otherwise would represent only dead weight. It is also claimed that hydrogen will not pass through the walls of the tire as readily as air. It is said that the diffusion of a gas through rubber walls depends upon the point of liquifaction. Hydrogen has a very low temperature of liquifaction, and diffuses, therefore, very slowly through a rubber wall.

CHAPTER XXXVI

VALVES FOR PNEUMATIC TIRES

Early Bicycle Tire Valves

SOME kind of valve is, of course, essential to the use of inflated tires; but the requirements are simple, and most valves on the market do their work fairly well. The valve idea is very old, and those used in inflating various rubber articles were practically perfected 80 years ago or more. In its outward appearance, the valve used by Thomson in 1845 for his pneumatics looked very much like those used now. In fact, the tire valve can hardly be said to have a history, so far as our purposes go.

The bicycle tire valve grew out of the older air cushion type, and the automobile valve is merely an enlarged bicycle valve. In early years practically all the valve improvements came from Germany.

Before the bicycle was largely displaced by the automobile, little was heard about valves. The Schrader valve was universally used on bicycle tires, in America; consequently, there was no general education in the merits of this or that valve, as was the case in every other feature about a wheel. It sometimes became necessary to have another valve put in, but this job was generally given to a regular repairer, without instruction on this point.

Valve Troubles

As a rule valve troubles are not the fault of the valves themselves. Such troubles are generally due to the tire creeping and straining the joint with the tube, and real valve failings are generally caused by punching things against the plunger or by leaving off the cap, allowing dust and dirt to spoil the contacts. Occasionally, however, the spring will go wrong, or the rubber washers will soften and become enlarged. Valve insides can always be bought separately, however, and can be inserted by any handy man. Valve insides for the Schrader Universal valve, the most widely used type in America and standard equipment for the United States Army, are the same and will fit any Schrader valve body, whether used with bicycle, motorcycle, passenger automobile or airplane tires. For 6-inch and larger truck tires a special valve inside is provided capable of withstanding a pressure of 150 pounds or more.

Valves were formerly expected to leak a little, but the rubber washer in the cap practically stops this. The plunger or valve cone will also stick, sometimes, and has been known to freeze tight; but it is seldom difficult to release the plunger, and if frozen, a few strokes of the pump will warm the air enough to thaw it out. It has been the experience with many valves that they keep the air out as well as keep it in, especially in the case of automobile valves. When the spring is

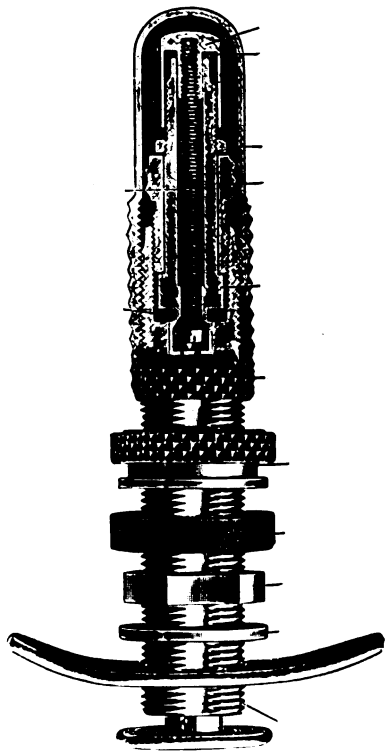

MACINTOSH VALVE—ENGLISH

tightened too much, it may require considerable effort to drive the air in past the check. Most people want 70 or 80 pounds pressure in their tires, and factory tests indicate that many valves require a pressure of 50 pounds to open the check and drive the air in through the narrow, winding passages in the body of the valve. Thus, the valve and the friction in the pump itself often double the work of inflating. This does not mean much in pumping a cycle tire, but it is a serious consideration when it is necessary to force 90 pounds of air into four 37

by 5 inch tires, such as are used on many touring cars. Here is where the power pumps come in. When the use of a hand pump is necessary, it is possible, in many valves, to lessen the work by unscrewing the valve seat and check. It is rather a pity, too, to depend to any extent upon the valve cap to help hold in the air, but nearly all valves have this failing.

Typical Automobile Tire Valve Description

The typical tire valve consists of a metal tube which fits air tight in a rubber tube vulcanized to the inner surface of the air tube of single tube bicycle tires, or secured to a hole in the rubber valve base

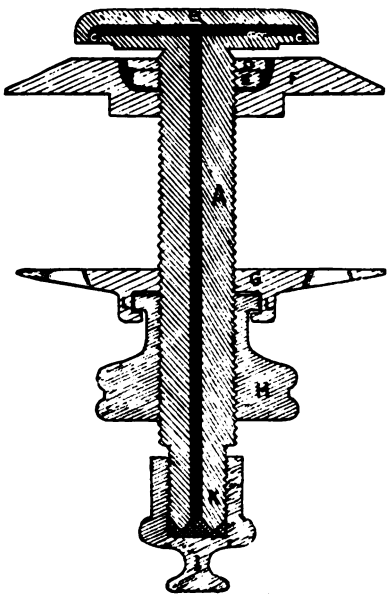

Dunlop Valve—English

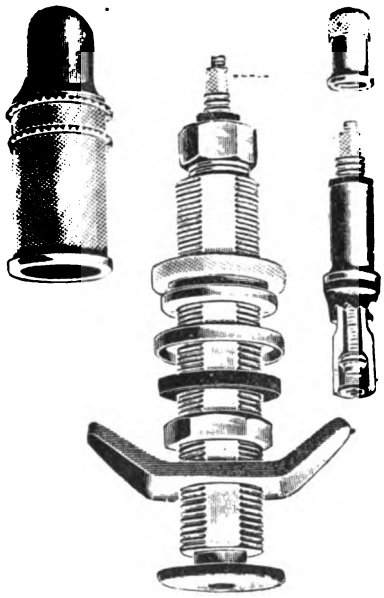

Berlin-Frankfurter Valve—German

of automobile, motorcycle and clincher bicycle tire inner tubes by means of washers and a nut threaded on the outside of the valve stem. The inner tube is clamped between the base and the grooved under surface of a combination ring and bridge washer by screwing a hexigon nut down tightly, which, if properly done, will prevent leakage at the valve hole in the tube. Some manufacturers use a combination ring washer and spreader varying in width, length and shape according to the size of tire to prevent the beads of the casing from pulling at the inner tube around the valve base. A rim nut with leather washer

above the felloe of the wheel, also threaded on the outside of the valve stem, serves to set the valve properly and thereby prevent creeping of the tube, at the same time closing the valve hole in the rim, thus preventing dirt, water or oil coming into contact with the inner tube and causing damage. It also provides a seat for the dust cap, likewise threaded on the outside of the valve stem.

The metal tube or valve stem which is the body of the valve, has in it a valve seat screwed into position, the seat having an air passage through it. At the inner end of this air passage is the check, which is really the valve proper, valve being merely the Latin for a door.

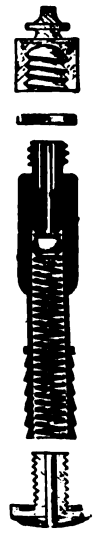

FLEUSS VALVE

This check may be a cone, a flap, or a ball, or any other device for automatically closing the opening. Sometimes the pressure of the air inside is relied upon to close the check, but it is generally customary to have a little spring to bear upon it, so that the air passage will remain closed until the pressure from without is greater than the combined pressure of the spring and the air inside. The check, of course, is the critical point in the whole valve design, and it is not easy to make the contact so true that no air escapes. It is usual to have one of the contact surfaces of some yielding material, like rubber or leather, these being the washers or gaskets. For fear some of the air might leak around the valve seat, another washer is used where it screws into

the valve tube. Then again, lest some of the air might get by the check, owing to the contact being broken by particles of dust, or to a slight unevenness in the surface of the washer, the cap, which is screwed over the outer end of the air passage, is generally provided with a washer, which is screwed down tight over the opening.

The standard valves follow, in the main, the principles outlined. There have been others of a radically different design, nevertheless. A disadvantage in the standard valve type is the fact that it necessitates cutting a hole for it through the rim. This weakens the rim, in the case of bicycles, but it is not much of a factor in the case of automobile rims. Valves have always been a source of trouble, however, in the case of tires creeping. Precautions are needed to prevent this, or the valve stem will be strained or torn off the tube. In the case of single tube tires, this trouble is particularly feared, leaks around the valve stem being hard to heal.

Valveless Tires

To meet these difficulties, several makers, for instance the Clark Cycle Tire Co., made valveless tires. In order to fill them, a hypodermic needle was stuck into the tires, and air forced through. Small self

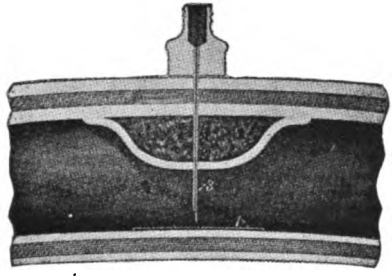

Clark Valveless Inflator

sealing pockets were introduced into the tire at one or more places during its construction. The needle was thrust through at one of these, the spongy substance inside acting as a valve when the needle was withdrawn. Several valves have also been made, designed to enter the tire on the side, thus obviating the necessity of boring through the rim, and avoiding the dangers from tire creeping. One of these side valves, known as the Pickett "all rubber" valve, attracted considerable attention, on account of the boldness of the idea and the simplicity of its design. In principle it was a rubber rivet, with an elastic stem,

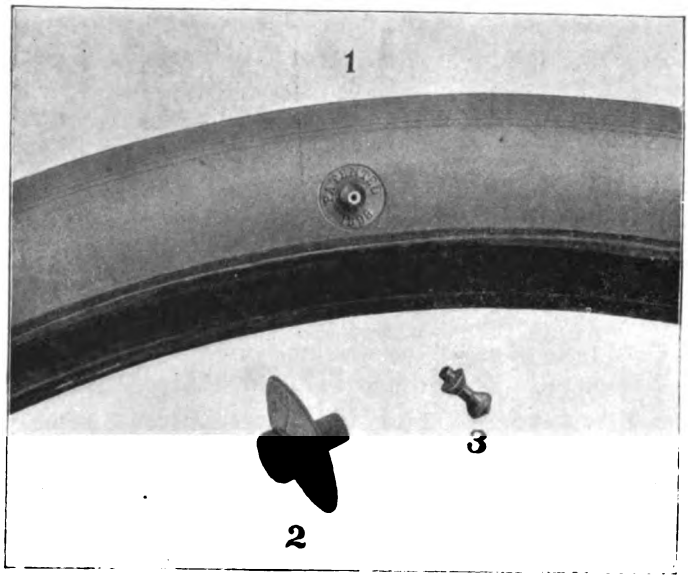

PICKETT ALL RUBBER VALVE

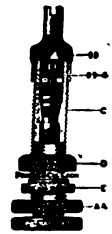

Schrader Universal
G. & J. SHOE VALVE
No. 1022

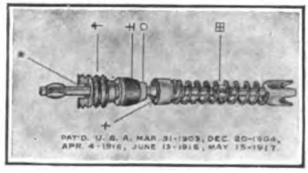

SCHRADER VALVE INSIDE

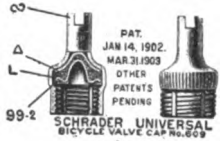

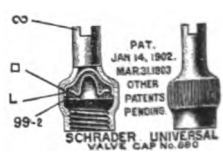

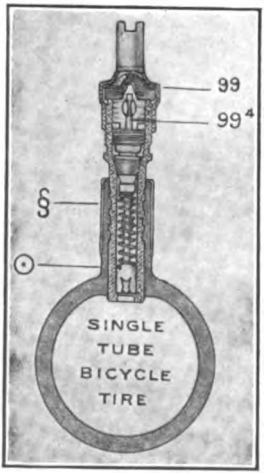

SCHRADER BICYCLE VALVE

Schrader Universal
DUST CAP

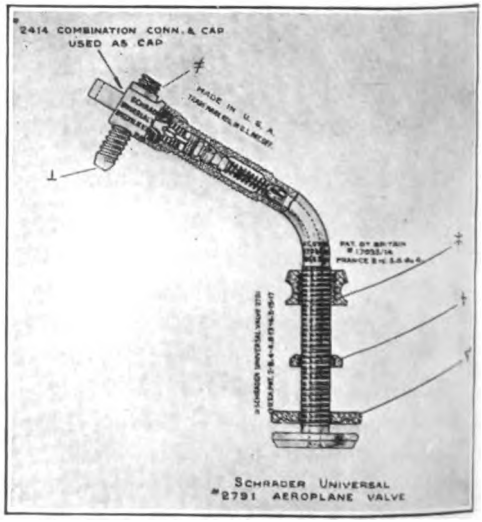

SCHRADER UNIVERSAL AEROPLANE VALVE

whose tension held the inner head or button tightly over the opening. When inflating, the outer head was drawn aside, and the nozzle of the pump thrust in alongside the elastic stem. The principle was ingenious, but this valve never came into extensive use.

Schrader Valves

For ordinary automobiles the No. 725 Schrader valve is most commonly used for 3 1-2 to 5 1-2 inch tires. For 6 inch and larger

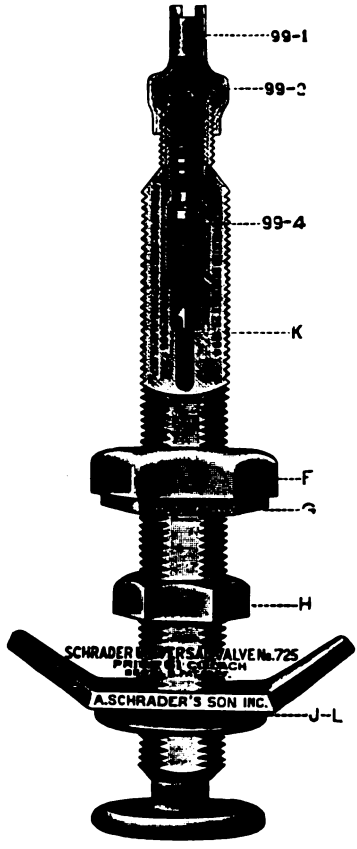

Schrader Motor Tire Valve

motor truck tires, the No. 2033 A. Schrader's Son, Inc., valve is extensively used. It is the same length as the No. 725 valve, but has a 1¼ inch diameter base. For airplane tires the United States Army is using the No. 2791 valve having its body so bent as to bring

the outer extremity of the valve in the center of the hand hole of the windshield over the wheel, the angle being such that the valve does not project beyond the shield when used with a valve cap and pump connection enabling the aviator in foreign service to inflate his tires by means of the ordinary European cycle pump, should conditions arise where an American pump would not be available.

For all single tube bicycle tires in the United States the No. 609 Schrader valve is standard equipment. Palmer and G. & J. tires require special valves. The No. 609 valve is forced into the rubber air

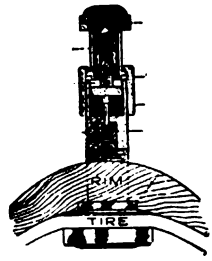

PALMER VALVE

nipple or cot of the tire and an air tight joint effected by contracting a metal ferrule about the shank of the valve by means of a special machine.

Should the tire creep and partly or entirely cut away the rubber nipple at the base, the tire may be repaired by substituting a repair valve, after the removal of all of the rubber nipple protruding beyond the surface of the tire. For a small tear the No. 610 valve has a round base, and for a large tear there is an oval base valve. The base is inserted through the hole in the tire and the washer above forced down outside and clamped firmly in place by screwing down a nut threaded to the outside of the valve stem.

The special valve for G. & J. bicycle and motorcycle tires has a round base and is fastened in the valve hole of the inner tube in the same manner as the single tube repair valves just mentioned. A hexigon nut is always tightened against the rim after the tire has been mounted to prevent "creeping" and to close the valve hole in the rim.

OTHER VALVES

In addition to these standard valves numerous unique variations of the valve principle have been developed with more or less success.

In the Sladden valve instead of using the usual conical friction stop gap to prevent air leakage, a rubber washer is forced against the air inlet by the pressure of the air in the tube.

The complete valve includes a hollow stem, in which is an internal chamber; a removable hollow-centered plug, mounted in the stem and extending into the chamber; a closure valve, that sets across the central passage of the plug and has an annular flexible flange extending across the joint between the plug and the stem. A cap screws over the top and can be inverted so that a post in its center presses down the plunger and allows the air to escape through port holes in the side of the cap.

The spring in the chamber has an extension running down into the stem that keeps it in a vertical position. Ample space is allowed for the passage of air around the valve when it is released. A rubber cushion in the cap presses against the top of the plug and securely seals the valve against leakage.

An automatic safety tire valve that "whistles when it's had enough" air has a large hole through the valve stem, from end to end.

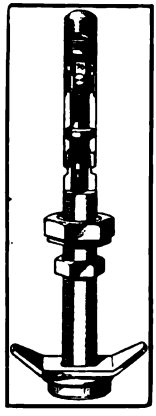

WHISTLER VALVE

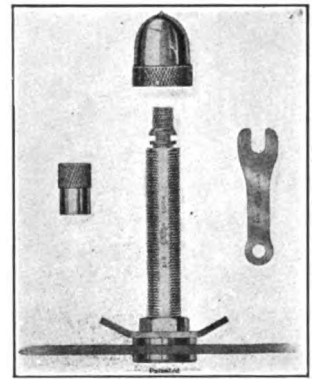

AIR-LOCK VALVE

The inside or check valve seats on top of the stem and is held securely in place, making an air-tight seal by the joining of the stem with the pressure regulator. When sufficient air has been pumped into the tire, a whistle announces the fact, from which the name of the device is derived—the "Whistler."

The Air Lock tire valve is so constructed that it locks the air in the inner tube for an indefinite length of time, until the tire suf-

fers a blowout or puncture. This valve may be used with any cap, nut, or cleat.

The use of a new inner tube is always recommended, but an old one which is known not to leak may be used. It is claimed that a permanent degree of pressure may be maintained within the tire by means of this valve, which tends to increase tire life and mileage. The centers of these valves are interchangeable. Five standard sizes are available, for wire, disk, and artillery wheels—2, 2 1-2, 3, 3 1-2 and 4-inch.

A tire valve, called the "Newsom" is so constructed that it does not depend alone on the air pressure against the valve gasket to hold

NEWSOM VALVE

the air in the tube, but has an additional protection against the possible escape of air, in a cap nut which is screwed to the upper end of the stem and by which the valve gasket is drawn firmly against the valve seat at the base of the housing, thereby sealing the valve and holding at a constant standard pressure the air in the tube. The gasket at the base of the valve is of rubber. The tire is inflated by removing the dust cap, unscrewing the cap nut, and adjusting the air hose in the usual way. In order to replace the cap nut, it is only necessary to screw it on tightly with the fingers. Pliers should not be employed for this purpose.

European Valve Equipment

Bicycles, motorcycles and aeroplanes used in Great Britain, France, Italy, Continental Europe, and other parts of the world except the United States and Canada have, to a large extent, been fitted with the Woods type cycle valve: Fig. 1 on bicycles and motorcycles, and Fig. 2 on airplanes.

The pump thread of the Woods valve is smaller in diameter and has a coarse, high pitched thread. The check consists of the valve plug – with rubber sleeve /. The air enters the tire through a hole in the valve plug at /, by forcing the inner wall of the rubber tube / away from the valve plug – sufficiently to allow it to pass into the tire. The rubber sleeve must be made of very fine rubber and therefore it is

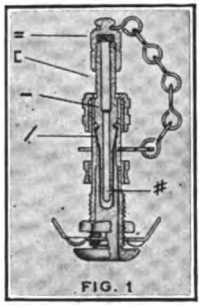

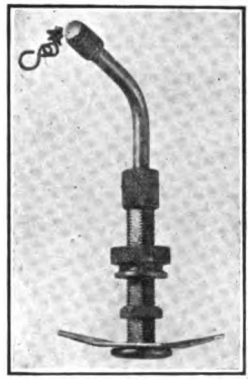

Woods Bicycle and Airplane Valves

very delicate; the rubber rapidly deteriorates at the point where it is clamped between the valve plug and the inner wall of the valve stem.

The construction of the Woods valve is such that whenever a tire must be removed from the rim to repair a puncture, or for any other cause, the valve plug must be taken from the valve stem as the plug cap will not pass through the hole in the rim. Whenever this is necessary the rubber sleeve invariably tears, and, therefore, after the puncture in the tire has been repaired the valve stem must also be repaired by putting on a new rubber sleeve.

In order to meet the European demand for American standard valves, there has been designed a valve plug fitted with the Schrader universal inside, sliding plug cap, combination valve cap and foreign pump connection. The valve plug illustrated is suitable for use with Woods valve stems in tubes and tires on bicycles, motorcycles and light

cars, and the bent valve plug illustrated is suitable for use with Woods valve stems in aeroplane tires. These valve plugs may be used without any chance of injury to the tire or tube as might occur in a great many instances were the valve stem removed. The great advantage of using

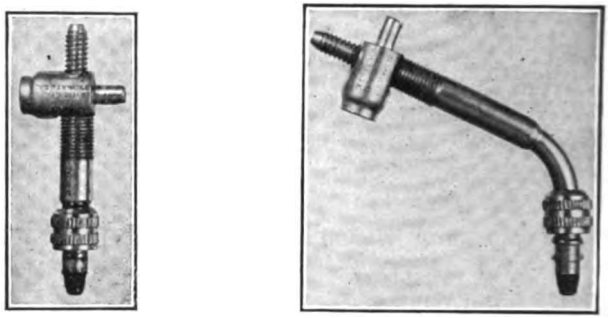

SCHRADER VALVE PLUGS FOR WOODS VALVE STEMS

the Schrader universal valve plugs is that tubes or tires fitted with them can be accurately inflated to the pressure prescribed by the tire manufacturer, as they permit the use of a tire pressure gauge for as-

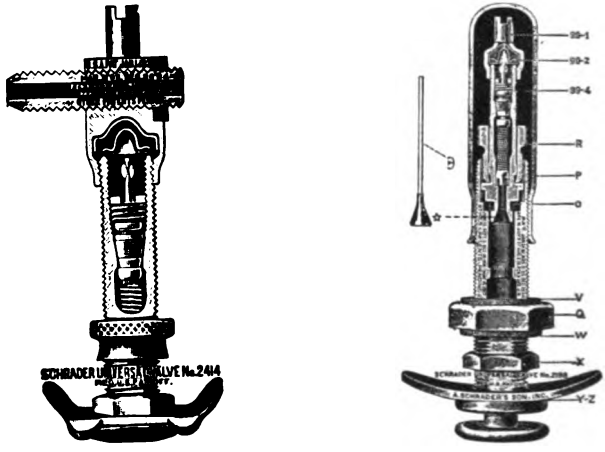

SCHRADER EUROPEAN TYPE BICYCLE AND MOTORCYCLE VALVES

certaining the air pressure in a tire, which is absolutely impossible when the Woods type of valve is used.

A Schrader universal bicycle and motorcycle valve, having outside fittings similar to the Woods valve, the Schrader universal valve inside,

and the combination valve cap and pump connection is now furnished for the European trade. This valve possesses the additional advantage of having a body thread of the same size as the pump thread on European motor tire valves, so that, should occasion require, a European motor tire pump could be used for inflating a tire.

A motor tire valve is also furnished for use abroad, fitted with a Schrader universal valve inside. All threads and fittings on this valve are the same as those on European motor tire valves. Although fitted with the Schrader universal valve inside, the valve is so constructed that should replacement be necessary and there be no new

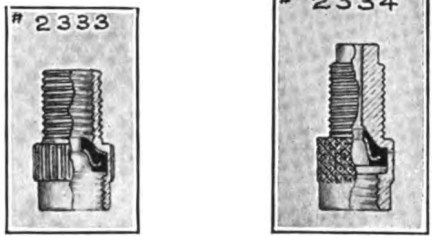

SCHRADER PUMP ADAPTERS FOR EUROPEAN VALVES

Schrader valve inside available, an ordinary European valve plunger can be used, by inserting it in the housing or top, after having removed the valve inside.

Adapters are to be had which, when screwed on a European motor tire valve, enable one to inflate a tire, so fitted, by means of an American pump, or vice versa.

In a well-known tire valve now extensively used the tubular body is provided at its outer end with a detachable valve piece to which the pump can be connected. This piece has arranged at its inner end a loose rubber washer which can bear on a shoulder in the body, and also a conical plug which enters and seats upon the inner end of the valve piece. The valve piece is prevented from rotation by lateral projections entering slots in the body, and is secured to the body by a screwed bush. With this valve inconvenience is often experienced when the removable parts are detached, as either or both the loose washers and the plug are liable to be lost.

The object of the Wright valve is to avoid in an improved manner the objection to the ordinary construction, and for this purpose the invention comprises the arranging of the valve seating and the valve

plug within a cavity in one end of the valve piece, and fitting the cavity at its inner end with a nipple which is grooved for the permanent connection with the washer.

Springless Tire Valves

Of the numerous springless valves, all devised primarily to make tire inflation quicker and easier, perhaps the best known is the Double Seal valve. It is just what its name indicates—a valve with two checks against the confined air. It has no springs nor does it rely on pressure of internal air to prevent leaking. The valve cap, shown on the right, is provided with a rubber washer. The valve inside shown underneath on a larger scale has a rubber washer just below the head, where it is seated on the end of the valve stem. Besides this there is a small sleeve packing of rubber near the lower end of the valve that

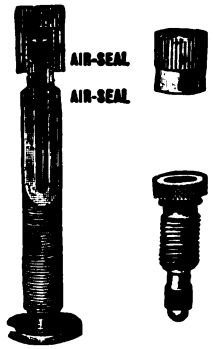

Double Seal Valve

snugly fits the bore of the valve stem. The parts are shown assembled in the figure at the left. The valve is interchangeable with all standard stems and can be removed and seated without tools.

The Ives valve has but one internal part which forms a perfect check, easily operated from the open end by means of a screw driver on top. The rubber bulb check is not destroyed in any way, and the cap with swivel packing makes it absolutely air tight. Simplicity, easy action and long service are its merits.

The Burke valve differs from ordinary valves in several ways. The valve stem is made in two parts, so that if it becomes bruised on the end, the end stud can be changed for a new one instead of changing the whole valve. It has a lead gasket to insure a tight joint. The plunger has no spring, being a balanced valve; the pressure in the tube

equaling that of a pump, so the valve closes automatically. This valve has three parts for the air to pass through, so that a tire can be pumped very quickly and easily—a great advantage when tires are inflated by hand. Another advantage is the reversible rubber valve seat which rests in a metal recess in the valve stem.

A suggestion, which abandons the valve idea in favor of the stop-cock principle, is the Duryea. The check, in this case, or what corresponds to the check in other valves, is an aluminum cone fastened loosely over the opening of the air-passage in the seat. When inflating, the

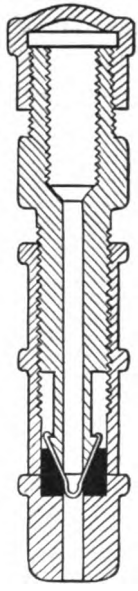

DURYEA TIRE VALVE

seat is screwed up, leaving a free passage for the air. When through pumping, the seat is screwed down, forcing the cone against a vulcanite counterseat, thus closing the passage as shown.

Some of the French detachable rims need a special valve, the only requirement being that it shall not extend through the rim. Otherwise they embody the regular valve features.

The Day valve consists of three parts, only one of them being a working part, and contains no springs nor delicate mechanism. It is heavily made of brass and simply screws on the top of a standard valve stem after the old valve inside has been removed. No waste of air pressure is required to open it, because it opens by the influence

of gravity and is held closed only by the pressure in the tire. The valve plunger, of rubber and conical in shape, drops down the valve shell slightly away from its seat when the tire is deflated or when air is being introduced. When pump inflation ceases the valve plunger is forced upward against its seat, the valve being held in this closed position merely by the pressure of the air in the tube. Easier and quicker inflation than with spring valves is the claim.

An interesting early type of springless valve, represented by the Bowe Tire Valve Co., has for its check a small rubber ball instead of a metal plunger. This simplifies the construction of the valve, and leaves practically nothing to get out of order. As a matter of fact, however, reliance is placed almost wholly upon the cap, in the specification. When the cap is screwed down tight, a slight leakage around the ball soon equalizes the pressure, so that the ball drops back from

BOWE VALVE

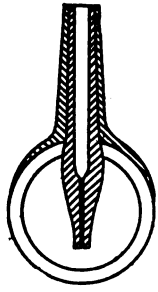

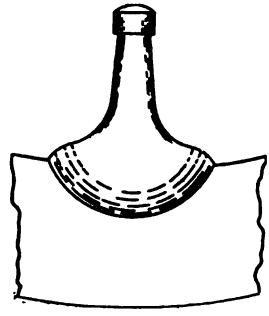

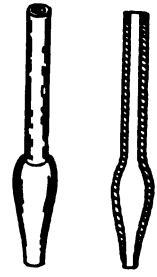

WOOD RUBBER VALVE

the opening, throwing the full pressure upon the dust cap. As a rule it is not considered well to have the check depend wholly upon the back pressure, and so long ago as 1892 the Silvertown pneumatic tire valve was held in particular esteem because it did not depend on back pressure for its closure.

Then there is the Smith easy pumping valve as well as the Stevens for which ease in working is claimed.

Wood's valve is composed entirely of rubber, which its inventor claims cannot be injured by the creeping of the tire. It has a tube which projects well into the tire, the lower end of which is of such soft collapsible rubber that when the tire is inflated, the pressure causes the sides to contract, entirely closing the air passage. An outer casing holds the tube in place, and a rubber cap serves as an additional air seal and prevents the entrance of dust.

Pressure Indicating Tire Valves

Some very ingenious valves have been invented, which automatically register or announce over-pressure in the tire. One of the earliest of these, made by A. Ferdinand, of France, has a secondary set of springs, by which, when the pressure becomes too great for safety, the entire valve seat is forced upward. In the hub of the wheel are a small battery and a bell, with wires connecting with the valve seat and the dust cap. When the excessive pressure drives the seat outward, the circuit is closed, and the bell rings until the pressure is relieved.

Most of the more recent devices of this sort combine the ordinary functions of a valve with a pressure gauge to show the degree of inflation of the tire.

The Hathaway combination tire valve stem and pressure gauge has eccentric and parallel air and gage tube bores, the lower end of the latter bore having a primary and an eccentric secondary counter-bore and the upper end of the latter bore terminating short of the tip of the barrel. A mercury tube fits in the gage tube bore, its outer end closed and seated against the upper end of the bore, and its lower end open and entering the primary counter-bore. There is a packing ring in the counter-bore around the end of the tube, a diaphragm having its edges thickened and seated against the shoulder formed by the secondary counter-bore so as to space the diaphragm from the said shoulder, and binding ring, screw-threaded into the secondary counter-bore and bearing against the thickened edge of the diaphragm to retain the diaphragm in position, a portion of the valve being cut away to expose the tube and bearing graduations.

The Noe valve and gage replaces the usual tire stem and valve, and is about the same size, so that it can be applied to a tube and inserted through the standard wheel felloe hole, without any alteration being necessary.

The action of the gage is to prevent the tire being inflated above the pressure at which it should be run. It also gives an indication of the tire pressure at all times, being graduated with a 30-pound range. In use, the gage is covered with a dust cap, and looks like the ordinary valve stem.

The Giles indicator valve shows through a slot in its stem figures indicating the air pressure in the tire.

The valve itself is of the conventional type. The stem, however, is smaller in diameter than usual. A flat, thin-walled tube is coiled about it, the lower end of which is anchored while the upper end is left free with a dial attached.

The upper end of the tube is closed and the lower end communicates with the interior of the valve, thus being under the same pressure as the tire itself. The operation of the gage is the same as that of a steam gage, the pressure tends to uncoil the tube, and the dial is turned according to the pressure. The reading slot is placed at the top in the outer stem.

The Harris indicator valve stem affords the motorist a very needful indication of tire pressures without unscrewing the valve cap and applying a gage. The stem can be put in any tire in five minutes. Once in place, it remains permanently during the life of the tube, being protected by the dust cap, but exposed for reading as soon as the cap is removed.

The pressure indication is afforded by means of a pointer on a rotating dial.

The Pulverman tirometer valve, has a transparent dust cap, within which is positioned the pressure gage so that it can be easily read

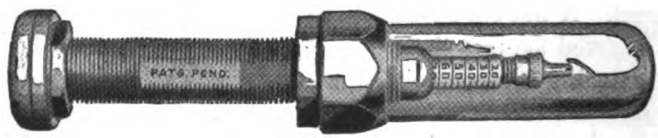

PULVERMAN TIROMETER VALVE

without removing the cap. This valve can be substituted for the ordinary valve on any tire, as it fits any pneumatic tube.

OVER-INFLATION RELEASE VALVES

The Arnold tire safety valve, instead of registering the pressure or sounding an alarm, relieves the pressure automatically. This valve has two checks, working in opposite directions. By adjusting a spring the valve can be regulated to any pressure. When this pressure is raised by high speeding, or heating the tire from any cause, the safety check is opened and lets out some of the air.

The Salus is another valve that releases the air if the pressure becomes too great. Still another is the Meyer. This is fitted with a gage and when the valve is attached, it can be set to blow off at any desired degree of pressure. Whatever the number of pounds per square inch the valve is set to hold can be supplied and any pressure above that will release the air. Any excess pressure in the tire caused by expansion from heat or friction in hot weather is automatically released, thereby lessening the danger of blow-outs.

The Kahn valve combines in one device a valve, pressure gage and over-inflation release valve. Over-inflation is impossible, for the valve can be instantly set to the proper pressure, 50, 60, 70, 80 or 90 pounds, as the case may be, and when that point is reached the unnecessary air is diverted through an outside port, producing a whistling noise that serves as a warning. To verify the air pressure in a tire, the top of the valve is pressed down. If the valve does not whistle, it indicates that the pressure is too low. With the adjusting collar set back in the next lower indicated pressure and the operation repeated, if the valve whistles it indicates that the pressure is between the two markings. If it does not whistle, the collar is set back another ten pounds and the operation repeated until the pressure is indicated.

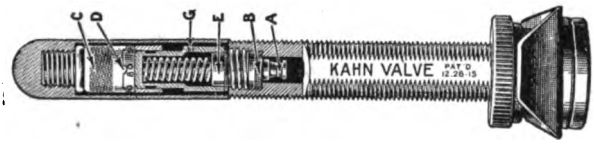

KAHN VALVE

The Lock Switch tire pressure gage is useful only while inflating. It is really no permanent part of the valve, but is rather a nipple interposed between the valve stem and the pump tube. This nipple is provided with an escape valve and spring, by adjusting which with a screw the air pressure within the tire can be set at any point marked on the scale. Beyond this point no further air can be forced through the valve.

DEFLATION SIGNALS

Running tires on too low air pressure shortens their life more than any other cause, owing to the results of rim cutting and carcass deterioration due to excessive flexing of the side walls. Of the several devices attached to tire valves to warn the motorist when his tires are becoming soft, one of the earliest was the Polo pneumatic tire alarm. It is easily and quickly attached to the valve stem and takes the place of the cap. When the pressure falls below a given point the alarm gives vent to a shrill whistle. A similar British device is known as the Cowley tire alarm.

The Columbus flat tire alarm, a unique device for warning the automobile driver when his tires are becoming flattened, is shown in cross-section. A winged nut which forms the end of the valve stem is embedded in a ball of rubber. Whenever the air inside the inner

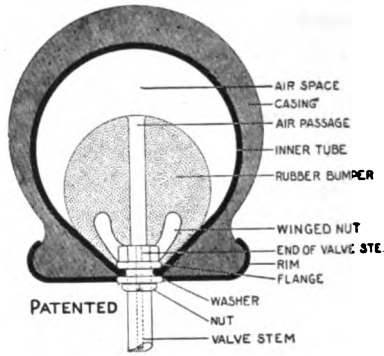

COLUMBUS FLAT TIRE ALARM

tube becomes reduced as much as fifty per cent, this ball causes a slight bump as the tire revolves.

There are also mechanical alarms, such as Cri-Cri, which are not associated with the tire valve.

CONCERNING TIRE VALVE LEAKS

Almost everyone knows that the plungers of tire valves do not always hold the air pressure absolutely, but it is not generally realized that this may be due to the fact that the plunger itself is only held in position by internal air pressure, and owing to irregularities in the road, is therefore liable to jump from its seat, and in doing so release a certain amount of air. Again, if the valve happens not to be set perfectly true in its conical bed, there is always a chance of air creeping past. This escape of air can be arrested by having a good leather washer inside the valve cap. A rubber washer is not advisable, because it is liable to be cut away and cause leakage. Small particles of rubber from this washer sometimes become detached and pass down the valve opening, and when next the pump is used, these particles are pushed down into the valve and foul the plunger, which necessitates the deflation of the tire and the removal of the valve inside.

Sometimes the pin stem of the valve plunger becomes bent and permits the air to whistle out almost as fast as the pump can inject it. This pnenomenon is difficult to explain, but beyond question a pin that has not been seen or handled for 2,000 miles will suddenly bend. When bent, the pin may jam so that its mushroom head fails to seal the valve; or it may jam at a gentler angle, and simply prevent the rubber head from bedding evenly into its seat; in either case the valve will leak and pumping becomes valueless. It is not easy to true a pin plunger, and

since the pin's cost is infinitesimal, a new valve inside should be immediately fitted. If the pin be straight and true and still the valve leaks, the probability is that the over-zealous screwing down of the small inner valve cap has ground a minute fragment of rubber off the washer, which reposes deep in the barrel of the cap. This fragment may have dropped into the valve and be jamming the pin, which has the same effect as a bent pin. The fragment should not be fished out with a pin, or the valve may be further damaged. It is best to remove the valve and screw its body (minus cap and plunger) on to the

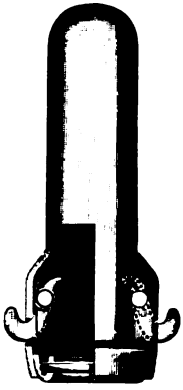

UNIVERSAL QUICK ACTING DUST CAP

KWIK-ON-AN-OFF CAP

UNIVERSAL ADJUSTABLE DUST CAP

inflator. Two or three short, sudden strokes of the pump and the obstruction will fly out, after which the valve can be re-assembled and should prove airtight.

VALVE ACCESSORIES

The only sure way of knowing whether a tire has the prescribed air pressure is to test it, a process which involves considerable trouble in removing and replacing the screw-threaded dust cap. Schrader's quick-acting cap helps in this. It fastens by a quarter turn and is then firmly seated. To remove it, all that has to be done is to give it a quarter turn in the opposite direction.

A Schrader dust cap for tire valves, known as the "Kwik-on-an-Off," slips over the valve stem and locks with one turn. It remains securely fastened until it is necessary to remove it, when a slight turn in the reverse direction disengages it and permits easy removal. The mechanism is patented and consists of a one-piece shell enclosing a friction spring which fits into the tapered portion of the cap and contracts to grip the threads of the valve stem.

Harmonizing with the metal spokes of wire wheels, there has been designed a Schrader tire valve of nickeled brass, which is longer than the one ordinarily used on tires and which has a Universal adjustable dust cap that covers the entire length of the valve stem.

The Snap-Lox dust cap shown here gets its name from the ease with which it snaps on. It consists of two parts—the bushing

SNAP-LOX DUST CAP

SCHRADER DEFLATING CAPS AND VALVE REPAIR TOOL

and the cap. The cap proper has four slots at its base which allows it to be snapped over the upper end of the bushing.

Another interesting Schrader invention is the Schrader Universal Five-in-One repair tool. This is a tap, die, milling cutter and wrench ingeniously combined in a convenient pocket tool. It performs three repair and two utility operations namely: (1) repairs the inside thread on valve and (2) the outside thread on valve stem for valve cap; (3) smooths down valve cap washer seat on valve; (4) removes or inserts valve inside; (5) deflates tube by holding down valve inside, by screwing deflator into mouth of valve.

Another similar device is known as the Three-in One tire valve tool. The three parts from which this device gets its name are a slotted end to remove the valve inside, a die to run worn or burred threads on the outside of the valve stem, and a tap to clean out the threads on the inside.

Still another Schrader valve specialty is the deflating cap, which eliminates the loss of time occasioned by trying to hold down the air

valve while deflating the tire. The little cap slips easily over the valve stem and holds it down while the air escapes.

Valve insides are delicate mechanisms, and formerly reached the consumer with little or no protection against rough handling or dampness. Schrader valve insides are now packed in a small tin box just large enough to carry five. This container, which is both damp-proof and dust-proof, is grooved so that each inside is kept separate from the others. Thus, when some of the insides have been removed from the box the others are kept from knocking or rubbing against the rest, insuring absolutely perfect condition.

The Kraft valve inside is designed to provide a top guide for the well-known Schrader valve to insure that the latter shall be properly seated. A plug member is provided which screws into the open-ended socket of the valve shell and holds the valve seat in position. The plug member is utilized as a guide for the valve, through the medium

BOX OF SCHRADER VALVE INSIDES

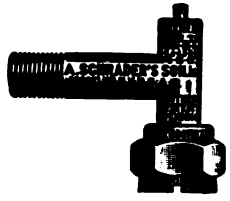

SCHRADER PUMP CONNECTION

of the so-called deflating pin which extends through it. In the usual construction the hole or bore through the plug must be sufficiently large to admit proper quantities of air through the valve in inflating the tire. Hence the deflating pin cannot fit so closely as to make a very accurate guide for the valve. In the present invention the plug is formed with a bridge which is provided with a hole of smaller diameter than the main portion of the hole through the plug so that the pin may make a close guiding fit with the bridge, while suitable passages for the air are provided in the sides of the bridge which connect with the main hole through the plug, thus retaining the maximum passage through the latter.

Schrader's pump connection permits testing the inflation of a tire with a pressure gauge without disconnecting the pump. A protruding pin at the top of the connection, when depressed by firmly holding against it the foot of the tire pressure gage, deflates the

plunger in the valve and allows the air to enter the gage. If the tire contains too much air, simply depress the pin until the excess air has escaped.

To summarize, the valve, that is the ideal valve, is a very simple proposition. A perfect check, a perfect cap, and easy accessibility is all that is needed. All of these qualifications seem to be possessed by existing valves.

CHAPTER XXXVII

TIRE TOOLS AND ACCESSORIES

WHILE motor cars were still young, some of the automobile papers railed against carrying spare tires in conspicuous places about the machine, on the ground that they tended to convey to the general public an impression of unreliability. Average tire mileage has trebled since those days, yet two or three tires hung on the side and rear of the car still form part of the mental picture whenever an automobile is mentioned. Spare tires will be needed as long as pneumatic tires are used and likewise tire holders on which to carry them.

Tire Holders

Tire carriers or holders for spare tires are made chiefly for one or two tires, sometimes three, some for the rear end of the car, some for the running board. The former are usually bolted to the chassis frame or under the body and combine a license plate bracket and tail light. A few have tire brackets attached to the frame, strengthening the rear gasoline tank. The tire may be held in place by leather straps, a metal clamping piece and bolt, or a patent locking device. On small cars carrying only one spare tire the carrier often consists of a light ring supported on brackets, the spare tire and demountable rim being hung over this carrier ring and held in place by a bolt and nut. Larger cars usually have tire brackets with spaces for two mounted tires, which stand on or hang from the brackets as the case may be and are strapped or bolted in place. A chain with padlock around the tires and carrier bracket prevents theft.

The Safety tire lock, for example, consists of a steel chain and a cushion of rubber tubing that extends around the inside of the chain, preventing tire wear and rattling. Besides the bracelet form shown in the cut, for attaching the tire to the rear of the car, other styles for single tires and pairs are made with brackets of different forms to be attached to the running board, etc. Extra links can be added to make the chain as long as desired, and a different style of key is made for each lock.

The Rimlox carrier combines tire holder and lock. It supports the rim, or rims, from the inside as supported when in service on the wheel. It consists essentially of a three-armed spider, the third, and

vertical, arm being extensible, so that the device may be expanded to engage the rim. When in use, the device is secured by a padlock. To disengage the rim, it is necessary to remove the lock, when the locking arm is released, leaving the rim free to be lifted off of the two upper supporting arms. It is claimed for the device that it is absolutely burglar-proof, that it is not subject to vibration or rattle, that it save tires from damage by friction, and that tires may be removed from it in five seconds.

Running board tire holders are usually merely supports or brackets bolted to the running board or side of the body or both, the tires

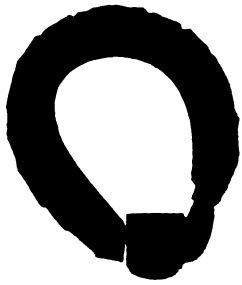

SAFETY TIRE LOCK

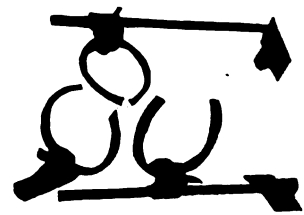

LACRE CLAW TIRE BRACKET

being set into them and strapped in place. Several devices, such as the Gilbert and Allen tire locks, are running board tire holders with hinged metal straps and Yale or similar locks.

TIRE COVERS

Light and heat being among the worst natural enemies of rubber it is obvious that spare tires should be protected from the sun if they are to render maximum service. Therefore tire covers have become an important automobile accessory which protects the tire, keep it clean as regards dust, mud, oil and water, and improve the general neat appearance of the car.

They are made of waterproof enamel duck or carriage cloth in all sizes and styles for demountable rim and wire wheel equipment, and in black, white and colors to match the car. In shape they fit the tire perfectly and have a valve hole reinforced with a brass grommet to prevent wear and tear. One style has overlapping ends six or eight inches in length and several snap fastenings allowing considerable adjustment. Another style is a continuous casing that slips

over the tire. One side and then the other slips over the tire and is held by spiral springs or elastic cord along the edges.

For use with special demountable rim equipment where tires are carried at the rear of the car with holders attached on the inside of the rim, a different type of cover is necessary. This has a heavy elastic cord rim through the inner edges, the ends overlap and fasten with snap buttons, thereby providing adjustability. For protecting the tire and rim of a spare wheel the cover is held in place by straps buttoned across the rim between the spokes. Another style covers the entire wheel and is especially suitable for use on wheels carried at the rear of the car.

Covers in most of the styles named may be had for two as well as single tires.

The Closz carrier is an annular trough-shaped receptacle made of any material that will hold water. It serves the twofold purpose of

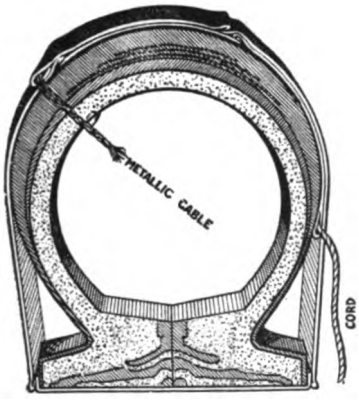

HOPEWELL TIRE CASE

TEEL TIRE CASE

a device for testing inner tubes in water to detect leaks and a tire-case adapted to be carried on the tire holder of an automobile.

TIRE TRUNKS

Some automobile body builders have provided closets under the body, opening from the rear, in which spare tires and tubes might be carried; but there is so little room about a car, and so many things to be carried, that tourists used the closet for other things and hung their tires outside. Even when the tire cases were hung outside, they begrudged the empty circular space within the case and several firms

manufacture tire trunks so that this circular space can be utilized. Of the earlier examples, the Continental case provided for carrying several inner tubes within it; and others, as the Russell and the Brooks cases

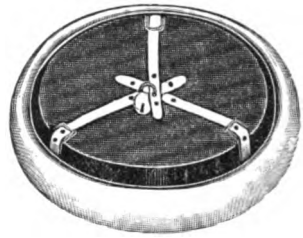

THE VUITTON TIRE CASE

and Vuitton's *sac chauffeur,* contained within them a regular band-box or metal drum, in which not only tubes and repair kit, but even articles of clothing might be carried. Most tire trunks of the present day are intended solely for clothing or hats and are convenient addi-

CONTINENTAL TIRE CASE

tions to the regular luggage when touring. Luncheon trunks are also made in circular shape to go within the spare tires.

TIRE TOOLS

Tire tools were not made necessary until the coming of the motor tire, especially the clincher. Bicycle tires needed no tools for detaching or applying, nor for mending. For crescent rims a glue wheel was

sometimes used for applying the cement, and vulcanizers very early came into use. The quick-repair and single tube tires required a cement squirt or repair tool, and slender jawed pincers were used for inserting single tube plugs. Pumps were the simplest things imaginable.

The motor car with its large clincher and later straight-side tires changed all this. The clincher is a good tire so long as it is on the rim. It is when one comes to take it off or put it on the rim that its

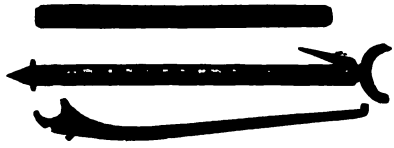

DIAMOND TIRE TOOLS

special weaknesses crop out. The array of tools necessary for the accomplishment of this purpose makes the best argument that the clincher's rivals could bring against it. A jack is needed to lift the wheel, while various pinchbars are used to prize up the bead. Many slightly varying tire irons or levers of malleable iron have been devised with curved ends properly shaped for lifting the casing over the rim after the beads have been loosened from the clinch. They have no

REMOVING LEVER

WHEEL BRACE

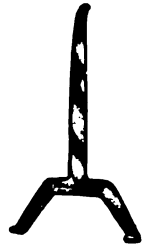

APPLYING LEVER

points or sharp edges to cut the tire or pinch the tube. One especially useful tool for demountable rims, the Williams rim tool, combines a hammer, socket wrench, screwdriver, and tire iron.

A special tool is desirable to disengage the bead from the clincher seat, where it often gets stuck. Special wrenches were formerly necessary to unscrew the lugs, and thumbscrew clamps were put around the tire to hold back the bead when it was disengaged. A special lever,

which fits the bead, lifts it up until the flat pinchbars can take hold. There are special applying tools, generally made with two prongs. The different makers utilize numerous variations in their general shape. These small levers are often inadequate, however, when it comes to shoving the last 12 or 18 inches of bead over the rim.

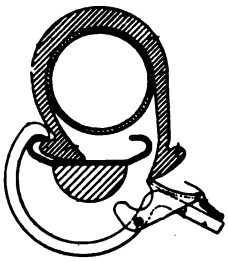

MICHELIN TIRE TOOL

MORRILL TIRE JACK

For this purpose a system of small jacks is made for lifting this last section of the bead. These jacks run from the hub to the rim, and several are needed to do the job properly, locking each while the other

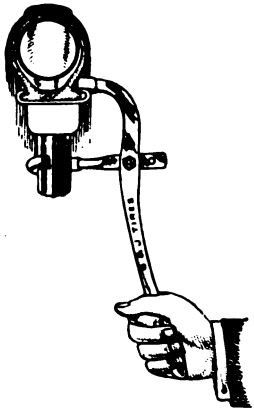

G. & J. TIRE TOOL

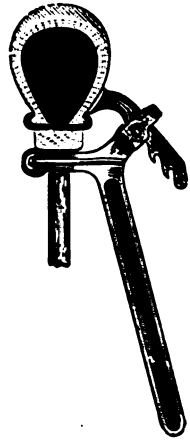

SPRINGFIELD DETACHABLE TIRE TOOL

is being worked. Add to this the special but simple tools for quick detachable rims and the tools for demountables, rim gages, pressure gages, pumps, jacks and repair kit, and the motorists' tools are many.

One useful and popular type of tire tool is intended for loosening clincher tires without injury after they have rusted to the rim. The

Springfield tire detacher is designed for use in connection with the pry blades furnished by the tire makers. The parts that come in contact with the tire conform to its shape and do not injure it.

The L. & M. and Bryant tools have the advantage of loosening the tire all the way around and are designed to be used over the top of the tire as well as under the rim between the spokes of the wheel. Each tool is a large clamp, having a screw-adjustable jaw at one end and a lever-actuated slide shaft on the other.

The jaws themselves are tipped with combination tire and rim engaging wedges. The slide shaft passes through a guide hole and forces the wedge downward into the bead and straight across the plane of the rim, with no tendency to ride up on the tire or grip the thin wall of the casing. The principle of leverage involved locks the slide shaft automatically on its full throw, thus holding the inner ring on Q. D. rims for free removal of the lock ring, and also for forcing the rings over the rims when the tire is replaced.

The Holden tool is designed especially for the demountable rims that are not Q. D. It will loosen the bead under the most stubbornly rusted condition without injury to the tire, as the part that forces it in has a wide dull edge. By turning the handle outward a little past "dead center" it locks, holding the bead inward and greatly facilitating the removal when the rim is split crosswise.

One of the early tire tools known as the Ever Ready rolls around the circumference of the tire through the turning of a crank, thus loosening the tire.

The Marquette tire tool, shown here, is a handy manipulator with a grip "like a giant's hand." The clever construction of this simple

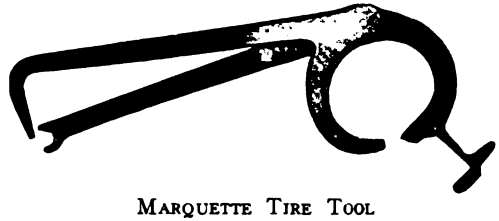

MARQUETTE TIRE TOOL

tool utilizes leverage so that it takes tires off and rolls them on rapidly without injury.

Another type of clincher tire tool, of which the Jiffy, J. P., One-Piece and Stewart Off-An-On tools are instances, not only loosens the tire but removes it from the rim. Most of these tools are in two parts

in order to get the adjustment, which is retained by a screw or by one part fitting into a socket of the other. The end of the iron which goes under the shoe is made to fit the rim on the under side and is the same shape as the shoe on the sides, to prevent pinching the tube. The tool is simply inserted under the bead of the tire, the ring is slipped over the hub of the wheel and the post allowed to rest on the ground. By revolving the wheel the tool will remove the bead, slipping it over the rim. The tire is replaced by attaching the tool so that the bead is on the inside of the tongue and the wheel is again revolved.

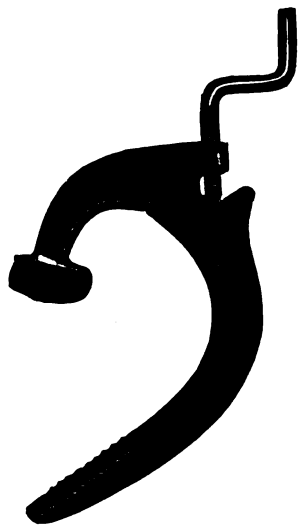

L. & M. Tire Adjuster

Rhodes Tire Remover

Several little devices were brought out to facilitate the removal and application of clincher tires with the ordinary tire tools, each being intended to hold the bead in the desired position at one point while the regular prizing levers were used elsewhere. The Becco tire grip is a narrow, flat plate having a curved nose that grips the rim and has a handle swiveled to it. When the curved nose has been slipped in between the tire and rim, the handle is turned down so that it touches the felloe of the wheel, or a spoke, thus bracing the plate at a slight angle and making it hold the tire securely in place.

The Brickey tire tool consists of a bar and chain with ring and hook at opposite ends.

To release a tire after the bead has been loosened the bent end of the bar is placed under the bead and the tire drawn over the rim by

pressing the bar down. By hooking the chain to a spoke and placing a link of the chain in the slotted end of the bar the tire is prevented from jumping back under the rim, while it is being released.

In replacing a tire, after the back side of the tire is on, the bar is placed under the bead, the chain is hooked to a spoke, passed behind the tire and placed in the slotted end of the bar. In this way the bead is pulled over the rim and held so until the rest of the bead is worked over with the ordinary tire tools.

In the early days when lugs through rim and felloe were deemed necessary to hold tires to the rim, such tools as the H. & H. and the Michelin tire fork were necessary to remove or replace lugs, or for putting in the valve stem while replacing the inner tube. The hooks were placed under the bead of the shoe and the lever on the tread, and the tire pushed back out of the way. A slight bend near the end of the handle furnished an excellent tire iron.

Rim Contractors

Split demountable rims require something more than ordinary tools with which to remove them easily from the tire. The utility

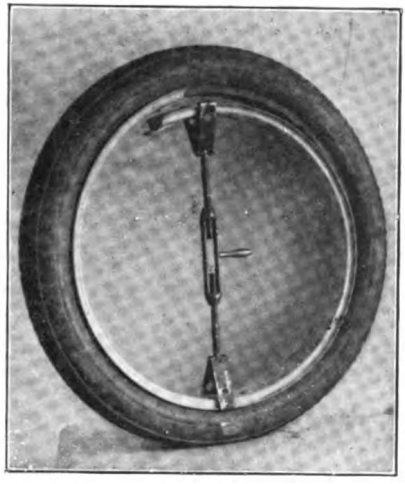

Burrill Rim Tool

of such a device consists, first of all, in compactness and simplicity of construction, then facility in applying it to the rim and an easy method of exerting in an even manner the force necessary to remove the rim.

The market affords many different rim contractors, most of which may be divided into three classes. The Burrill rim tool, here shown,

exemplifies the type of contractor which spans the rim from side to side and contracts it by means of a turnbuckle. Two grips are hinged to the right and left-hand screw bolts. The grips are slipped over the rim and with a few turns of the turnbuckle handle the rim is sprung away from the tire without distortion and easily removed. In apply-

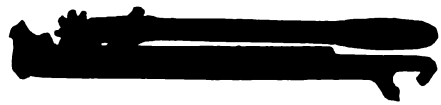

TREX TIRE TOOL

ing the rim to a tire, the tool is attached in the manner previously described and the rim bent slightly downward, when it can be sprung in place.

Other tools of this general type are the Stanweld, O. B., Rynehart A-1, Quick-Ezy, and Best. A modification of the same principle is seen in the Trex tool, a self-adjustable contractor that works with a rack and pinion movement. By working the handle back and forth

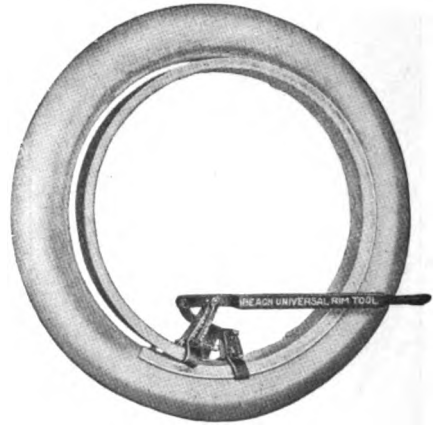

GREB RIM TOOL

until the rim is collapsed the desired distance the tire will come off easily. The new tire is adjusted with equal ease.

Similar to this is the second type of rim contractor which works by leverage rather than the turnbuckle. The L. & L. Handy and Perfection tools, for example, have two arms linked to a handle acting as a lever, either expanding or contracting their combined lengths, which can be adjusted by means of notches. To remove the rim, the

claws at the ends of the arms are placed over the rim flanges, one under the lock side of the rim near the split, and the lever is moved so as to break the split and contract the rim. To replace the rim, the operation is reversed. The Lawco and Positive tools operate in a similar manner but have three instead of two grips.

The third type of rim tool also works by leverage but grips the rim at opposite sides near the split. The Beach Universal tool, for example, opens the rim one-fourth inch, raises the lock end two inches and carries it over and by the other end four inches, thereby contracting the rim. It swings by the center and the spring of the rim holds and locks it in the contracted position, so that the tire may be removed. After the tire has been repaired and replaced the operation is simply reversed and the rim is forced back to its correct position.

Other similar rim contractors are the K. P. Universal, Friestedt, Weizer's E. Z. and Hick-Myer.

JACKS

A jack to raise automobile wheels off the ground for tire changing is an essential item of every tool kit. Hundreds of slightly varying

WEED CHAIN JACK

types are on the market. Most of the small jacks carried in the automobile tool box are operated by a short detachable hand lever which raises the head, a ratchet and pawl locking the jack by gravity. Another type consists of an endless screw operated by a worm wheel with ratchet lever. The Weed Chain jack is of this type but instead of a lever is operated by pulling an endless chain in either direction. Another type of jack, of which the Haslup is an example, is adjusted

to suit the size of the automobile wheel, when one downward movement of the lever raises the wheel off the ground and locks the jack so there is no possibility of its letting the car down until released by reverse motion of the lever.

For garage use, large long handled, jacks mounted on two small wheels are much used. They operate on a shifting fulcrum principle by simply "kicking up" the movable head according to the height of the automobile axle above the ground and then depressing the handle. The jack locks by gravity and the handle, about four feet in length, affords ample leverage. There are also pneumatic jacks, such as the

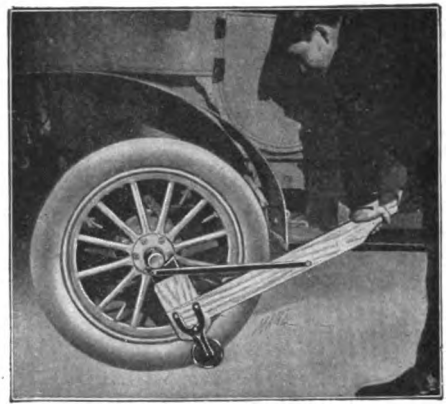

MURRAY AUTOMATIC JACK

National, operated by air pressure from a garage tank, compressor, engine or spark plug pump. The Hale relief jack is a hydraulic system to raise the entire car off the floor, and is especially designed to relieve the strain on the tires of fire apparatus which stand unused much of the time.

BLOW-OUT PATCHES

Emergency road repairs of a temporary character following a blow-out or the discovery of a fabric break inside the casing are usually made by inserting a blow-out patch or inner sleeve between the inner tube and the casing and applying a tire boot, sleeve or band to the outside of the casing before inflation of the tire. Such a repair will usually get the motorist home or to the nearest service station in case he has no usable spare tire in reserve. The mission of the blow-out patch or inner sleeve is to form an effective bridge for the inner tube across the fabric break in the casing; that of the tire boot or

outer sleeve to assist in taking the strain off the weakened carcass, hold the break closed and keep dirt out of it.

Blow-out patches are legion. Nearly every firm manufacturing tires, tubes and accessories makes them. While there are numerous blow-out patches of unique design the majority are substantially like

MAJOR PATCH

the Ideal, Essex and Major. They are made to conform with the inside of the shoe and completely take the strain from the latter. These sleeves are made of cotton duck, four to seven plies, according to size, securely vulcanized together, with beveled edges to insure a smooth surface for the tube, and have a flap on each side which passes over the rim to

IDEAL TWIN SLEEVE

hold the sleeve in place and prevent slipping. The plies of fabric are cut on the bias to prevent the flaps from tearing off and to form a strong protection to the inner tube.

The Ideal Twin Sleeve combines a blow-out patch and tire boot in one. It consists of an inner sleeve, which fits the inside of the

casing, and is set in place inside the shoe, pulling both flaps out under the beads of the casing. The outer part of the "twin" is carried up over the shoe, placing the flap underneath the bead and between the casing and the inner "twin," the lap of the inside "twin" being brought over the bead. The casing is then replaced on the wheel, just as though no repair had been made. The sleeves are made of high grade cotton duck, from 7 to 15 plies according to size, with beveled edges to insure a smooth surface for the tube. The flap passing over the rim on each side holds the sleeve in place.

The Dur-a-bul Wire-Knit blow-out patch is constructed with a layer of wire mesh inserted in the center, embedded in a layer of cushion stock that is vulcanized to fabric on each side. This permits flexibility without separation, while the wire insert resists pressure evenly and affords protection to any rupture in the tire casing. It

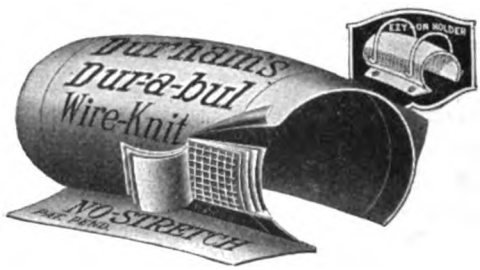

DUR-A-BUL WIRE-KNIT BLOW-OUT PATCH

extends to within three-quarters of an inch of each edge with at least five plies of fabric covering the wire completely. This patch contains from five to nine plies of fabric, the number being determined by the size.

With these patches is used the "Easy-On" holder, which hooks them around the casing and holds them securely to the side-wall while putting on. The holder is removed after inflation.

The Hampton blow-out patch exemplifies that type having a ply of leather between plies of fabric.

An inside locking blow-out patch that is adjustable to all variations in the sizes of casings is the K-C Vulc-Tite. The extension flap, with a wide strip of vulcanizing rubber, is shaped to fold under the opposite side of the patch, which is cement coated. The patch seats itself, and the pressure of the tube when inflated automatically vulcanizes the patch to itself. It is claimed that there is no possibility of

this patch bulging or spreading, as, fastened to itself in this manner, it forms a complete, perfectly shaped cylinder around the tube, and holds the pressure as certainly as a casing clinched at the beads.

Several of the earlier blow-out patches were held in place by hooks on both edges. The Traver patch was about 12 inches long, of heavy fabric, rubber coated, with a brass lip riveted to one edge to fit under

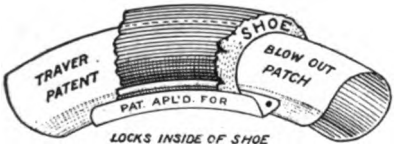

TRAVER BLOW-OUT PATCH

HAGSTROM BLOW-OUT PATCH

the rim and prevent creeping, while the Hagstrom was an inside sleeve held in place by a metal hook fitting the bead of a clincher tire.

The Chemico and Porcupine blow-out patches consist of several layers of vulcanized frictioned fabric and bristle on their outer surfaces with rows of metallic quills or teeth about an eighth of an inch in length which embed themselves in the inner side of the damaged casing, the points being driven in tighter with each revolution of the wheel, preventing slipping.

SLEEVES FOR INNER TUBES

Another type of blow-out patch intended to form an effective bridge for the inner tube across fabric breaks in the casing takes the

WOODWORTH INNER TIRE SLEEVE

form of a sleeve which is fastened about the inner tube instead of to the rim of the wheel.

The Woodworth inner tire sleeve is made of heavy chrome leather and buttons around the inner tube. There are strong metal buttons along one edge and a corresponding series of button holes along the other, with an inside flap to preserve a smooth surface for the tube.

Each sleeve has two rows of button holes so as to fit two different sizes of tires. The sleeves are made in two lengths, 10 and 15 inches.

The Keystone adjustable blow-out patch consists of rubber and fabric with a binding strip. The inner tube is inflated to its normal size so as nearly to fit the casing. The patch is then put in proper place on the tube and the binding strip wrapped around the patch, which with the tube is then put in the casing over the break and the tire put on the rim as usual. On inflation of the tube, the binding strip will unwrap until the patch comes into contact with the inside of the casing, when the pressure of one against the other will prevent further unwrapping. In this manner the inner tube is tied down, the pressure is taken off of the casing and placed on the patch so that the tire cannot swell and force the patch through the blow-out.

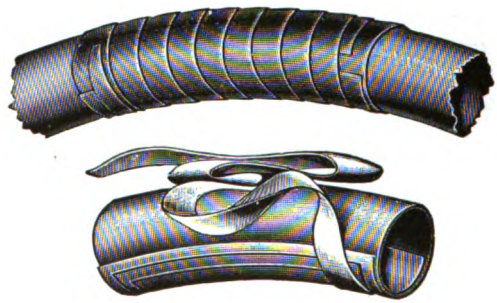

KEYSTONE ADJUSTABLE BLOW-OUT PATCH

The Kempshall burst tire protector, known as the "Fearnaught," a British inner tube sleeve, is formed of fabric treated with rubber and vulcanized, the sides being brought down to a feather edge to facilitate overlapping about the tube and to prevent chafing.

The K-C safety lock patch is made in one piece of rubberized fabric and has two overlapping flaps so that when they are folded over one another, a tube is formed. Loops are made in the flaps, and these dovetail, so that a wire key may be inserted in them, thus locking them together. In this manner, the patch is freed from all dependence on the injured tire for support. Due to the fact that it is made of rigid fabric, it does not expand under the air pressure, and does not press up against the hole in the casing. The interlocking loops extend only to within two inches of each end, allowing the patch to expand at the ends, this expansion serving to anchor the patch in position and prevent creeping.

The C. B. Q. patch is made of coated fabric ten inches long and has four metal fasteners attached by rivets on one edge. The patch is wrapped around the inner tube, the fasteners are put through slots, made behind a wire embedded in the opposite edge of the patch, and bent back, when the patch is ready to place in the tire where needed. The two inside plies of this patch project beyond the wire edge and form a flap that protects the inner tube from any damage.

The Atco is a patch of this latter type for Ford car tire sizes.

The Security blow-out holder consists of three layers of cotton duck, separated from each other by an anti-friction material. The layers are not fastened, except at the edges, where they are stitched and eyelets placed for lacing. This permits the different layers to work independent of each other and prevents the device being moved as a unit or being cracked like vulcanized holders, reduces friction and heat in use.

Tire Boots

Tire boots, also known as outside sleeves or bands, are of the hook-on, lace-on and buckle-on types. They are made both of leather, and of fabric and rubber, sometimes smooth tread and often metal

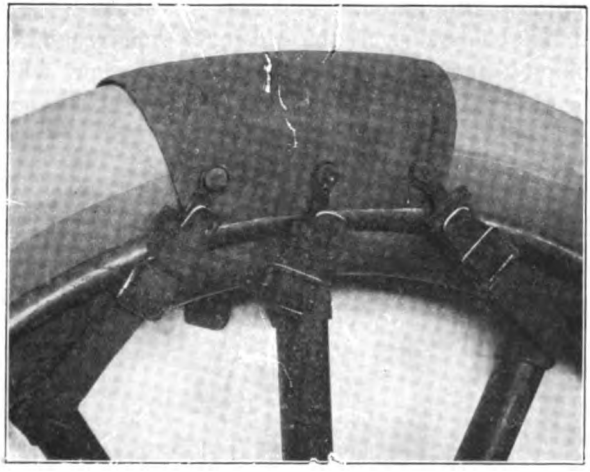

Goodyear Buckle-on Patch

studded. All are formed to insure a snug fit about the tire and prevent buckling which admits water and dirt to cause further trouble.

The tire boots of the various tire manufacturers usually consist of several plies of frictioned fabric cut on the bias with a heavy smooth

rubber tread to withstand severe road wear. The ends are tapered to minimize the bump of the revolving wheel, and the whole boot is pressure cured. The hook-on type has four or five steel hooks securely riveted along each side. The clincher type boot hooks under the clincher rim, the straight-side type under the bead of the casing. The lace-on type is secured with a rawhide lacing run through four or five grommets along each side, over the felloe of the wheel and tied.

MESINGER TIRE REPAIR BAND

The Goodyear buckle-on patch shown on the preceding page is typical of those patches like the above except that it is secured by three buckle-on straps which wrap around three spokes of the wheel and prevent creeping of the patch.

Several tire boots such as the Mesinger repair band, both in lace-on and hook-on types, are made of chrome leather, which is tough, soft, pliable and little affected by water. Often, however, the boot

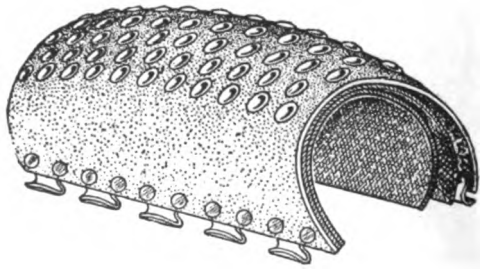

K. C. NO-STRETCH TIRE BOOT

combines fabric and leather, the latter being metal studded. The K. C. No-Stretch tire boot, for example, is built on a core the exact shape of a tire, in quarter-inch sizes, so as to fit non-skid tires, and in both hook-on and lace-on styles. It is constructed of two inner layers of rubberized tire fabric and an outside layer of leather. The no-stretch feature is the result of the use of the rubberized fabric, which resists

the action of water, while the studded leather cover supplies wearing quality. It is guaranteed by the manufacturers to give 2,000 miles service.

Tire Armor and Blow-Out Chains

More durable than the ordinary tire boot are tire armor and blow-out chains, which serve the same purpose but may be used again and again before they wear out.

Kimball steel tire armor is a band of flat steel links hooked together, put on over the tire and hooked to the rim, or held on the same as the tire. Each section is 2 inches wide at the tread plate, ⅛ inch thick, and each section weighs 7 ounces. Three or four bands will hold any blow-out. About fifty bands will cover a 32-inch tire forming a protector which will prevent blow-outs, punctures, rim-cuts and tread wear, without impairing the flexibility of the tire.

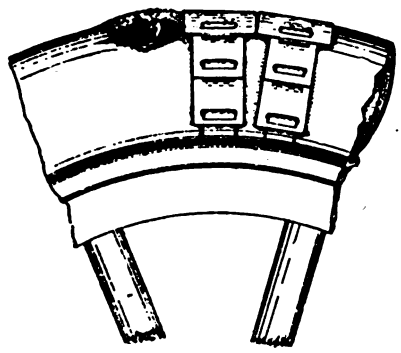

Kimball Steel Tire Armor

The Dobbins blow-out chain consists of four Weed cross chains attached to two side plates with rim hooks. The hooks are attached to the tire rim, passing between it and the bead of the tire. The slotted plates are then slipped over the upper ends of the hooks and the tire is inflated. The four chains, passing over the blow-out hold it firmly closed. With the device an inside patch is furnished, to be placed inside the casing, covering the rent. The patch is frictioned on one side so that it adheres to the casing when moistened with gasoline before application. The Dobbins blow-out chain is made in various sizes for both straight-side and clincher tires. Curved slots in the side plates in which the chains are inserted provide three variations in adjustment for proper tension.

Reliners

When a tire shows weakness or has blown out it is frequently discarded, although it may still be capable of considerable further use. Comparatively few tires wear through on the tread before they give out on account of fabric breaks. These breaks cause the inner tube to pinch or chafe and give way when least expected.

To prolong the service of old tires too badly damaged or worn to warrant retreading, a reliner, or interliner as it is sometimes called, may be inserted between the casing and inner tube. The mission of the reliner is to thicken and strengthen the tread, increasing its resistance to puncture, preventing the weakened carcass fabric from blowing out, and protecting the inner tube from being chafed or pinched by fabric breaks in the tire carcass. Such reinforcements costing only a few dollars according to size often add 25 to 50 per cent or more to the total mileage obtainable and sometimes double the life of the tire.

A reliner consists of three to five plies, according to size, of rubberized tire fabric, built up, formed and vulcanized on a core to fit the casing perfectly. It has feathered edges to prevent pinching the inner tube and is wide enough to reach from bead to bead, thus extending beyond the flexing point of the casing. It braces with an even strength, reinforcing the fabric at every point and practically doubling the strength of the casing. The inner side of the reliner is specially treated to prevent sticking to the inner tube, while the outer side is usually coated with a self-vulcanizing cement so that the reliner becomes part of the casing and cannot creep, buckle or chafe the tube. To apply, it is necessary only to wash the soapstone out of the casing with gasoline, remove the protective Holland cloth from the outer surface of the reliner, moisten the cement coating with gasoline and place the reliner in the tire. Reliners are made to proper width and usually cut to the right length for overlapping the ends slightly, although some are endless. For repair shop work reliner material is also supplied in various widths and plies in rolls of some 25 or 50 feet to be cut to any desired length.

A few reliners, such as the "Kant Slip," are not cemented to the casing, but have several flaps like those on certain blow-out patches which fold outside the tire beads and are gripped by the wheel rim, enabling the reliner to be more readily transferred from one casing to another.

A different type, the Bryant vacuum cup shock absorbing liner, enables the use of rim cut tires until the carcass is worn practically

threadbare. It is claimed to eliminate 85 per cent of the bearing surface and thus do away with friction, which is always so detrimental to the life of a casing. It is a sort of inner shoe entirely enveloping the tube. The feather edge coming between the two beads and channel of the rim laps over three rows of vacuum cups. Inflation of the tube automatically locks the liner, which is held in position by the action of the vacuum cups.

Tire Protectors

Tire protectors, or inner tires as they are sometimes called, are similar to most reliners except that they are of heavier construction, of endless annular form to fit the inside of the casing, and intended primarily to protect the inner tube from puncture and pinching throughout the period of service of the casing rather than merely to reinforce old worn tires. They take the pressure of the inner tube from the casing, add thickness to tread and sidewalls and offer greater resistance to tacks, nails, and other puncturing objects at only slight

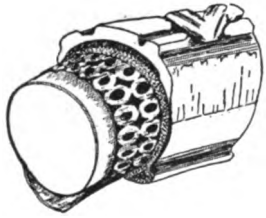

Bryant Liner

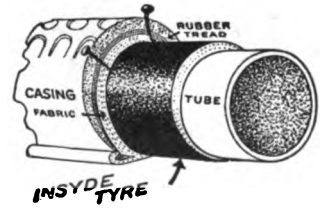

Insyde Tyre

if any reduction in resiliency. Heating with consequent fabric deterioration and separation of plies due to the additional thickness is overcome by vulcanizing or otherwise anchoring the protector to the carcass and preventing internal friction. Many prefer inserting tire protectors to retreading old tires.

One recent type of tire protector, of which the "Inside Tyre" is an example, almost encircles the inner tube, being thicker at the tread and tapering down to featheredges near the beads of the casing. It is made of several plies of fabric vulcanized over a tire mold so that it fits the inside of a tire casing exactly. The outside is coated with rubber which vulcanizes itself to the inside of the casing, thus preventing slipping, while the part that comes in contact with the tube is coated with rubber which has been treated so that the tube will not stick to it. This device can be used over again after the outside tire is worn out.

The "Innershu" tire, one of the early tire protectors, is made of specially thin 12-ply laminated fiber having great strength and pliability. This fiber is formed by machinery into full smooth tire shape with canvas overlaps designed to prevent or hold rim cuts. The protector wraps entirely around the inner tube, is self cementing and becomes part of the casing, the cement coating on its outer side first softening and then setting through the action of the heat generated by the use of the tire.

The Macintosh, a British tire protector, also takes the form of a supplementary canvas tube, with a circumferential split forming an open overlapping joint.

The Interlock inner tire is in reality a tire within a tire, the inner tire being as heavy as the outer, of 4 to 6-ply cotton fabric, laminated, thicker at the tread and tapering to the beads, where two

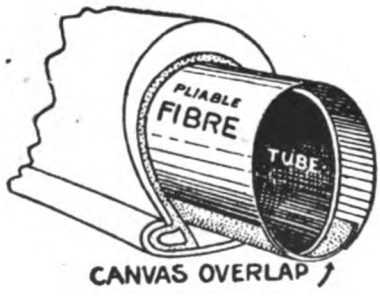

INNERSHU TIRE

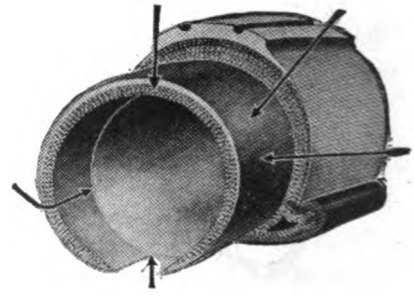

PLANET SUB-TIRE

wide self-sealing overlapping flaps serve to lock the device when the inner tube is inflated. It is said to turn nails, hold blow-outs and support old weak or overloaded tires until they are past all wear, when it can be removed for use in another tire.

A slightly different device called the "Planet Sub-Tire" is said to enhance resiliency, double tire life and prevent blow-outs. In the 3½-inch sizes it is made with three layers of new fourteen-ounce fabric, while the 4-inch and larger sizes have four layers. The outside is a coat of soft cushion rubber to prevent stone bruises, and is roughened to prevent friction. This, the manufacturer claims, stops slipping and tends to prevent the creation of heat inside the casing. No cement is required or used to keep this inner tube in place.

The "Jon-Con" Tire Protector may be easily applied or removed and is said not to heat in service. It is made in one continuous mold-

ed piece of firm and elastic rubber with a central reinforcing ply of frictioned duck to render it proof against blow-outs in case of minor casing cuts.

The protector is particularly effective against piercing by nails. These on passing through the tire tread meet the yielding protector

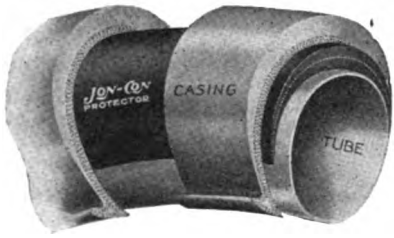

JON-CON TIRE PROTECTOR

and are bent harmlessly parallel to the road surface by the travel of the wheel.

The Coffield is a similar protector of firm elastic rubber without fabric which turns and clinches nails that may pierce the tread of the tire casing. It also distributes shocks from stone bruises around the

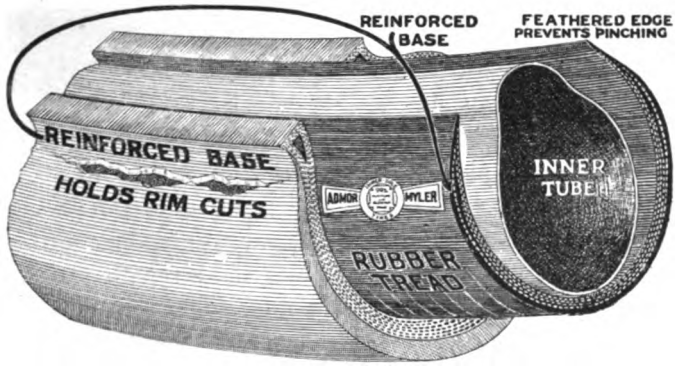

ADMOR-MYLER INNER TIRE

casing and in hot weather is said to keep the tire several degrees cooler than would otherwise be the case.

The Admor-Myler inner tire has a double rubber bead to strengthen the tire, take the strain off the rim edge, and, it is said, make rim blow-outs almost impossible. The edge is feathered to prevent pinching in the casing.

The Thermoid tire reinforcement is also of rubber covered on both sides with one ply of duck. It is endless in form and exactly fits the inside of a standard sized casing. It is claimed to increase the life of a new tire at least 40 per cent without impairing its resiliency.

Wais armor is a rubber cushion having a T-shaped head and intended to be inserted between the inner tube and casing. It is claimed that this makes the tire puncture proof and prevents blow-outs, at the same time affording greater resilience and requiring less than normal pressure in the inner tube. It is asserted that the T head prevents the tire from flattening under weight; that it will stay at the same radius, making the running and steering of the car easier, and that the air channels prevent the tube and casing from heating.

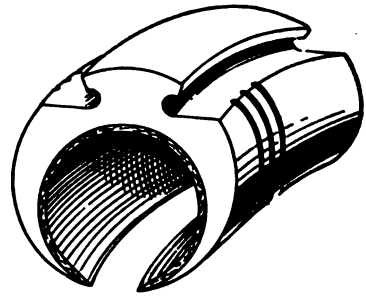

WAIS TIRE ARMOR

The Polson bead-lock inner tire requires no cementing in. It consists of five to six plies of tire fabric, according to size, rubber frictioned and vulcanized on regular tire forms to fit the tire perfectly. All the plies extend from bead to bead, reinforcing the casing at any point where it may be weak. It doubles the strength of old or new tires and prevents punctures and blow-outs. The protector is held in place by two flaps which are a continuation of one ply of fabric and lock under both sides of the bead all the way around the tire. This prevents any chance of the inner tire creeping, blowing out or pinching the tube, and also facilitates changing it from one tire to another.

Another type of tire protector depends upon wires or metal bands along both edges to form the anchor or security for the reinforcement. The Fisher rim-grip sub-casing is of the usual rubber impregnated fabric construction having several plies vulcanized together without any loose ends or overlapping splices. Two flexible flat steel bands are vulcanized into the sub-casing, one on each edge. Inflation of the

inner tube forces these bands against the tire beads, effectually preventing any slipping of the sub-casing. These bands might be compared to the hoops on a barrel and the manner in which they hold the staves in place.

The Maxotire completely encircles the inner tube and has a steel wire hoop to hold one edge of the reliner and a semi-cured tube protection flap that wraps around the tube under the wire hoop. This reliner automatically adjusts itself to a new or stretched tire.

Casette is made of specially prepared "gutta percha" felt, pressed into tire form, the outer part being of rubber and the inside lining of cotton bear-back. The felt is 5/8 of an inch thick, but when the inner tube is inflated becomes less than one-half its original thickness. The protector is made in various sizes to fit the tire exactly. It is

CASETTE TIRE PROTECTOR

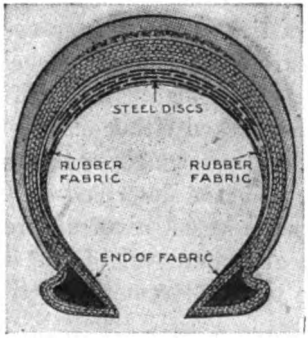

JELCO-ATLAS INNER CASE

entirely loose at the tread, being caught by cement along the beads only, and can be transferred from one tire to another by loosening the cement with gasoline.

The Cox tire cushion is another protector of felt and fabric which it is claimed not only prevents punctures and protects the inner tube from chafing and pinching, but keeps the tire cool in hot weather. A smaller inner tube may be used with it at a saving in cost.

In the Jelco-Atlas inner case the principle of the Lee puncture-proof tire has been applied to a tire protector. Several layers of small overlapping steel disks are so vulcanized in a rubber cushion that they present practically a continuous, flexible band which prevents punctures. The International tire protector with its copper plated steel disks is similar, also the Armored inner tire, which consists of an outer layer of graphite coated tire fabric, two overlapping layers of thin

steel disks, a three-ply rubber cushion vulcanized into an integral unit with the interposed armor plates and an inner layer of tire fabric. All of these inner tires are formed to fit the tire exactly so that it is unnecessary to cement or otherwise secure them to the tire, thus preserving the elasticity and resilience of the tire casing.

The National pneumatic tire saver consists of a heavy rubber inner tire or liner encasing three resilient spring steel ribbons that protect the tread and side walls of the casing. The extra thickness of this liner is overcome by using smaller inner tubes and inflating at less than normal pressure.

Pressure Gages

Tire manufacturers have so emphasized the importance of proper tire inflation according to tire size and load that most motorists now carry a tire pressure gage as part of their automobile tool kit. Most gages are of substantial nickeled tubing ⅜ to ⅝ inch in diameter and 2½ to 4½ inches in length with a scale indicating air pressure in pounds marked either on the tubing or on a plunger sliding within it. Those pressure gages and regulators which are part of the tire valve mechanism are described in Chapter XXXVI.

Schrader's Universal tire pressure gage applied to the end of the valve, after removal of the dust cap, records the pressure of the air in the tire and remains at the reading until returned to zero. This,

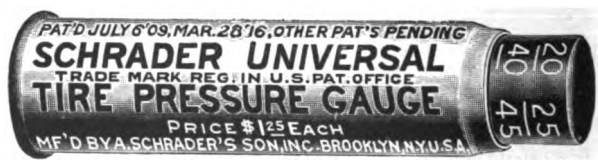

Schrader Universal Gage

and the fact that it can be used with the valve in any position, appeals to the motorist. There is also a very small pencil type only 2½ inches long.

The Twitchell air gage was the first pencil gage on the market intended to be carried in the vest pocket like a fountain pen. Numerous improvements have been made since it was first brought out in 1909. What particularly distinguishes it from other pencil type gages is the locking device of the indicator bar with its ratchet teeth. The gage remains set at the pressure of air in the tire. Any force strong enough to make the bar slip, throws it back to zero; it indicates

the true pressure or nothing. For easy reading the figures are white on a black background. In the dark, the pressure may be read by counting the notches with a finger, each notch being five pounds beginning at twenty. Owing to its long base the gage may be held at any angle to the valve to avoid striking the hub and still register accurately.

TWITCHELL AIR GAGE

Another pencil type of gage, the Allen Tyrometer, is pressed on the valve stem, after the dust and valve caps have been removed, the rubber washers in its end fitting air tight to the rim of the valve and the valve plunger being at the same time pressed open, so that the air is admitted to the gage. Acting on a plunger, controlled by an accurate spring tension, which is forced up against the spring pressure, the air pressure is registered on a scale by the sliding band that encircles the gage on the outside. When the gage is removed from the valve, this band retains its position, so that the gage may be taken away for convenient reading without affecting the registration.

ALLEN TYROMETER

The indicator on the Staput gage does not drop back to zero as soon as the air pressure is released by its removal from the valve, but remains in the postion to which the air pressure has forced it, until it is purposely returned to place by hand, thus permitting accurate reading in a good light and convenient situation.

A few caliper gages have been brought out for testing pneumatic tires to determine the proper inflation for tires of various sizes. The beam of the Goodrich tire caliper has two graduations, the upper scale showing the size of the tire and the lower the load on the ground. To test a tire the movable arm is set at the point where the caliper will just fit over the tire at the top or point farthest from the ground, and the point of register on the scale is noted. Then the arm is moved to the mark on the lower scale corresponding to this point of register.

The tire is then calipered at the bottom, where the load rests on it. If the tire is not flattened so that the sides touch the arms of the caliper it should be deflated until the caliper just slips over it; if the

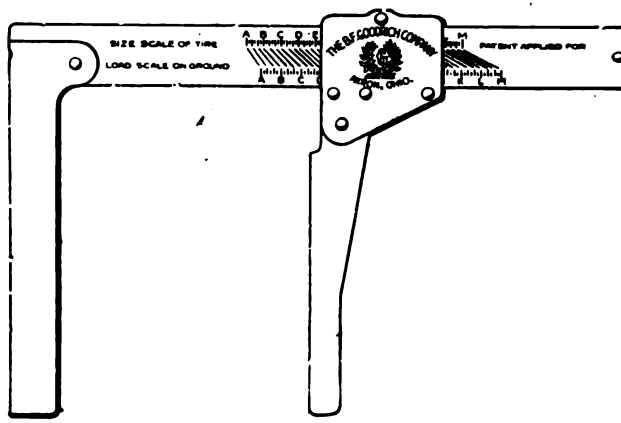

GOODRICH TIRE CALIPER

tire is too much flattened to permit the caliper to slip over it it should be inflated until its width under load just equals the distance between the arms of the caliper, thus assuring inflation according to load.

RUNNING TIRE CALIPER

The Running caliper is double, one set of arms being adjusted to fit the width of the tire at the top of the wheel, while the other set automatically fits the width of the tire where it rests on the ground. As the load-carrying part of the tire is slightly flattened, if it is prop-

erly inflated, the width of the tire at this point bears a certain relation to the width of the normal tire. Acting on this principle, the caliper indicates if the tire is correctly inflated, and also if the inflation is sufficient for the load applied—a heavy load naturally requiring a higher inflation than a light one.

Tire Alarms

Aside from those whistling devices attached to inner tube valves, and which are referred to in Chapter XXXVI, there are several tire alarms working on various principles and giving warnings of different sorts when the air pressure in a tire falls below the safe minimum.

The Wells leak alarm is a rubber ball made integral with the inside of the inner tube and provided with a whistle which gives an effective alarm when the tube becomes deflated to a predetermined extent.

The Stevens soft tire alarm consists of a bracket secured to one spoke of the wheel near the hub, having at one end a bell and at the other end a pivoted trip arm yieldably held against the side of the tire, also a bell striker adapted to be released by the trip arm to strike the bell when the tire becomes deflated.

The Safety tire signal explodes a cap placed between the tire and the rim of the wheel when the air pressure reaches twenty-five pounds below normal, so that no damage is done to either casing or inner tube. The device is inserted through the rim of the wheel and comes in contact with the wall of the inner tube, the pressure of the latter keeping it locked just as long as the tire is properly inflated. When the pressure fails, however, the lock is released and the cap is fixed.

Cri-Cri, a device which originated abroad, is named for the sharp metallic click it emits when the tire is running soft. It consists of a steel strip or tongue, buckled in the middle, one end in contact with the side of the tire, the other held in a clamp that is hooked under the rim and is braced against the felloe of the wheel so that the tongue only just touches the tire when properly inflated. When the tire becomes soft, the tongue is bent out and in each time the wheel revolves, the buckled portion emitting a sharp clicking signal. The device is applied by pressing the beaded edge of the tire to one side and fixing the hook on the middle of the device over the rim of the wheel.

Puncture Finders

Small punctures are often difficult to find without resort to the bubble test under water, which is usually not available for roadside

repairs. Moreover, the wet tube must be dried before a satisfactory repair can be made. Several mechanical puncture finders on the market are simple, compact, effective, always available and leave the tube ready for the repair.

The Harris puncture finder comprises a quadrant shaped box *A* divided into four compartments. The inside curve *B* is made to fit the tire *C* and at the lower portion of each compartment is a piece of fine gauge *D*, above which is placed a piece of very light cotton. When the device is moved around the tread to a spot directly over a leak,

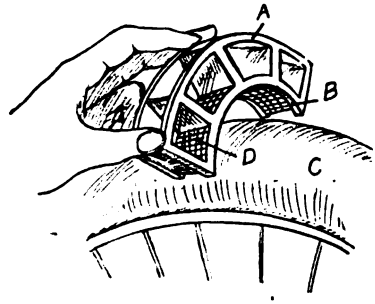

HARRIS PUNCTURE FINDER

the light cotton will be agitated by the escaping air, thus indicating the exact position of the puncture. It is a device for smooth-tread motorcycle tires.

The Du Tell puncture finder consists of a frame curved to conform to the tread of the tire. On the under side is a fine mesh screen, and on top a sort of transparent celluloid window. On the screen are small strips of very thin cork. The device is placed against the tire and moved about. When the leak is reached the pieces of cork will fly up from the air pressure, thus indicating its exact location.

MUD SPLASH GUARDS

In Paris the use of mud splash guards capable of preventing lateral splashing of mud from the wheels of motor vehicles on to pedestrians on the sidewalk is obligatory, and most American pedestrians wish it were so in this country, especially in the case of heavy trucks. While the question of splash guards in some American cities is not a very urgent one, owing to the excellent condition of asphalt, grouted pavement and tarred macadam streets, in certain sections of many other cities it is quite as desirable as in most cities of Europe and England.

Some years ago the municipality of Paris, in conjunction with the Paris omnibus companies and the Automobile Club of Seine and Oise, offered prizes for the best splash guards, the points to be taken into consideration being effectiveness, ease and simplicity of attachment, economy in construction and in use, weight and appearance. Exhaustive tests of 469 attachments found ten promising ones, but none fully effective. The prefect of police nevertheless made their use obligatory, as several of the devices were found to be fairly useful, as well as durable and cheap.

Splash guards formed of such material as leather, rubber, canvas, chain mail or brush material hanging from the hub cap and maintained in the correct position by springs or other attachments was con-

MUD SPLASH GUARD

sidered the most suitable all-around type. The first prize apparatus was a leather-bound brush hanging from the hub cap by means of a suitable stay, with two coil springs to prevent it being carried round with the wheel, and the stay itself passed through the mudguard in order to give greater rigidity. The second prize device was similar in principle, but differed in the method of attachment. It consisted of a brush hanging from the extremity of a horse-shoe stay secured to the hub cap and the steering pivot (in the case of a front wheel). Its best feature was the excellent mounting to the hub cap, and the provision made for keeping out dirt and keeping in oil. In the third prize device the guard was made entirely of leather and was also hung from the hub cap. A suitable disk was mounted on the cap and

engaged in a groove on the inner face of a ring with a descending arm to which the splasher was hooked. Its own weight kept it in correct position.

Miscellaneous Accessories

The Wald tube deflator is quickly attached to the valve of the tire. Its jaws are made of wood to prevent injuring the valve thread. Its grip is so tight that when once closed the jaws cannot be jerked loose.

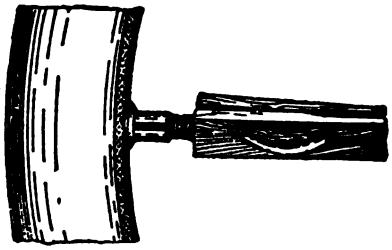

Wald Tube Deflator

The Wonder deflator and combination tool clamps automatically on the valve stem and holds it down until the tire is deflated. It may also be used as a Prest-O-Lite key, screwdriver, bottle opener and cork remover.

Although similar in part to the ordinary type of security bolt for pneumatic tires, the English bolt here shown has the customary metal

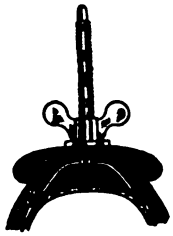

English Security Bolt

head with its under seat covered by canvas, this canvas being sealed by a piece of rubber and the two forming a pneumatic cushion which serves to hold the tube well out of the way of both bolt and outer cover when fitting, minimizing the risk that the tube will be nipped under the beads of the cover or under the security bolts.

To prevent overloading, with consequent damage to motor trucks, tires and especially to the highways, the Loadometer has been invented. It is a portable instrument having a screw jack mounted on its plunger. The base of the instrument is an oil-filled cylinder in which the plunger operates, and the weight carried by the plunger is indicated on a high-pressure gage connected to the oil chamber.

By placing a pair of Loadometers under the rear axle of a truck where the greatest weight is carried and jacking up the rear wheels clear of the ground, the maximum load per inch of tire width is easily

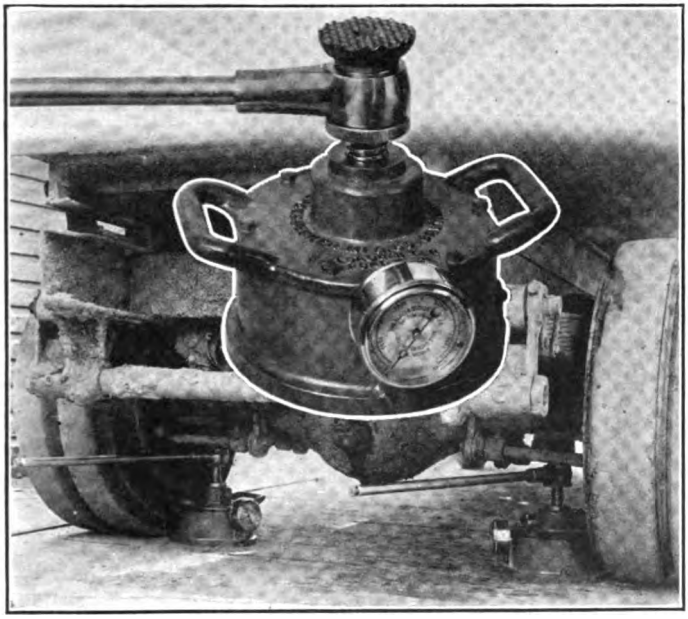

B. & D. LOADOMETER

determined. The jack handles can be readily detached from the instrument so that a pair of Loadometers can be easily carried about in a small automobile. County and state road commissioners are using these devices extensively to prevent abuse of improved roads.

The dealer in motorcycles has been considerably puzzled to know what tire should go on what rim; for there have been three standard motorcycle rims, the "Old Style," the "B B" and the "C C". But this puzzle was solved for the dealer by a gage which instantly tells what size of tire should be used on any particular rim. It is necessary

simply to insert this gage into the rim in order to get at the correct gage length. The proper size tire to go with the rim thus indicated is noted beneath the rim type on the section of the gage that fits the rim.

GOODYEAR MOTORCYCLE RIM GAGE

Many motorists carry spare inner tubes loose in the tool box or under the seat, only to find that when wanted they have moved about and worn through on the folded edges. To prevent this and keep the

GILBERT INNER TUBE CASE

tubes clean and free from oil, inner tube bags of rubberized fabric with snap fasteners are made by several tire manufacturers. They cost little and will save more than the price of one tube in a season.

CHAPTER XXXVIII

TREADS AND ANTI-SKIDDING DEVICES

Bicycle and Motorcycle Anti-Skid Tires

THE inconvenience and danger of skidding were known to the early bicycle riders, and the makers sought to avoid accidents by roughening the surface of the tires in various ways. It was important, however, not to allow the devices to interfere with the resilience of the tire, so that bicycle anti-skid treads have been practically limited to ribs, fretwork or other regular protuberances molded on the surface of the tire. Anti-skid treads for bicycles early became common in England and Germany, while still less common in France and the United States. At present, however, the anti-skid bicycle tire is everywhere general. The development of the motorcycle, with its high speed, drew attention much more strongly to the danger of skidding, and yet the necessity of resilience in the tires was hardly less than in the case of the bicycle. Consequently the makers were held down to rubber treads, though the corrugations in these were made deeper and more elaborate.

Functions of Automobile Anti-Skid Treads

The general adoption of anti-skids has come within recent years, owing to the great developments in automobiling. All such treads serve two purposes, and many of them serve three or four. This is because of certain peculiarities in the automobile, which must be considered before the functions of the anti-skid tread may be rightly understood.

On a hard, dry road, or on ice, a rubber tire will probably hold better than one of any other material of the same shape. In almost all cases a smooth rubber surface gets a better grip than a smooth iron surface, so that all rubber tires are to some extent anti-skids. A pneumatic will skid more than a solid tire, and a soft pneumatic will skid more than one that is blown up hard. Other things being equal, the more road contact there is, the more is the tendency to side slip, because the less will be the specific pressure upon the road at any point. On the other hand, the pull or traction of the drive wheels varies directly with the road contact, so that tires are specially designed with flat treads, to increase the road contact. Flat treads also have a certain non-skidding effect when the sides come up square.

Thus it is seen that drive wheels need some provision against both forward and side slip. These two contingencies are apt to occur at once, so that, for the time being, the car is beyond control, it being impossible either to stop, start, or steer it. Such a condition is always awkward, and sometimes disastrous. It is the rear wheels which are most apt to skid, and spinning the rear wheels and changing the direction of the front wheels toward the skid may help. The philosophy of this is that a swiftly moving body tends to keep to a straight line. When the direction is suddenly changed, inertia tends to keep it in the original path. If the force of this inertia be represented by a line and the force of the impetus in the other direction be represented by another line, and a parallelogram be plotted from these two lines, the resultant of these two forces will tend to make the car skid along the line of the diagonal of the parallelogram. If the front wheels hold, as is usually the case, the rear wheels may be thrown around until the car actually heads the other way. Once the skidding is felt, a skilled driver will turn his front wheels in the direction of skidding, and brake the rear wheels gently until the car stops, if possible, or spin the wheels until they have regained their foothold. By turning the front wheels the other way, the dangerous whirling motion is only increased.

The Development of Automobile Anti-Skids

Another thing which may be mentioned here, is that the demand for liveliness in automobile tires led for a long time to their being made too light for rough usage, resulting in punctures and blow-outs. As a consequence, the demand for anti-skids was generally accompanied by a demand for a covering that would strengthen the tire against inside pressure and also protect it against outside injury. Thus the result was that motorists bought flimsy tires with smooth, round treads, sacrificing everything to resilience, and then, frightened by the puncture bugbear, covered their tires with protectors designed to give traction, prevent skidding, punctures and blow-outs, and to prolong the life of the tire. Resilience was sacrificed, and the effect of the protector was often harmful to the tire. In recent years, however, cord tires of heavier construction with molded rubber anti-skid treads have afforded the heavier cars of today an adequate degree of resilience with great immunity to tire troubles and skidding.

The development of automobile anti-skids has been along lines quite different from that of bicycle and motorcycle tires, because the makers have been allowed a freer hand. A soft pneumatic tire contributes greatly to speed in each case; but where the good of the ma-

chinery is mostly concerned in the case of the motor car, in the case of the cycle the rigid frame makes the rider dependent upon the tires for whatever comfort he gets. In most cases the cyclist will take his chances on skidding, rather than give up even a little of the springiness of his tires. The automobilist, however, to whom skidding is not so much an inconvenience as a danger, is in a position to secure good traction regardless of tire resilience, and can protect himself against vibration by body springs and cushions. He can even run on solid tires, without hurting anything but the machinery. Consequently, if the anti-skid feature is effective, he considers that chiefly.

Classes of Anti-Slipping Devices

Hundreds of patents have been granted for devices designed to prevent tire slipping. One class comprises all tires whose anti-slipping feature results from indentations or protuberances molded upon

Bailey's "Won't Slip" Tread

the tire itself, including corrugated, flat and sharp treads, and twin tires. A second class includes all devices employing metal rivets, spikes, studs, or plates in combination with leather, either detachable or vulcanized upon the tire. Another class takes in all anti-skids made by vulcanizing studs or spikes into the rubber shoe. A fourth classification would comprise all other devices, such as chains, wires, and all-metal anti-skids.

Non-Skid Rubber Tires

The first group was suggested by cycle anti-skids and certain shapes of solid tires. In this group the pioneer was the Bailey "Won't Slip" tread, for a long time used by all of the important tire manufacturers. Today, however, each company has its own type of molded

rubber anti-skid tread. Indeed, they are a very general type of trade-mark as indicated by many accompanying illustrations of registered tread designs beginning on the opposite page.

Racing tires were sometimes made with transverse sections in the rubber, or with square treads, either smooth or corrugated. The sharp tread, very greatly lessened the side slip and road suction, though it was less fitted for high speeding, through lack of road contact. Deep corrugations were generally used in combination with flat treads, so

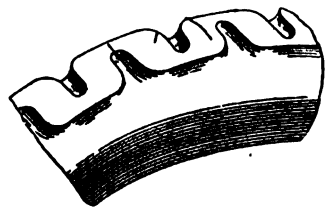

ORIGINAL SILVERTOWN TREAD

as to bring more of the ribs into play. In 1903 Falconnet-Perodeaud brought out a flat tread in which the anti-skid feature was made prominent.

Although a molded rubber anti-skid tread wears off in time, so does a metal-studded or any other tread that is put to the severe strain which automobile tires are subjected. But the wearing off of the knobs of a rubber tread does not wear the tire nor imply that the tire has lost its non-skid qualities, for when the center has worn smooth the side knobs come into play and perform their duty so well that a rubber knobbed-tread tire is a non-skid tire until it is entirely worn smooth beyond all point of contact with the road, after which it can be retreaded and will be as good as new if the fabric remains undamaged.

Comparison of the performance of a rubber-knobbed and a metal-studded tire on a sandy road conclusively indicates the superiority of the former. It will be observed that in operation a metal-studded tire throws the sand out from under it as it grips the ground, and that it cuts into the sand, leaving a track similar to that made by a heavy article being dragged along. On the other hand, a rubber-knobbed tire throws out very little sand behind and examination of the roadbed shows the imprint of each little knob as perfect in the sand as though it had been pressed there in a careful manner, indicating that a rubber-knobbed tread is more satisfactory in action and results and far less injurious to the roadbed.

Pennsylvania.

Goodyear No-Rim-Cut.

Quaker City.

Hendrie.

Hood Arrow.

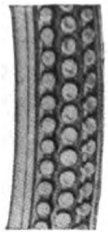
Fisk.

Nassau.

Daisy.

Pennsylvania Vacuum Cup

Globe.

Kismet.

Trusty.

Empire.

Goodrich Safety.

Diamond Squeegee

Racine Country Road.

Miller.

Pullman.

Congress.

Tyrian.

Firestone.

Bailey.

Imperial.

W. M.

U. S. Nobby.

Kant Slip.

Maltese Cross.

Lee Zig-Zag.

Savage.

Cog.

Gordon.

Worm.

Mansfield.

Sterling Vacuum Bar.

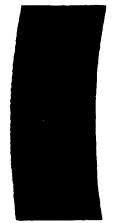
Ajax.

Empire.

Republic Staggard.

M. & M.

Special.

Falls.

Mattson.

Hemisphere.

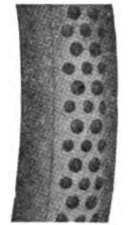
Dimple.

Swinehart.

Falls Cord.

Dunlop Traction.

Carspring.

Marathon.

Dreadnaught

Pharis.

Security

Federal Rugged.

U. S. Chain.

Buckskin.

Braender Bull Dog.

Vitalic.

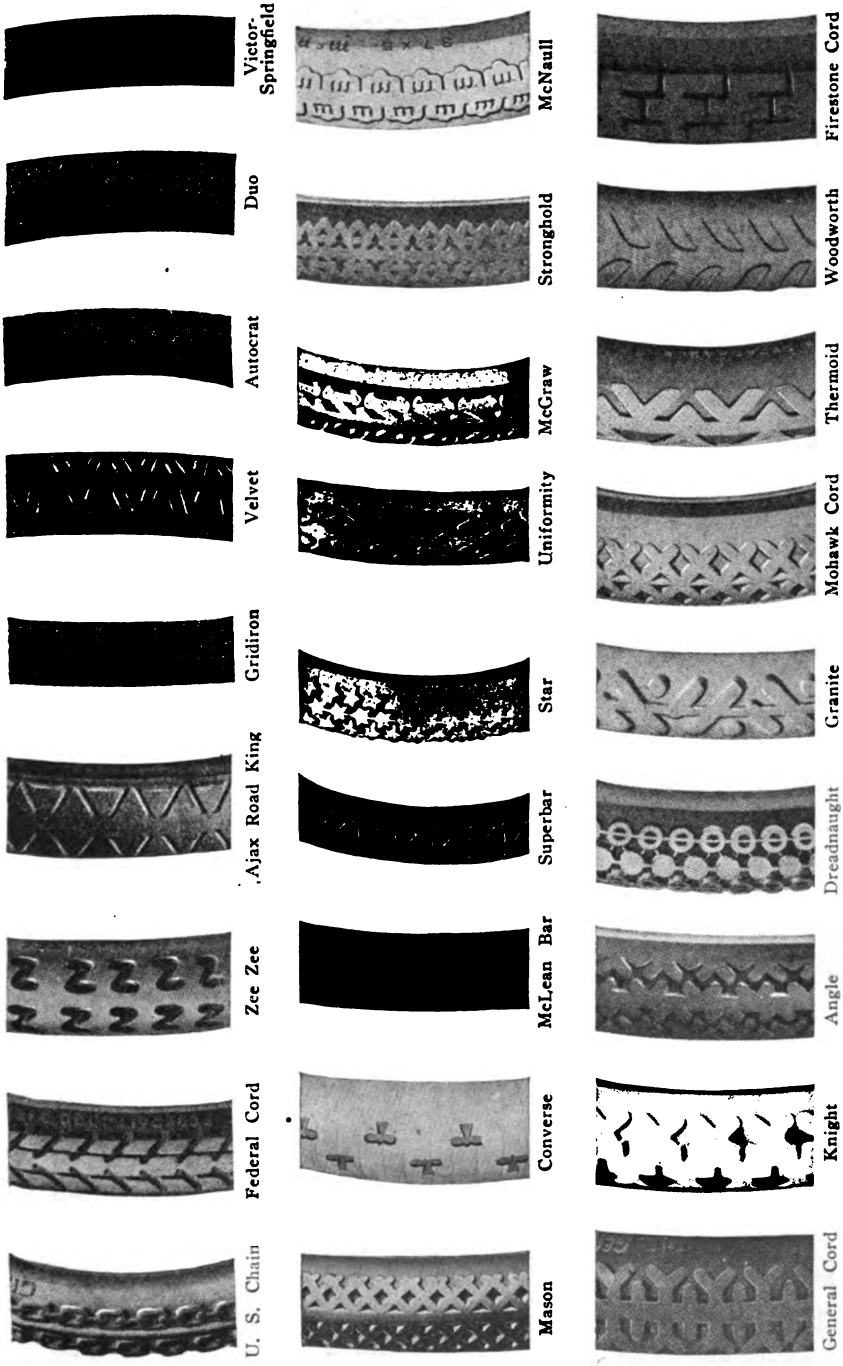
U. S. Chain
Federal Cord
Zee Zee
Ajax Road King
Gridiron
Velvet
Autocrat
Duo
Victor-Springfield
Mason
Converse
McLean Bar
Superbar
Star
Uniformity
McGraw
Stronghold
McNaull
General Cord
Knight
Angle
Dreadnaught
Granite
Mohawk Cord
Thermoid
Woodworth
Firestone Cord

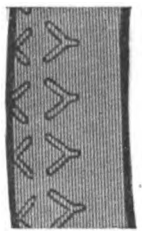
Delion

Cupples

McCreary

Wilson Vacuum

Mohawk Keaton

Revere Cord

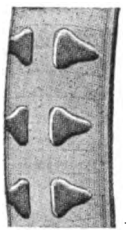
Mecca 400

Smith

Hercules

Goodrich Cord

Keystone

Brunswick

National

Malkonite

Combination

G. & J. Cord

Century

Stalwart

Hanes

Brunswick Cord

Kelly-Springfield Cord

Hartford Cord

General Cord

Strongheart

Brictson

America

Racine

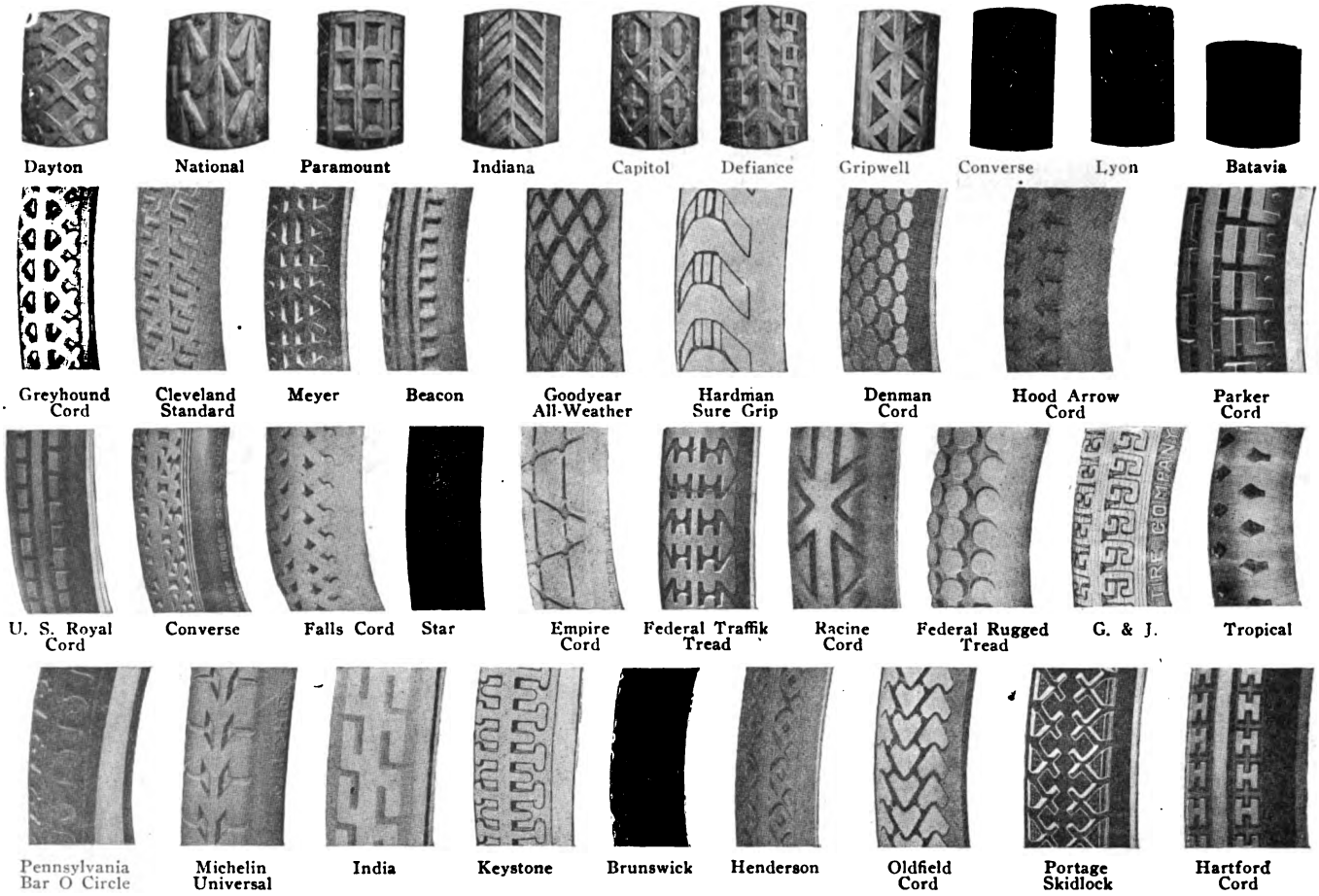
Dayton
National
Paramount
Indiana
Capitol
Defiance
Gripwell
Converse
Lyon
Batavia
Greyhound Cord
Cleveland Standard
Meyer
Beacon
Goodyear All-Weather
Hardman Sure Grip
Denman Cord
Hood Arrow Cord
Parker Cord
U. S. Royal Cord
Converse
Falls Cord
Star
Empire Cord
Federal Traffik Tread
Racine Cord
Federal Rugged Tread
G. & J.
TIRE COMPANY
Tropical
Pennsylvania Bar O Circle
Michelin Universal
India
Keystone
Brunswick
Henderson
Oldfield Cord
Portage Skidlock
Hartford Cord

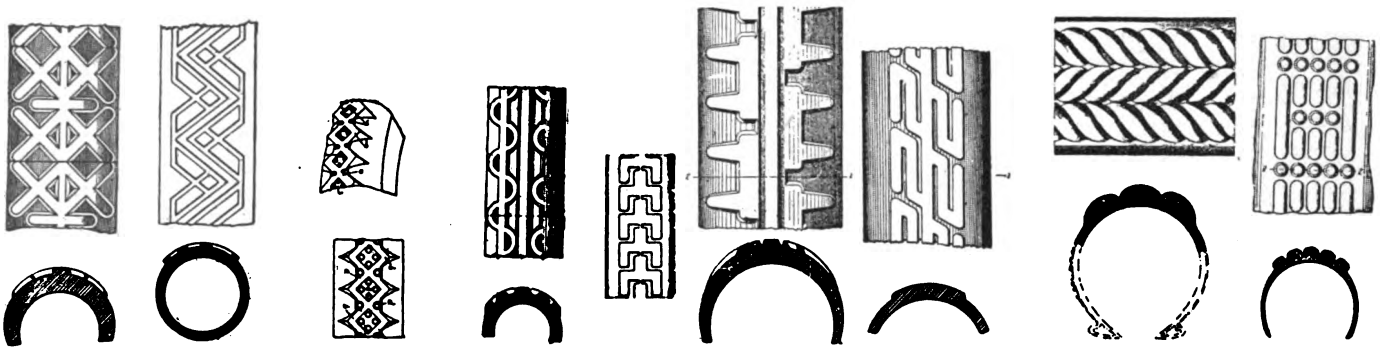

1. 2. 3. 4. 5. 6. 7. 8. 9.

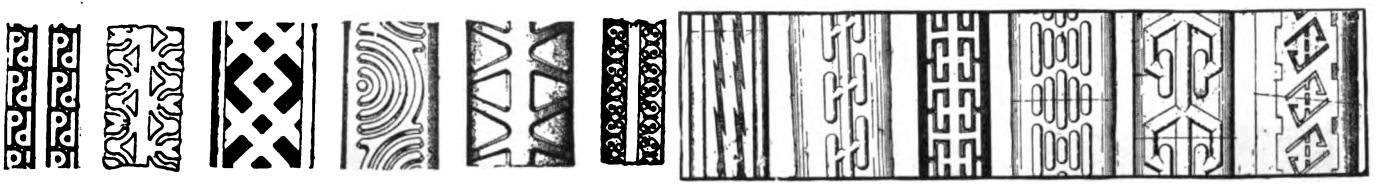

10. 11. 12. 13. 14. 15. 16. 17. 18. 19. 20. 21.

Cut No.	Patent No.	Patentee or Assignee and Address
(1).	49,754.	E. P. Altenberg, East Palestine, Ohio.
(2).	49,786.	The B. F. Goodrich Co., New York City.
(3).	49,792.	G. W. Beldam, Ealing, England.
(4).	49,811.	C. A. Westover, Youngstown, Ohio.
(5).	49,836.	The Sebring Tire & Rubber Co., Sebring, Ohio.
(6).	49,877.	The Victor Rubber Co., Springfield, Ohio.
(7).	49,901.	The Amazon Tire & Rubber Co., Akron, Ohio.
(8).	49,947.	S. J. Bogan, Torrance, California.
(9).	49,969.	The B. F. Goodrich Co., New York City.
(10).	50,567.	J. D. Kline and C. A. Barnholth, Akron, Ohio.
(11).	50,644.	H. S. Blynt, Binghamton, New York.
(12).	50,655.	G. P. Herrick, New York City.
(13.)	50,673.	S. S. Adams, Lafayette, Tennessee.
(14).	50,681.	United & Globe Rubber Mfg. Cos., Trenton, New Jersey.
(15).	50,769.	E. Von Vargyas and J. J. Vavora, Binghamton, New York.
(16).	50,931.	J. M. Gilbert, New York City.
(17).	50,956.	The B. F. Goodrich Co., New York City.
(18).	50,961.	Racine Rubber Co., Racine, Wisconsin.
(19).	50,976.	The B. F. Goodrich Co., New York City.
(20).	50,977.	The B. F. Goodrich Co., New York City.
(21).	51,018.	F. T. Faircloth, San Francisco, California.

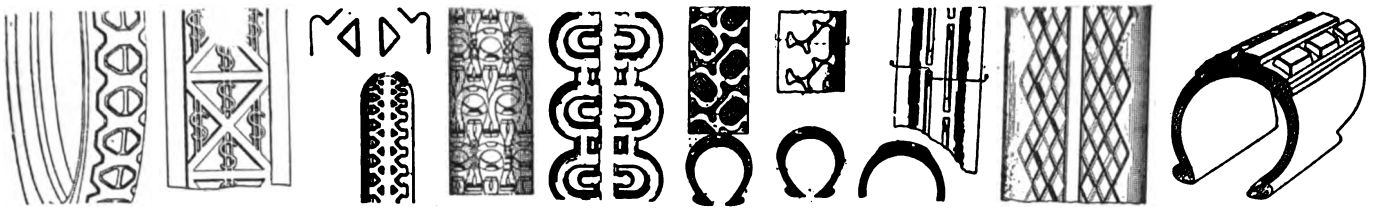

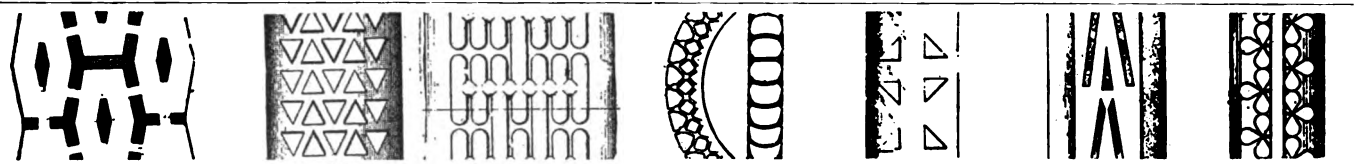

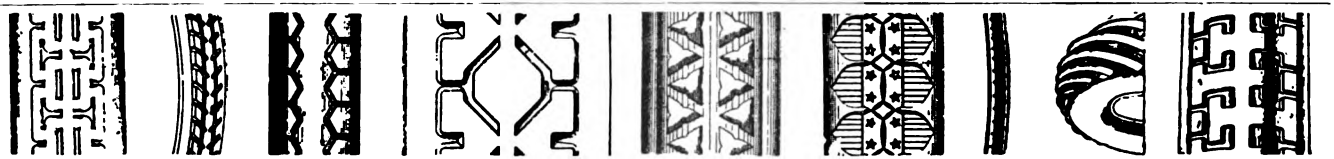

Cut No.	Patent No.	Patentee or Assignee and Address
(1).	50,352.	R. H. Keaton, San Francisco, California.
(2).	50,360.	C. B. Reynolds, Sawtelle, California.
(3).	50,361.	W. A. Robbins, Glen Ridge, New Jersey.
(4).	50,380.	W. D. Freese, Akron, Ohio.
(5).	50,431.	The Norwalk Tire & Rubber Co., Norwalk, Connecticut.
(6).	50,120.	W. B. Buckley, New York City.
(7).	50,121.	W. B. Buckley, New York City.
(8).	50,134.	R. H. Keaton, San Francisco, California.
(9).	50,190.	Hood Rubber Co., Watertown, Massachusetts.
(10).	50,202.	E. Hopkinson, New York City.
(11).	50,793.	M. F. Oliver, Berkeley, California.
(12).	50,840.	J. C. Kocontes, River Forest, Illinois
(13).	50,915.	The B. F. Goodrich Co., New York City.

Cut No.	Patent No.	Patentee or Assignee and Address
(14).	50,873.	E. A. Jones, Los Angeles, California.
(15).	50,828.	W. B. Buckley, New York City.
(16).	50,871.	F. T. Faircloth, San Francisco, California.
(17).	50,881.	E. Von Vargyas, Washington, D. C.
(18).	52,114.	The Long-Wear Rubber Co., Elyria, Ohio.
(19).	52,116.	B. H. Pratt, Milwaukee, Wisconsin.
(20).	52,122.	S. R. Vashinder, Fulton, Ill.
(21).	52,153.	The Star Rubber Co., Akron, Ohio.
(22).	52,170.	W. C. Owen, Cleveland, Ohio.
(23).	52,178.	H. A. Phillips and J. G. Stamm, Cleveland, Ohio.
(24).	52,224.	Indiana Rubber & Insulated Wire Co., Jonesboro, Ind.
(25).	52,227.	J. W. Richardson, Detroit, Mich.
(26).	52,232.	A. E. Wing, Cleveland, Ohio.

1.

2.

3.

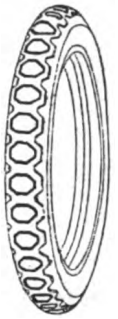

4

5.

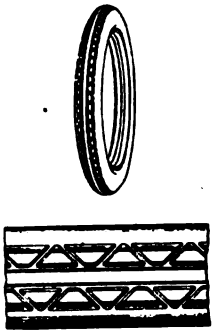

6.

7.

8. 9. 10. 11. 12. 13. 14.

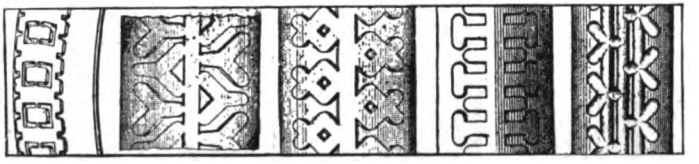

15. 16. 17. 18. 19.

Cut No.	Patent No.	Patentee or Assignee and Address
(1).	50,265.	The Lancaster Tire & Rubber Co., Lancaster, Ohio.
(2).	50,269.	P. De Mattia and B. De Mattia, Clifton, New Jersey.
(3).	50,282.	G. W. Odell, South Bend, Indiana.
(4).	49,927.	R. H. Keaton, San Francisco, California.
(5).	49,958.	O. W. Dunham and F. W. Willis, Toronto, Ont., Can.
(6).	49,958.	W. R. Denman, Akron, Ohio.
(7).	49,962.	G. Crowley, Hartford, Connecticut.
(8).	51,413.	G. W. Greene, East Liverpool, Ohio.
(9).	51,418.	C. L. Landon, Akron, Ohio.
(10).	51,428.	W. H. Owens, Muskogee, Okla.

Cut No.	Patent No.	Patentee or Assignee and Address
(11).	51,428.	C. L. Archer, Minneapolis, Minn.
(12).	51,429.	C. L. Archer, Minneapolis, Minn.
(13).	51,435.	W. C. Beckwith, Fostoria, Ohio.
(14).	51,452.	W. C. Beckwith, Fostoria, Ohio.
(15).	51,736.	Para Tire Co., New York City.
(16).	51,746.	The East Palestine Rubber Co., East Palestine, Ohio.
(17).	51,747.	The East Palestine Rubber Co., East Palestine, Ohio.
(18).	51,788.	Gryphon Rubber & Tire Corp., New York City.
(19).	51,829.	T. J. Whalen, New Castle, Penna.

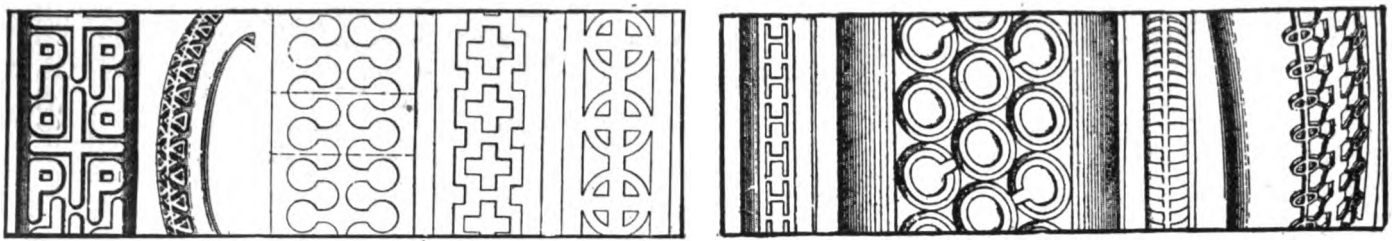

1. 2. 3. 4. 5. 6. 7. 8. 9.

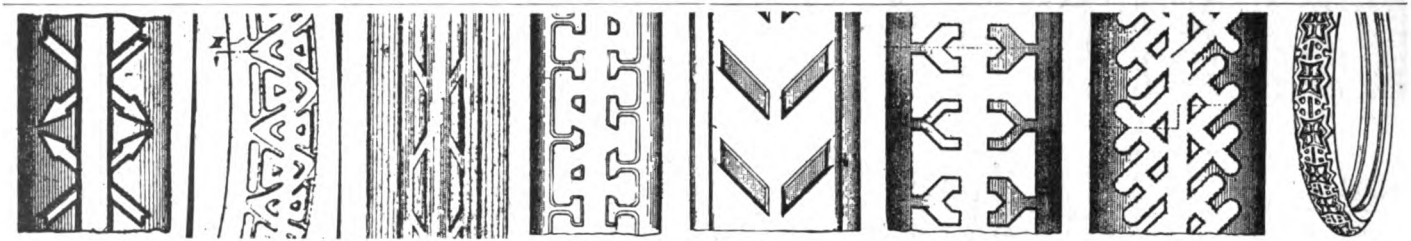

10. 11. 12. 13. 14 15. 16. 17.

Cut No.	Patent No.	Patentee or Assignee and Address
(1).	51,072.	Perfection Tire & Rubber Co., Chicago, Ill.
(2).	51,184.	The Gordon Tire & Rubber Co., Canton, Ohio.
(3).	51,193.	R. F. America, Philadelphia, Pa.
(4).	51,230.	C. A. Goetze, Minneapolis, Minn.
(5).	51,231.	C. A. Goetze, Minneapolis, Minn.
(6).	52,054.	The Dreadnaught Tire & Rubber Co., Orangeville, Md.
(7).	52,055.	F. M. Hale and F. C. McLaughlin, Kent, Ohio.
(8).	52,062.	J. B. McDevitt and M. Greenspan, Chicago, Ill.
(9).	52,067.	J. Tenney, Jr., Plainfield, N. J.

Cut No.	Patent No.	Patentee or Assignee and Address
(10).	51,391.	A. L. Pearce, Philadelphia, Pa.
(11).	51,370.	A. A. Garthwaite, Conshohocken, Pa.
(12).	51,346.	G. H. Lewis, Chicopee Falls, Mass.
(13).	51,683.	The Mason Tire & Rubber Co., Kent, Ohio.
(14).	51,697.	Indiana Rubber & Insulated Wire Co., Jonesboro, Ind.
(15).	51,898.	Hewitt Rubber Co., Buffalo, N. Y.
(16).	51,899.	Hewitt Rubber Co., Buffalo, N. Y.
(17).	51,975.	W. A. Stevens, San Francisco, Calif.

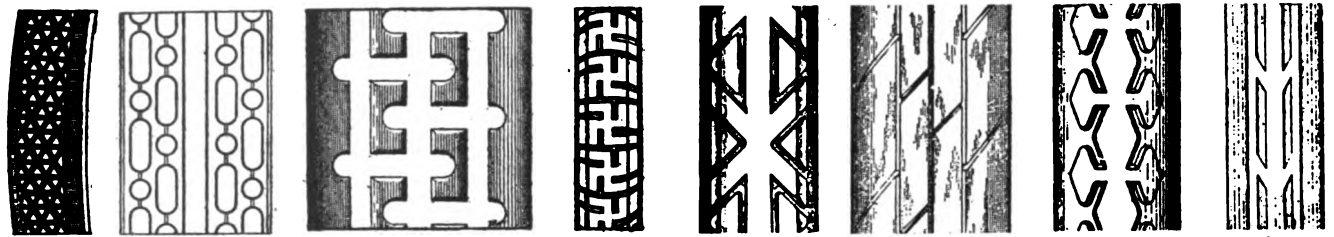

Cut No.	Patent No.	Patentee or Assignee and Address
(1).	51,499.	C. L. Archer, Minneapolis, Minn.
(2).	51,512.	G. F. Kreitlein, Indianapolis, Ind.
(3).	51,522.	The Akron Biltwell Tire & Rubber Co., Akron, Ohio.
(4).	51,528.	The Brunswick-Balke-Collender Co., Chicago, Ill.
(5).	51,994.	Ajax Rubber Co., New York City.
(6).	51,996.	C. A. Shriver, Toledo, Ohio
(7).	52,026.	J. Froehlich, New York City.
(8).	52,027.	The Fisk Rubber Co., Chicopee Falls, Mass.
(9).	52,725.	Dunlop Tire & Rubber Goods Co., Ltd., Toronto, Ont., Can.
(10).	52,731.	T. J. Edwards, Akron, Ohio.
(11).	52,732.	T. J. Edwards, Akron, Ohio.
(12).	52,749.	The Goodyear Tire & Rubber Co., Akron, Ohio.
(13).	52,822.	H. H. Hazeltine, Tacoma, Wash.
(14).	52,066.	J. & D. Tire Co., Charlotte, N. C.
(15).	52,066.	F. S. Dickinson, New York City.
(16).	52,070.	The Miller Rubber Co., Akron, Ohio.

Cut No.	Patent No.	Patentee or Assignee and Address
(17).	53,083.	Norwalk Tire & Rubber Co., Norwalk, Conn.
(18).	53,096.	The Dayton Rubber Manufacturing Co., Dayton, Ohio.
(19).	53,100.	A. E. Braden, Tacoma, Wash.
(20).	53,108.	Converse Rubber Shoe Co., Malden, Mass.
(21).	53,111.	W. R. Blowers, Omaha, Neb.
(22).	53,112.	W. R. Blowers, Omaha, Neb.
(23).	53,113.	W. R. Blowers, Omaha, Neb.
(24).	53,114.	W. R. Blowers, Omaha, Neb
(25).	53,116.	Combination Rubber Manufacturing Co., Bloomfield, N. J.
(26).	53,129.	The McGraw Tire & Rubber Co., East Palestine, Ohio.
(27).	53,133.	The Gordon Tire & Rubber Co., Canton, Ohio.
(28).	53,143.	The Oldfield Tire Co., Cleveland, Ohio.
(29).	53,146.	J. & D. Tire Co., Charlotte, N. C.
(30).	53,151.	C. P. L. Huston, Plainfield, N. J.
(31).	53,190.	Wicks' Tire & Rubber Products Co., Seattle, Wash.

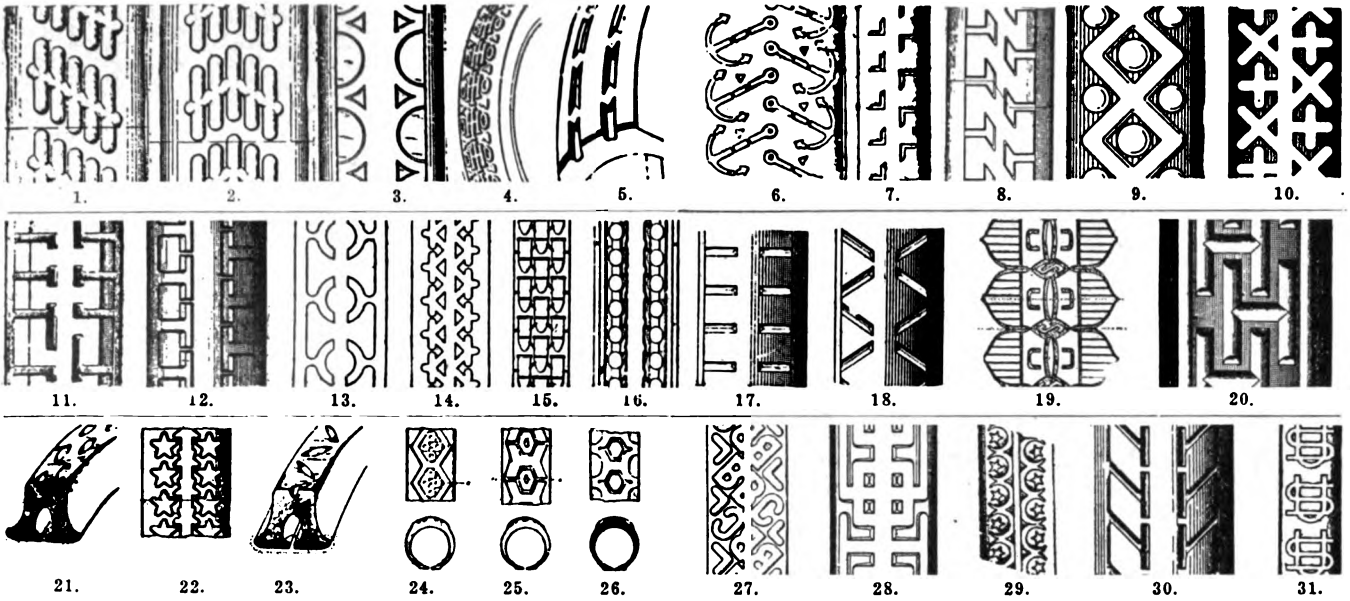

Cut No.	Patent No.	Patentee or Assignee and Address
(1).	51,866.	The B. F. Goodrich Co., New York City.
(2).	51,867.	The B. F. Goodrich Co., New York City.
(3).	51,895.	G. S. Towne, San Francisco, Calif.
(4).	51,917.	W. Bruess, Sandusky, Ohio.
(5).	51,939.	The Goodyear Tire & Rubber Co., Akron, Ohio.
(6).	51,544.	P. D. Beck, Lawrence, Kan.
(7).	51,546.	W. B. Buckley, Overbrook, Penna.
(8).	51,555.	Michelin Tire Co., Milltown, N. J.
(9).	51,616.	Giant Tire & Rubber Co., Akron, Ohio.
(10).	51,580.	The Mutual Motor Stores Co., Cleveland, Ohio.
(11).	52,266.	The Rubber Products Co., Barberton, Ohio.
(12).	52,298.	Armstrong Rubber Co., Newark, N. J.
(13).	52,303.	A. E. Pearce & H. H. Swan, Ashtabula, Ohio.
(14).	52,304.	A. E. Pearce & H. H. Swan, Ashtabula, Ohio.
(15).	52,306.	United States Tire Co., New York City.
(16).	52,329.	The Fisk Rubber Co., Chicopee Falls, Mass.

Cut No.	Patent No.	Patentee or Assignee and Address
(17).	52,430.	Ajax Rubber Co., Inc., Milbrook, N. Y.
(18).	52,431.	Ajax Rubber Co., Inc., Milbrook, N. Y.
(19).	52,459.	H. A. Phillips & J. G. Stamm, Cleveland, Ohio.
(20).	52,573.	H. H. Hewitt, Buffalo, N. Y.
(21).	52,650.	The Goodyear Tire & Rubber Co., Akron, Ohio.
(22).	52,686.	The Star Rubber Co., Akron, Ohio.
(23).	52,701.	The Goodyear Tire & Rubber Co., Akron, Ohio.
(24).	52,702.	A. Kanzee, Berkeley, Calif.
(25).	52,703.	A. Kanzee, Berkeley, Calif.
(26).	52,704.	A. Kanzee, Berkeley, Calif.
(27).	52,893.	The Brunswick-Balke-Collender Co., Chicago, Ill.
(28).	52,899.	The McGraw Tire & Rubber Co., East Palestine, Ohio.
(29).	52,959.	W. A. Miller, Columbus, Ohio.
(30).	52,962.	A. L. Pashek, Newark, N. J.
(31).	52,975.	United States Tire Co., New York City

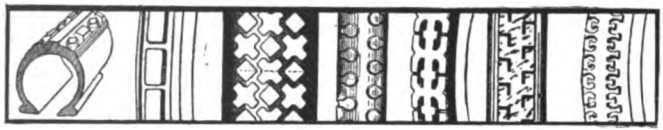

1. 2. 3. 4. 5. 6. 7.

8. 9. 10. 11. 12.

13. 14. 15. 16. 17. 18. 19.

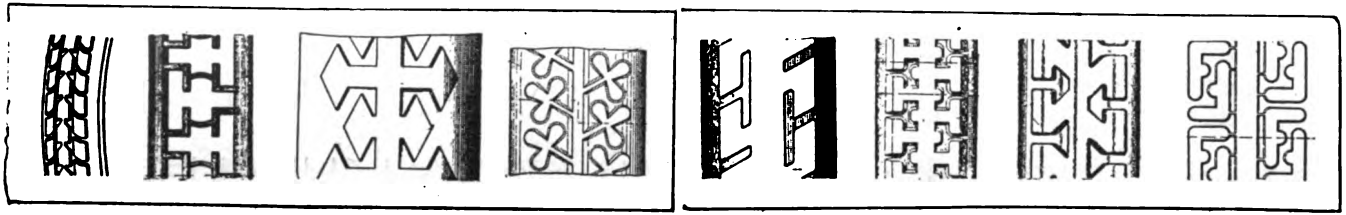

20. 21. 22. 23. 24. 25. 26. 27.

Cut No.	Patent No.	Patentee or Assignee and Address
(1).	53,223.	E. Hopkinson, New York City.
(2).	53,278.	Washington Rubber Co., Washington, Pa.
(3).	53,279.	Firestone Tire & Rubber Co., Akron, Ohio.
(4).	53,292.	E. H. Cooper, Kansas City, Mo.
(5).	53,316.	The General Tire & Rubber Co., Akron, Ohio.
(6).	53,331.	The Gates Rubber Co., Denver, Colo.
(7).	53,372.	Iowa Cord Tire Co., Des Moines, Ia.
(8).	53,494.	Hood Rubber Co., Watertown, Mass.
(9).	53,658.	W. B. Buckley, Washington, D. C.
(10).	53,511.	A. L. Weeks, Gadsden, Ala.
(11).	53,555.	C. R. Baker, Akron, Ohio.
(12).	53,558.	G. S. Anderson, Akron, Ohio.
(13).	53,410.	Revere Rubber Co., Providence, R. I.
(14).	53,497.	The B. F. Goodrich Co., New York City.
(15).	53,479.	Racine Auto Tire Co., Racine, Wis.
(16).	53,498.	M. Greenspan, Chicago, Ill.
(17).	53,589.	B. W. Hartley, Holleybury, Ont.
(18).	53,608.	S. Reele, Houston, Texas.
(19).	53,661.	The Oldfield Tire Co., Cleveland, Ohio.
(20).	53,973.	Benjamin H. Pratt, Milwaukee, Wisconsin.
(21).	53,949.	The Standard Tire Co., Willoughby, Ohio.
(22).	53,971.	Arthur E. Pearce, Ashtabula, Ohio.
(23).	53,940.	Harry J. Smith, Binghamton, N. Y.
(24).	53,894.	Walter R. Denman, Cleveland, Ohio.
(25).	53,899.	The Erie Tire & Rubber Co., Cleveland, Ohio.
(26).	52,931.	Frederick A. Oberheu, Detroit, Michigan.
(27).	52,964.	The Williams Foundry & Machine Co., Akron, Ohio.

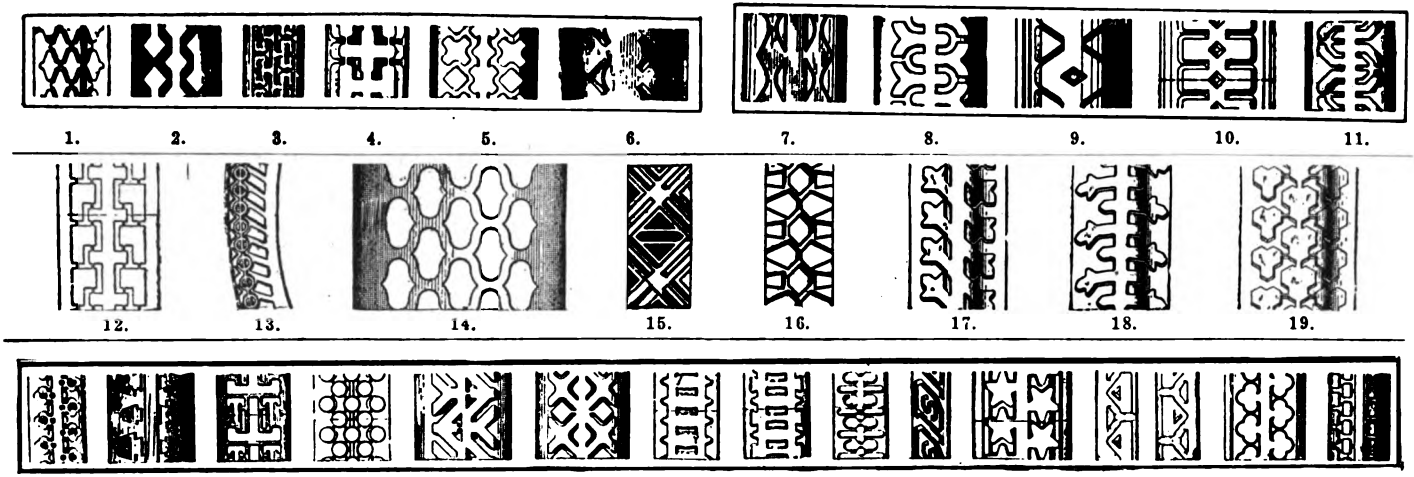

Cut No.	Patent No.	Patentee or Assignee and Address
(1).	54,720.	The Knox Tire & Rubber Co., Mt. Vernon, Ohio.
(2).	54,725.	J. Christy, Cleveland, Ohio.
(3).	54,740.	The Quality Tire & Rubber Co., Anderson, Ind.
(4).	54,758.	L. B. Lyman, Tallmadge, Ohio.
(5).	54,797.	M. L. Wiener, Akron, Ohio.
(6).	54,844.	Kelly-Springfield Tire Co., New York City.
(7).	53,709.	The Bowling Green Rubber Co., Toledo, Ohio.
(8).	53,727.	Richard J. Birch, Cleveland, Ohio.
(9).	53,749.	Ajax Rubber Co., Inc., Millbrook, N. Y.
(10).	53,750.	Ajax Rubber Co., Inc., Millbrook, N. Y.
(11).	53,672.	Richard J. Birch, Cleveland, Ohio.
(12).	53,858.	Arthur E. Pearce, Ashtabula, Ohio.
(13).	53,855.	Premier Tire & Rubber Co., Kansas City, Missouri.
(14).	53,845.	Walter R. Denman, Cleveland, Ohio.
(15).	53,692.	Thermoid Rubber Co., Trenton, New Jersey.
(16).	53,693.	Thermoid Rubber Co., Trenton, New Jersey.
(17).	53,675.	Isaac R. Davies, Lakewood, Ohio.
(18).	53,676.	Isaac R. Davies, Lakewood, Ohio.
(19).	53,677.	Isaac R. Davies, Lakewood, Ohio.
(20).	54,068.	The Portage Rubber Co., Barberton, Ohio.
(21).	54,070.	F. S. Dickinson, New York City.
(22).	54,090.	G. F. Hoffman, Akron, Ohio.
(23).	54,114.	C. L. Moody and T. Midgely, Springfield, Massachusetts.
(24).	54,120.	The Yale Tire & Rubber Co., New Haven, Connecticut.
(25).	54,121.	The Yale Tire & Rubber Co., New Haven, Connecticut.
(26).	54,122.	The B. F. Goodrich Co., New York City.
(27).	54,123.	The B. F. Goodrich Co., New York City.
(28).	54,124.	The B. F. Goodrich Co., New York City.
(29).	54,143.	H. F. Stansbury and J. F. Davis, Scranton, Penna.
(30).	54,153.	The Star Rubber Co., Akron, Ohio.
(31).	54,185.	The Victor Rubber Co., Springfield, Ohio.
(32).	54,186.	R. H. Syfers, Indianapolis, Indiana.
(33).	54,193.	The Black Hawk Tire & Rubber Co., Des Moines, Iowa.

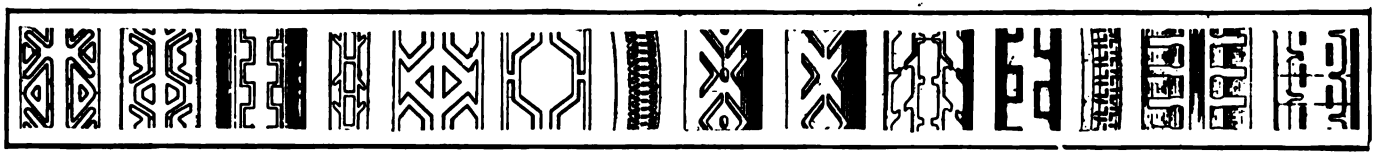

1 2. 3. 4. 5. 6. 7. 8. 9. 10. 11. 12. 13. 14.

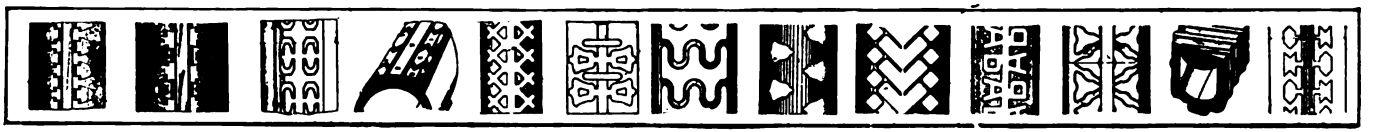

15. 16. 17. 18. 19. 20. 21. 22. 23. 24. 25. 26. 27.

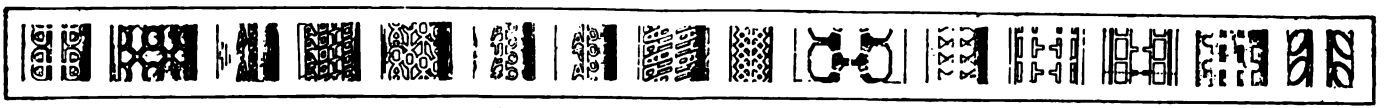

28. 29. 30. 31. 32. 33. 34. 35. 36. 37. 38. 39. 40. 41. 42.

Cut No.	Patent No.	Patentee or Assignee and Address
(1).	54,236.	The Madison Tire & Rubber Co., Inc., Buffalo, N. Y.
(2).	54,237.	The Madison Tire & Rubber Co., Inc., Buffalo, N. Y.
(3).	54,255.	C. C. Gates, Denver, Colorado.
(4).	54,262.	The Fisk Rubber Co., Chicopee Falls, Massachusetts.
(5).	54,263.	The Fisk Rubber Co., Chicopee Falls, Massachusetts.
(6).	54,264.	The Fisk Rubber Co., Chicopee Falls, Massachusetts.
(7).	54,276.	The Gordon Tire & Rubber Co., Canton, Ohio.
(8).	54,286.	The Savage Tire Co., San Diego, California.
(9).	54,287.	The Savage Tire Co., San Diego, California.
(10).	54,291.	J. Tenney, Jr., Plainfield, N. J.
(11).	54,321.	H. L. Kenyon, Satauket, N. Y.
(12).	54,324.	The Brunswick-Balke-Collender Co., Chicago, Illinois.
(13).	54,337.	F. W. Smith, Rutherford, N. J.
(14).	54,347.	The Cord Tire Corp, Chester, West Virginia.
(15).	54,246.	F. S. Dickinson, New York City.
(16).	54,247.	F. S. Dickinson, New York City.
(17).	54,248.	E. N. Downes, Charlotte, North Carolina.
(18).	54,261.	E. Hopkinson, New York City.
(19).	54,278.	Empire Rubber & Tire Co., Trenton, New Jersey.
(20).	54,281.	F. C. Plouf, Minneapolis, Minnesota.
(21).	54,290.	Gillette Rubber Co., Eau Claire, Wisconsin.

Cut No.	Patent No.	Patentee or Assignee and Address
(22).	54,306.	Liberty Tire & Rubber Co., Green Bay, Wisconsin.
(23).	54,318.	Proehl Tire & Rubber Co., Chicago, Illinois.
(24).	54,329.	G. Nowick, Kansas City, Mo.
(25).	54,330.	W. C. Owen, Cleveland, Ohio.
(26).	54,345.	T. Zeger, Sharpsburg, Pennsylvania.
(27).	54,348.	H. G. Egbert, Dayton, Ohio.
(28).	54,373.	W. P. Braender, Passaic, New Jersey.
(29).	54,412.	The Cleveland Rubber Corp. Co., Cleveland, Ohio.
(30).	54,521.	E. O. Blekre, Sioux City, Iowa.
(31).	54,522.	E. O. Blekre, Sioux City, Iowa.
(32).	54,523.	E. O. Blekre, Sioux City, Iowa.
(33).	54,580.	E. O. Blekre, Sioux City, Iowa.
(34).	54,581.	E. O. Blekre, Sioux City, Iowa.
(35).	54,582.	E. O. Blekre, Sioux City, Iowa.
(36).	54,560.	T. R. Palmer, Erie, Pennsylvania.
(37).	54,570.	O. H. Williams, Columbus, Ohio.
(38).	54,592.	W. B. Buckley, Washington, D. C.
(39).	54,624.	Zonta Tire & Rubber Co., Sioux City, Iowa.
(40).	54,625.	Zonta Tire & Rubber Co., Sioux City, Iowa.
(41).	54,647.	The McLean Tire & Rubber Co., East Liverpool, Ohio.
(42).	54,694.	F. W. Smith, Rutherford, New Jersey.

1. 2. 3. 4. 5. 6. 7. 8. 9. 10. 11. 12. 13. 14. 15.

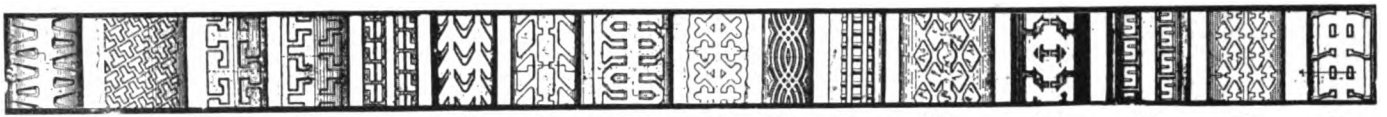

16. 17. 18. 19. 20. 21. 22. 23. 24. 25. 26. 27. 28. 29. 30. 31.

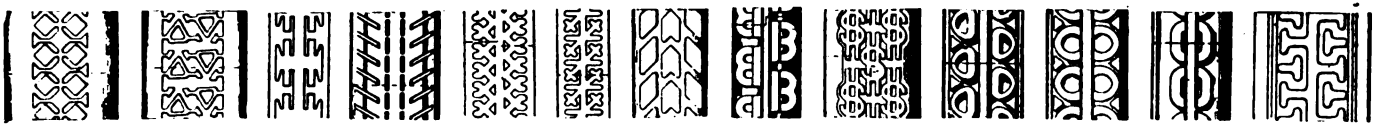

32. 33. 34. 35. 36. 37. 38. 39. 40. 41. 42. 43. 44.

Cut No.	Patent No.	Patentee or Assignee and Address
(1).	54,408.	C. C. Gates, Denver, Colorado.
(2).	54,434.	J. Martin, New York City.
(3).	54,496.	The Portage Rubber Co., Barberton, Ohio.
(4).	54,534.	J. W. Denmead, Akron, Ohio.
(5).	54,536.	C. E. Eckrode, Newark, New Jersey.
(6).	54,551.	H. Ives, Chippewa Falls, Wisconsin.
(7).	54,555.	Empire Rubber & Tire Corp., Trenton, New Jersey.
(8).	54,556.	Empire Rubber & Tire Corp., Trenton, New Jersey.
(9).	54,576.	Sterling Tire Corp., Rutherford, New Jersey.
(10).	54,583.	E. O. Blekre, Sioux City, Iowa.
(11).	54,598.	The Portage Rubber Co., Barberton, Ohio.
(12).	54,599.	W. H. Clarke, Elvria, Ohio.
(13).	54,608.	F. S. Dickinson, New York City.
(14).	54,691.	F. A. Seebach, Akron, Ohio.
(15).	54,698.	The Rotary Tire & Rubber Co., Zanesville, Ohio.
(16).	54,912.	Ten Broeck Tyre Co., Louisville, Kentucky.
(17).	54,919.	G. P. Hoffman, Akron, Ohio.
(18).	54,920.	G. P. Hoffman, Akron, Ohio.
(19).	54,921.	G. P. Hoffman, Akron, Ohio.
(20).	54,955.	Parker Tire & Rubber Co., Indianapolis, Ind.
(21).	55,057.	Fort Wayne Tire & Rubber Mfg. Co., Fort Wayne, Indiana.
(22).	55,100.	J. Tenney, Jr., Plainfield, New Jersey.
(23).	55,094.	H. J. Smith, Binghampton, New York.
(24).	54,975.	C. J. Venn, Chicago, Illinois.
(25).	55,026.	W. H. Clarke, Elvria, Ohio.
(26).	55,048.	I. V. Humphrey, Highland Park, Pennsylvania.
(27).	55,059.	Wear-Well Tire Co., Mahonington, Pennsylvania.
(28).	55,080.	E. A. Reid, Somerset, New Jersey.
(29).	55,087.	A. B. Schleicher, Pasadena, California.
(30).	55,101.	E. H. Trump, Barberton, Ohio.
(31).	55,091.	F. E. Shannon, Akron, Ohio.
(32).	55,118.	W. E. Duersten, New Castle, Pennsylvania.
(33).	55,119.	W. E. Duersten, New Castle, Pennsylvania.
(34).	55,141.	The Rotary Tire & Rubber Co., Zanesville, Ohio.
(35).	55,144.	The Overland Tire & Rubber Co., Omaha, Nebraska.
(36).	55,146.	The Ashland Tire & Rubber Co., Ashland, Ohio.
(37).	55,147.	The Ashland Tire & Rubber Co., Ashland, Ohio.
(38).	55,216	Howe Rubber Corporation, a Delaware Corporation.
(39).	55,236.	G. E. Bennie, Nashville, Tenn.
(40).	55,287.	E. L. Lawlor, Youngstown, Ohio.
(41).	55,313.	W. C. Owen, Cleveland, Ohio.
(42).	55,314.	W. C. Owen, Cleveland, Ohio.
(43).	55,315.	W. C. Owen, Cleveland, Ohio.
(44).	55,332.	G. N. Schell, Cleveland, Ohio.

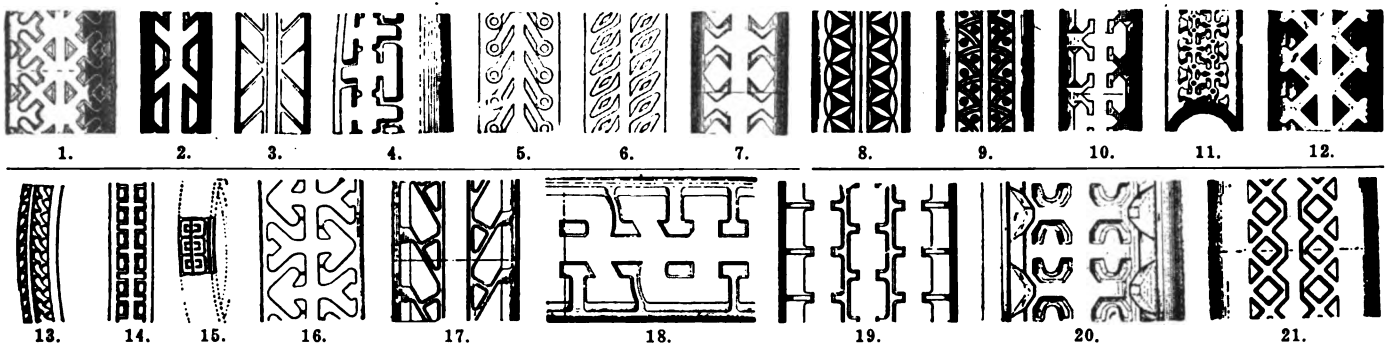

Cut No.	Patent No.	Patentee or Assignee and Address
(1).	55,122.	Standard Four Tire Co., Keokuk, Iowa.
(2).	55,133.	Ajax Rubber Co., Inc., New York City.
(3).	55,140.	Empire Tire & Rubber Corp., Trenton, N. J.
(4).	55,142.	Standard Tire Co., Willoughby, Ohio.
(5).	55,239.	The Ashland Tire & Rubber Co., Cleveland, Ohio.
(6).	55,240.	The Ashland Tire & Rubber Co., Cleveland, Ohio.
(7).	55,190.	Fidelity Tire & Rubber Co., Massillon, Ohio.
(8).	55,301.	J. J. Novak, Omaha, Nebraska.
(9).	55,302.	J. J. Novak, Omaha, Nebraska.
(10).	55,264.	The Ashland Tire & Rubber Co., Ashland, Ohio.
(11).	55,378.	H. E. Grooms, Columbus, Georgia.
(12).	55,171.	J. L. Hanley, Chicago, Illinois.
(13).	55,414.	D. F. Grow, Omaha, Nebraska.
(14).	55,490.	H. T. Gauss, Chicago, Illinois.
(15).	55,495.	W. Kline, Mogadore, Ohio.
(16).	55,411.	World Tire Corporation, Chicago, Illinois.
(17).	55,416.	J. W. Denmead, Akron, Ohio.
(18).	55,437.	F. E. Shannon, Akron, Ohio.
(19).	55,459.	Standard Four Tire Co., Keokuk, Iowa.
(20).	55,506.	J. & D. Tire Co., Charlotte, North Carolina.
(21).	55,506.	W. F. Duersten, New Castle, Pennsylvania.
(22).	55,966.	The B. F. Goodrich Co., New York City.
(23).	55,987.	W. E. Duersten, New Castle, Pennsylvania.
(24).	56,046.	The Wildman Rubber Co., Detroit, Michigan.
(25).	56,103.	U. S. Compression Inner Tube Co., Tulsa, Oklahoma.
(26).	56,104.	U. S. Compression Inner Tube Co., Tulsa, Oklahoma.
(27).	56,105.	U. S. Compression Inner Tube Co., Tulsa, Oklahoma.
(28).	56,271.	E. O. Blekre, Sioux City, Iowa.
(29).	56,118.	W. H. Milliken, Cleveland, Ohio.
(30).	56,158.	The Charles William Stores, Inc., Brooklyn, New York.
(31).	56,243.	H. H. Swan, Grand Rapids, Michigan.
(32).	56,282.	General Tire & Rubber Company, Akron, Ohio.
(33).	56,307.	The B. F. Goodrich Co., New York City.
(34).	56,300.	The McLean Tire & Rubber Co., Cleveland, Ohio.

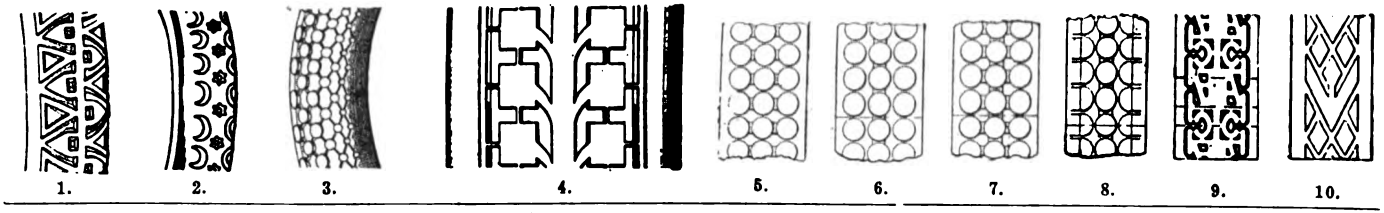

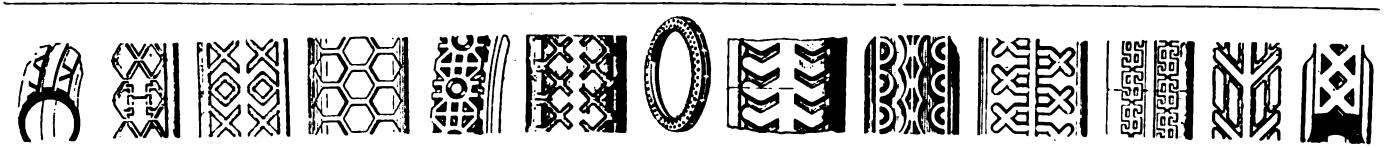

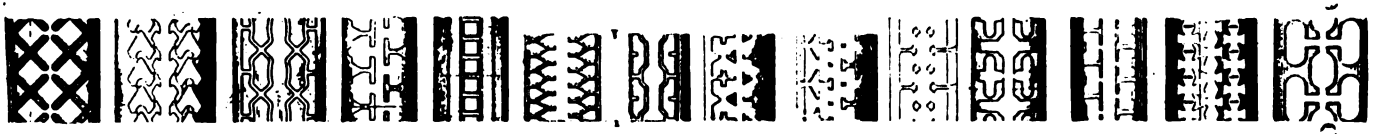

Cut No.	Patent No.	Patentee or Assignee and Address
(1).	56,750.	Gordon Tire & Rubber Co., Canton, Ohio.
(2).	56,723.	A. Heskett, Oakland, California.
(3).	56,766.	H. S. Rector, Chicago, Illinois.
(4).	56,784.	E. O. Blekre, Sioux City, Iowa
(5).	57,122.	H. A. Githens, Milwaukee, Wisconsin.
(6)	57,123.	H. A. Githens, Milwaukee, Wisconsin.
(7).	57,124.	H. A. Githens, Milwaukee, Wisconsin.
(8).	57,125.	H. A. Githens, Milwaukee, Wisconsin.
(9).	57,079.	American Tire Corporation, Cleveland, Ohio.
(10).	57,116.	Fisk Rubber Co., Chicopee Falls, Massachusetts.
(11).	57,065.	Trautwein Corporation, Brooklyn, New York.
(12).	57,059.	Hood Rubber Co., Watertown, Massachusetts.
(13).	57,118.	W. E. Duersten, New Castle, Pennsylvania.
(14).	57,071.	M. J. Atkinson, Mimico, Ontario, Canada.
(15).	57,040.	E. C. Gordon, New York.
(16).	57,131.	Portage Rubber Co., Barberton, Ohio.
(17).	57,136.	H. M. Lambert, Portland, Oregon.
(18).	57,120.	Corona Cord Tire Co., E. Butler, Pennsylvania.
(19).	57,073.	Allen Tire & Rubber Co., Allentown, Pennsylvania.
(20).	57,072.	Rubber Products Co., Barberton, Ohio.
(21).	57,138.	E. L. Lawlor, Youngstown, Ohio.
(22).	57,077.	Williams Foundry & Machine Co., Akron, Ohio.
(23).	57,070.	E. P. Altenburg, Columbiana, Ohio.
(24).	57,135.	Portage Rubber Co., Barberton, Ohio.
(25).	57,290.	Oldfield Tire Co., Cleveland, Ohio.
(26).	57,336.	Cleveland Rubber Corporation, Cleveland, Ohio.
(27).	57,134.	Tuscora Rubber Co., New Philadelphia, Pennsylvania.
(28).	57,295.	Addison A. Arter, Omaha, Nebraska.
(29).	57,376.	J. H. Patten, Seattle, Washington.
(30).	57,408.	Star Rubber Co., Akron, Ohio.
(31).	57,207.	Knox Tire & Rubber Co., Mount Vernon, Ohio.
(32).	57,208.	Knox Tire & Rubber Co., Mount Vernon, Ohio.
(33).	57,340.	Archer Tire & Rubber Co., Minneapolis, Minnesota.
(34).	57,210.	Tuscora Rubber Co., New Philadelphia, Pennsylvania.
(35).	57,211.	Tuscora Rubber Co., New Philadelphia, Pennsylvania.
(36).	57,332.	L. A. Gredys, Akron, Ohio.
(37).	57,297.	Herbert T. Auerbach, Buffalo, New York.

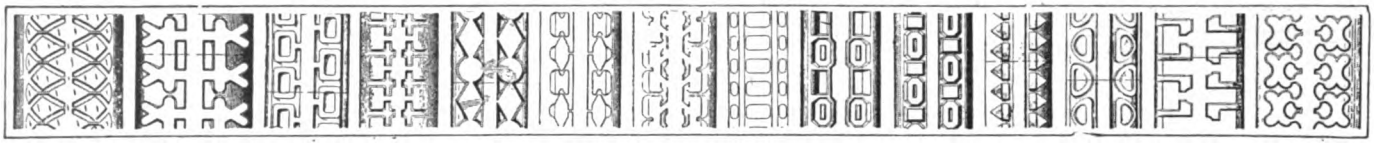

1. 2. 3. 4. 5. 6. 7. 8. 9. 10. 11. 12. 13. 14.

15. 16. 17. 18. 19. 20. 21. 22. 23. 24.

25. 26. 27. 28. 29. 30. 31. 32. 33. 34. 35. 36.

Cut No.	Patent No.	Patentee or Assignee and Address
(1).	55,585.	G. E. Batcheller, Forest Hills, New York.
(2).	55,586.	R. D. Belden, Marion, Ohio.
(3).	55,588.	W. O. Bruess, Port Clinton, Ohio.
(4).	55,600.	T. Follen, LaFayette, Indiana.
(5).	55,606.	Bowling Green Rubber Co., Toledo, Ohio.
(6).	55,611.	Henderson Tire & Rubber Corp., Columbus, Ohio.
(7).	55,612.	Henderson Tire & Rubber Corp., Columbus, Ohio.
(8).	55,630.	R. P. McElrath, Lakewood, Ohio.
(9).	55,728.	W. C. Owen, Cleveland, Ohio.
(10).	55,729.	W. C. Owen, Cleveland, Ohio.
(11).	55,808.	Armorcord Rubber Co., Morgantown, W. Va.
(12).	55,813.	W. C. Owen, Cleveland, Ohio.
(13).	55,832.	Biltwell Tire & Rubber Co., Barberton, Ohio.
(14).	55,842.	Wilson Rubber Co., Des Moines, Iowa.
(15).	56,122.	Charles Williams Stores, Inc., Brooklyn, N. Y.
(16).	56,217.	Chillicothe Tire & Rubber Co., Chillicothe, Ohio.
(17).	56,265.	E. O. Blekre, Sioux City, Iowa.
(18).	56,266.	E. O. Blekre, Sioux City, Iowa.

Cut No.	Patent No.	Patentee or Assignee and Address
(19).	56,267.	E. O. Blekre, Sioux City, Iowa.
(20).	56,268.	E. O. Blekre, Sioux City, Iowa.
(21).	56,269.	E. O. Blekre, Sioux City, Iowa.
(22).	56,270.	E. O. Blekre, Sioux City, Iowa.
(23).	56,260.	J. M. Alderfer, Akron, Ohio.
(24).	56,299.	McLean Tire & Rubber Co., Cleveland, Ohio.
(25).	56,908.	E. O. Blekre, Sioux City, Iowa.
(26).	56,909.	E. O. Blekre, Sioux City, Iowa.
(27).	56,910.	E. O. Blekre, Sioux City, Iowa.
(28).	56,911.	D. F. Crow, Omaha, Neb.
(29).	56,918.	R. B. Gillette and R. W. Hutchins, Eau Claire, Wis.
(30).	56,921.	Syracuse Rubber Co., Syracuse, N. Y.
(31).	56,934.	D. W. Whipple, New York City.
(32).	56,974.	H. L. Kenyon, Setauket, New York.
(33).	56,975.	H. L. Kenyon, Setauket, New York.
(34).	56,976.	H. L. Kenyon, Setauket, New York.
(35).	56,980.	E. L. Lawlor, Youngstown, Ohio.
(36).	56,981.	E. L. Lawlor, Youngstown, Ohio.

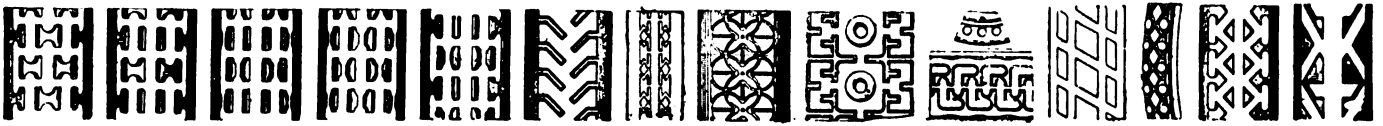

1. 2. 3. 4. 5. 6. 7. 8. 9. 10. 11. 12. 13. 14.

15. 16. 17. 18. 19. 20. 21. 22. 23. 24. 25. 26.

27. 28. 29. 30. 31. 32. 33. 34. 35. 36.

Cut No.	Patent No.	Patentee or Assignee and Address
(1).	57,257.	Republic Rubber Corporation, Youngstown, Ohio.
(2).	57,258.	Republic Rubber Corporation, Youngstown, Ohio.
(3).	57,259.	Republic Rubber Corporation, Youngstown, Ohio.
(4).	57,260.	Republic Rubber Corporation, Youngstown, Ohio.
(5).	57,261.	Republic Rubber Corporation, Youngstown, Ohio.
(6).	57,265.	New Castle Rubber Co., New Castle, Pennsylvania.
(7).	57,307.	Master Tire & Rubber Co., Dayton, Ohio.
(8).	57,308.	D. L. Becker, Oakland, California.
(9).	57,350.	L. M. Kennedy, Fulton, Illinois.
(10).	57,363.	H. M. Lambert, Portland, Oregon.
(11).	57,377.	Dunlop Rubber Co., Limited, London, England.
(12.)	57,386.	N. Serlin, Chicago, Illinois.
(13).	57,224.	Sears, Roebuck & Co., Chicago, Ill.
(14).	57,400.	Kelley Tire & Rubber Co., New Haven, Conn.
(15).	57,480.	Miller Rubber Co., Akron, Ohio.
(16).	57,667.	J. P. Kirch, Pittsburgh, Pennsylvania.
(17).	57,666.	J. P. Kirch, Pittsburgh, Pennsylvania.
(18).	57,637.	Fisk Rubber Co., Chicopee Falls, Massachusetts.
(19).	57,664.	J. P. Kirch, Pittsburgh, Pennsylvania.
(20).	57,663.	J. P. Kirch, Pittsburgh, Pennsylvania.
(21).	57,566.	J. M. Alderfer, Akron, Ohio.
(22).	57,665.	J. P. Kirch, Pittsburgh, Pennsylvania.
(23).	27,668.	J. P. Kirch, Pittsburgh, Pennsylvania.
(24).	57,669.	J. P. Kirch, Pittsburgh, Pennsylvania.
(25).	57,670.	J. P. Kirch, Pittsburgh, Pennsylvania.
(26).	57,671.	J. P. Kirch, Pittsburgh, Pennsylvania.
(27).	57,731.	E. Yockey, Milwaukee, Wisconsin.
(28).	57,491.	R. D. Belden, Marion, Ohio.
(29).	57,490.	R. D. Belden, Marion, Ohio.
(30).	57,431.	M. Greenspan, Chicago, Ill.
(31).	57,732.	F. E. Shannon, Akron, Ohio.
(32).	57,745.	A. C. Terrell, Kansas City, Mo.
(33).	57,631.	Hood Rubber Co., Watertown, Massachusetts.
(34).	57,709.	Ideal Tire & Rubber Co., Cleveland, Ohio.
(35).	57,461.	Madison Tire & Rubber Co., Inc., Buffalo, N. Y.
(36).	57,758.	E. Yockey, Milwaukee, Wisconsin.

It has also been found that the rubber-knobbed tread is less subject to puncture than smooth-tread tires, as the flexible rubber of the knobs will throw off 90 per cent. of the nails and other objects which in nine cases out of ten would puncture an ordinary tire. This has been proved many times in many ways.

Rubber Tire Protection

A motor tire is exposed to other accidents than skidding. Being rather expensive, the road wear and the possibilities of blow-outs, cuts, punctures, side-cracks, bead tearing, sand-boils, and other contingencies must be reckoned with, as well as tire slipping. Many anti-skid treads are claimed to prevent several or all of these troubles and for that reason they appeal strongly to many. Then, too, skidding is not a constant danger, and there is a demand for detachable treads, which can be used or not, as occasion requires.

Abrasion against the road surface is the primary cause of rubber tire deterioration; subsequent unfavorable conditions and circumstances—inadequate inflation and consequent rim cutting, punctures or cuts, bruises, sand or water blisters, etc.,—which complete their destruction, are in most cases only contributory factors, for which hard wear and consequent reduction of rubber substance, has prepared the way.

Under these circumstances it is only to be expected that the efforts of inventors to perfect some device whereby, without impairment of its resiliency, a tire would be guarded against this destructive wear, should be watched with interest by automobilists, especially where it is found practicable to combine, with such protection, anti-skidding properties.

The means thus far employed for this purpose have varied widely in character and include the hardening, by compounding with different substances and otherwise, of the rubber surface and the distribution over it of studs, corrugations, etc., of harder rubber, the complete covering of the surface exposed to wear with a supplementary leather "shoe" or strip, specially tanned and treated to increase resistance to wear and the effects of moisture, and in some instances vulcanized to a rubber friction fabric or directly to the body of the tire and made either plain or studded with metal bosses. A similar device is made with a rubber, in place of the leather foundation, and some inventors even encase the tread of the tire in an armor of more or less elastic, overlapping plates, closely resembling the "plate mail" worn by knights of old.

Detachable Anti-Skids

As far as their original purpose is concerned, i. e., the protection of the tire against excessive wear or external injury, some of these devices serve their purpose admirably, and have certain anti-skid advan-

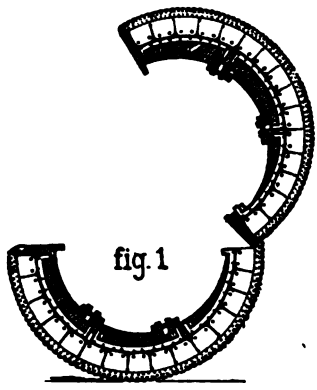

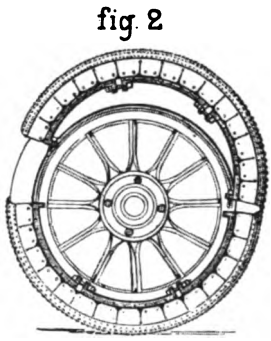

De Fonier Tread—French

tages, but almost all those of a removable character are open to objection for one or all of several reasons.

Detachable anti-skids at first had a much greater vogue in Europe than in the United States. The reason probably is that in Europe

L'Empereur Tread—French

Billet-Couverchel Tread—French

the skidding season can be calculated with some certainty, and during the rest of the year motorists prefer to run on bare tires. Some of these removable treads are neatly made, though in England and Germany, where skidding is frequent, appearance counts for much less

than in America and France, where skidding is less usual. Detachables are always more or less cumbersome, and they sacrifice a good deal of resilience. There is undoubtedly some tendency to chafe and creep, with consequent generation of frictional heat which is particularly injurious if moisture be present, but the injury from this source is largely overdrawn. They are liable to allow grit and sand to find its way between protector and tire, which, with the almost inevitable friction, be it ever so slight, is disastrous to the rubber surface, or, and this is equally objectionable, they admit water between casing and covering, which, in its effect on the rubber tire, is almost if not quite as bad. Most detachables are held on by straps, cables, hooks under the rim, or some other fastening, but there are several which depend wholly upon inflation to keep their place. Some of the

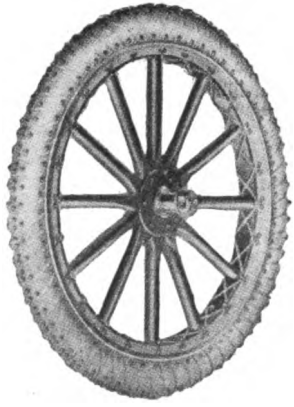

GENARD TREAD—FRENCH

DURAND TREAD—FRENCH

latter have been known to come off while running. Since their hold upon the tire depends upon circumferential tension, they necessarily stretch more or less—about one-half inch to 100 miles run, according to some authorities.

The Mullikin overshoe tire is a protector without studs or other anti-skid feature that is held in place by inflation of the tire and is intended solely to prolong tire wear. It is removable, interchangeable and can be used on all makes of tires. The overshoe is made in a separate piece and its inner face opposite the casing is provided with longitudinal and transverse projections and recesses to correspond to those in the tire. This feature insures against creeping, either longitudinally or transversely. There are also a number of suction cups

in the inner face of the overshoe, in the thickened side portions, which hold the sides firmly in position on the casing. The tread portion is made of durable rubber and the overshoe is not vulcanized to the casing. The casing, protected by the overshoe, does not come in contact with the ground and is not exposed, therefore wearing indefinitely.

The Day sectional casing is a detachable rubber anti-skid easily applied to new or old tires. It consists of separate sections or pads of rubber and fabric vulcanized under hydraulic pressure. As many of these sections as are required to cover the outer circumference of the tire are placed across the tread with the ends pressed down against

DAY SECTIONAL CASING

the sides of the casing where they are held securely by steel rings gripping the ends of the sections. Worn sections can be replaced by new ones as needed.

For steady running detachables are hardly as cheap as the cured on type, and probably cost about as much in the end as running on bare tires, leaving out the puncture question. Thus it hardly pays tc use leather covers on rubber tires, except for the anti-skid feature. However, the defects pointed out are being remedied, to some extent. Tire makers are giving more attention to the theory of tire service, and have learned a good deal. For example, it was long believed that the heat which destroyed tires arose from road friction, and the Pullman band, an English tread, was advertised as having a layer of asbestos under it to keep the heat from getting inside. Nowadays everybody is trying to get the heat out.

Thus, while in many respects, the separate tire protector has its good points, it cannot be regarded as perfect, and motorists are still

looking for some device that will protect this, the most expensive item in their equipment.

In the meantime, it cannot be denied, that in the case of most of the applied tire protectors, their weak point is to be sought, not in the protective medium itself, but in the means of securing it in place and it is to the improvement of this feature that the inventor must direct his ingenuity, if he wishes to obtain a satisfactory measure of success.

Studded Leather Treads

The second classification, which comprises all combinations of leather and metal has long been a fertile field for invention. Studded leather treads to safeguard against skidding as well as punctures, blow-

Cromwell Tire Protector

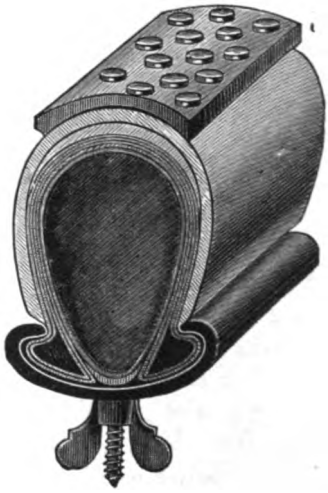

Clerget Tread—French

outs and rim cutting, and to prolong the service of badly worn tires, are of two sorts. There are the detachable overshoe tire protectors held in place in various ways, and the leather treads which are made an integral part of the tire.

It being generally agreed that an ordinary tire will not last as long when completely covered by leather as when running bare, the development has been in two different directions. In one case, the

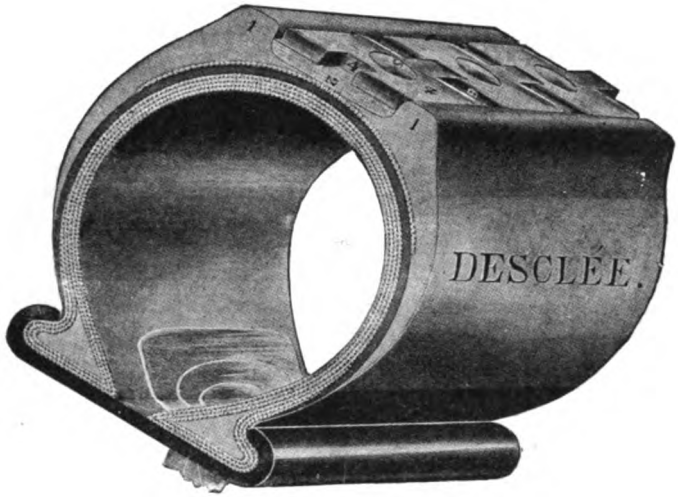

DESCLEE TREAD—FRENCH

OPTIMA TREAD—FRENCH

leather has been narrowed until it merely covers the tread of the tire, or in the case of the detachable, various ventilating devices are resorted to, so that the heat may get out easily through the walls. In the other case, the tire makers decided to leave the rubber covering off

TIRE PROTECTOR—AMERICAN

AHLBON TREAD—GERMAN

of the tire, substituting for it a complete leather cover, which is cemented directly to the canvas.

Other makers went a step further and put in another layer of leather instead of canvas. This last step is deplored by some, on the

LEATHER RIVET STUDDED TREAD

ground that leather will not allow the strain to be properly distributed, making the all-leather tire weaker, as a whole, than a cotton one. These persons rely upon the several layers of rubberized or frictioned

canvas for strength, and upon the leather cover for protection and to carry the studs or other slipless feature. The objection occasionally heard, that wetted leather becomes stiff on drying, no longer holds. By soaking in metallic salts, as in the use of chrome leather, or by forcing or frictioning rubber into the pores, as in the Australian rubberized leather, the material is made more or less resistant to water. The almost incredible toughness of leather is known to all, and its very high wearing power may be reinforced to any required extent by metal studs or plates.

Thus, upon such a study of leather as a function in anti-skid making, many have in past years based their prophecy that leather is the natural material from which to make tire shoes, as well as ordinary

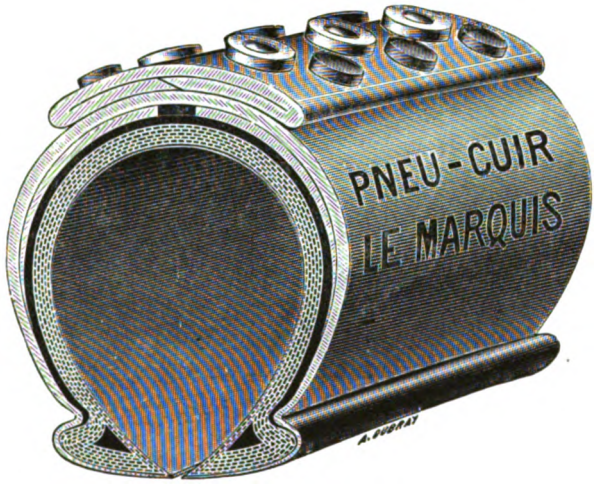

LE MARQUIS TREAD—FRENCH

foot shoes, and that all tires will ultimately be made of leather armed with hobnails. Present tendencies do not substantiate this prophesy, however.

Many leather and steel skids, as now made, simply cover the wearing portion of the rubber shoe, being cemented tightly upon it, leaving the tire walls bare. Others are riveted upon the leather cover in such wise that the edges jut out free over the tire, giving a flat tread. Even without studs, such a rolling strip or sole forms a valuable anti-skid feature, especially in mud, snow or loose gravel. The studs are especially designed for slippery flat surfaces. It may sometimes happen, however, that sharp gravel or little flints will get caught

under the projecting edges, where, under the regular compression of the tire, at that point, they will cut the shoe out badly. By beveling the under edge of the tread sole, this rather remote contengency is prevented. When such a flat sole is used on a tire, it is customary to run the leather cover well down over the walls, and generally over the bead as well. Some critics claim, however, that it is better not to have the leather run over the bead; because in severe side rolls the walls cannot stretch, with the result that the sole will be wrenched off or that the bead will be torn.

Of the many studded leather overshoe tire protectors the best known in America is probably the Woodworth detachable tread. It consists of two plies of chrome-tanned leather forming a lining and tread warranted not to crack, harden or rot under any condition, a

WOODWORTH TREAD

reinforcement strip of several plies of strong inelastic fabric being interlaid between the two plies of leather and all being fastened together by a large number of steel rivets, the outside heads of which serve as studs to increase the wear and to prevent skidding. The rivets are securely clinched on the inside, the ends being carefully turned back into the leather, leaving a smooth round surface in contact with the tire.

This leather shoe is held in place on the rubber tire by circular rings composed of coil springs running through hollow beads along both edges, the several spring sections on each edge being hooked together after the tread is put on the tire. The hooks are quickly and easily manipulated with the tool furnished with every tread. The tension springs draw the protector ever tighter as the leather stretches and prevents looseness, chafing and heating of the tire and the entrance of dirt.

The Woodworth double grip, a special snow and ice tread, differs in having in addition to the regular studs a staggered row of special rivets two inches apart. These rivets are tempered glass hard, and are deeply cupped, giving sharp edges even when worn. The light weight Woodworth tread is held on the tire by coil springs three inches long, placed about a foot apart along each edge and connected by strong inelastic fabric strips.

The Healy detachable tire grip is an overshoe tire protector which brings no metal whatever in contact with the rubber of the tire. In construction it is similar to chain grips, but is made throughout of tough chrome leather treated by a water-proofing process. The cross straps have steel rivets inserted in them to prevent skidding and give longer wear. The method of application is by means of the buckle fastening of the side straps.

The Maplebay tire cover is an overshoe made of waterproof leather which will not shrink or harden. The steel-studded tread, with slits along the sides to ensure a better fit, fastens neatly to the clincher rim of the wheel by means of flat metal hooks or clips serving to prevent a large percentage of punctures. Designed along

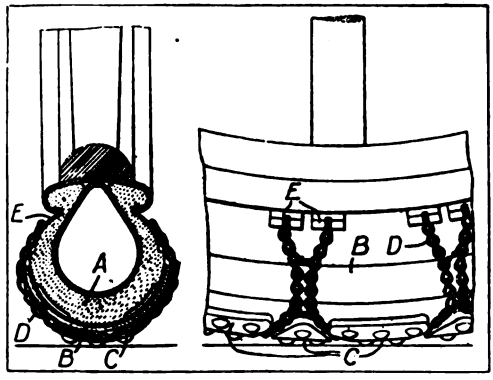

KAPPELER TIRE PROTECTOR

similar lines are the Walker tire band, the Artillery and Twentieth Century tire protectors, the Hercules tire cover and the Cort detachable non-skid, the latter a British device.

A French non-skid tire protector, known as the Kappeler, combines the studded leather tread with non-skid chains. The pneumatic tire *A* is protected by a separate tread band *B*, preferably of leather, the tread of which is formed with triangular non-skid portions *C*, ar-

ranged around the circumference with apices and bases oppositely placed and diagonal spaces between for accommodating the non-skid chains *B*. The chains are of the ordinary type, being joined in pairs by side links and anchored to the bead-rim by hooks *E*.

The Add-Wear detachable tread is made of thick, pliable, chrome leather unafected by water. Steel rivets add to its durability. The tread is secured to the tire by two rows of patent, double-clutch steel hooks which in turn are attached to an endless wire hoop along the side of the tire.

Similar to this is the Universal tire protector, its locking equipment consisting of a pair of steel tension bands made in two segments. Each segment is passed around a series of loop holes along the tread margin, the two band segments being connected by two band locks, attached permanently to each side of the tread. Each end of the band segments affords a point of lock adjustment at four points on each side of the tread. In this same class belongs the Wisconsin tire protector.

The Highway tire protector is composed of a series of sections so fastened together that any individual one may be removed if dam-

HIGHWAY TIRE PROTECTOR

aged. These sections are made of a light, water-proofed, specially treated vulcanized fabric reinforced with strips of belting across the tread and steel studs. These tire protectors, in addition to guarding against punctures, keep the car from skidding in sand and on muddy roads. They fit easily over the tire and do not wear it out, because a strip of leather is cushioned between the tire tread and the protector. The openings between the sections permit sand, mud, gravel, and water, to escape.

Another method of attaching overshoe tire protectors is exemplified by the Brictson tread. It has an outer layer of pliable chrome-tanned leather. Next to this are five plies of cotton tire fabric, while inside is another layer of leather. Through the outer leather and the five plies of cotton are driven steel studs and rivets clinched into the layer of leather which follows the tire fabric, and then there is another layer of leather which covers these clinched ends of the rivets and studs and prevents them from coming into contact with the rubber tire. The ends of the outer layer of chrome leather are skived thin where they are placed between the rubber tire and rim. This does away with any possibility of thick ends which might crumple up, and makes possible a snug fit of the Brictson tread over the rubber tire.

The Colorado tread is of similar construction, fitting snugly over the tire without hooks or other fastenings. It is built up of several layers of rubberized or frictioned fabric, with a tread portion consisting of chrome tanned leather carrying steel rivets. The entire tread fits tightly over the tire, without wrinkles, excluding water, sand, etc., and eliminating the possibility of creeping or chafing. Still another tread of this type is the Pacific.

In France anti-skid armored protective covers were gradually abandoned in favor of the Michelin tread, introduced in 1905, which was made an integral part of the tire. It is composed of a tread of chrome leather about one-sixth of an inch thick, tapered off at the edge, cemented to an under tread of rubber and fabric from one-tenth of one-eighth of an inch in thickness, and wider than the leather tread, likewise having tapered edges. Rivets pass through the two treads, the whole being cemented on the cover by a solution allowing of hot vulcanization. The chrome leather is a special quality, which will resist a temperature of 284 to 302 degrees F. Under the rivets there is placed a layer of very soft rubber, which prevents the heads of the rivets from injuring the fabric of the body and likewise increases the elasticity of the tire.

Some two years later the Pennsylvania anti-skid tire was brought out along lines very similar to the Michelin tread. The Englebert flat chevron non-skid, a Belgian tire, had a steel studded leather tread made part of the tire itself and presenting a flat surface to the road.

A French studded tread tire patented by Pauli and Benniger avoids the use of rubber so far as possible. The casing is built up in the usual way, of several plies of frictioned fabric. On this is fitted a protecting cover made of leather or similar material and provided with metal studs.

Referring to the cross section of the tire, *A* is the casing and *B* the leather protecting cover which is held in place by rivets *C*. The leather tread *D* is fastened to the protecting cover by stud rivets *E*, which extend through the fabric plies. The beads *F* are made of leather, or similar material, and applied to the casing in the usual manner.

Another French non-skid tire, the Pirot and Zimmerman, consists of two leather bands held together by rubber solutions and double-headed metal studs, the whole being cemented to the casing of a pneumatic tire, forming the tread. Referring to illustration *A*, 1 is the tire and 2 and 3 are the leather bands supporting the studs 4. The spaces between the bands and the tire are filled with rubber compound 5.

The studs or rivets are composed of three distinct parts as shown at *B*, the method of applying being shown at *C*. The lower band 2 is first placed on the axis of the rivet, then the ring 8 is put in place,

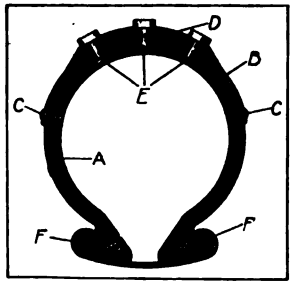

PAULI & BENNIGER TIRE

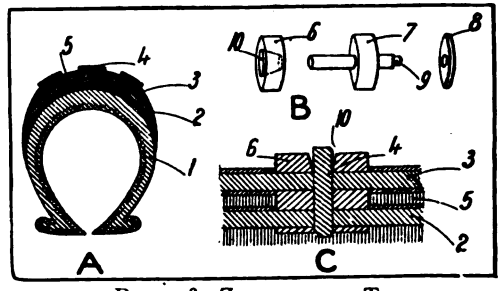

PIROT & ZIMMERMAN TIRE

and the extremity 9 is flattened to hold the rim 8 in place. The band 3 is next slipped on and the head 6 fitted on the upper end of the rivet. The spaces between the leather bands are then filled with rubber compound and the end of piece 4 is upset, filling the conical space 10 of the head 6.

STUDDED RUBBER TREADS

Owing to the difficulty of securing satisfactory adhesion between rubber and leather surfaces, and the lesser resiliency of leather as compared with rubber, the experiment of studding rubber and fabric tires with metal was tried by numerous manufacturers, beginning some fifteen years or more ago.

The third group of treads, however, depends chiefly upon the belief of many that leather covers or protectors really injure the tire. The theory is that leather covers greatly accentuate the effect of heat-

ing, quickly destroying both the canvas and the rubber. In high and prolonged speeding this would probably be the case, though at moderate speeds a leather cover undoubtedly prolongs the life and increases the mileage of a tire. All tires develop heat, when going at high speed, and a leather covering certainly retains it. Though the resulting heat could hardly be enough to over-vulcanize the rubber, it is barely possible that the heat and moisture may set up some destructive chemical reaction with one of the various compounding ingredients in the rubber. It is held by some authorities that sulphurite acid, for instance, may be produced in rubber by the simple action of moist air upon the free sulphur present. If this be true, the action would be much hastened by the heat developed in a covered tire running at high speed. As for the canvas, it would be hurt by the moisture, to some extent, though that is not enough to explain its rapid decomposition. Early tire makers, who used linen fabric, complained of injury to the linen during vulcanization, and cotton was found to be more resistent; but any acids that might be produced in the tire by high speeds would readily injure cotton canvas. The chafing of the shoe by the leather protector could hardly be enough to hurt anything.

The idea of vulcanizing studs or spikes into the rubber tread is now old, though some tire makers still longer ago tried screwing or riveting them through the shoe. They were found to chafe the tube, however, and it became necessary to embody them in the tire before curing. Even then there was some wearing action upon the surrounding rubber, since the studs were not in true contact with it. In the latest types, however, the studs are first copper plated or otherwise treated, so that through the effect of the sulphur of vulcanization the rubber forms a true union with the studs. Such a contact cannot be broken, and the studs or spikes wear down under road friction without showing any tendency to be driven through the shoe. It is also claimed that such an anti-skid feature, instead of shutting in the heat, as in the case of leather treads, actually helps to carry it away through the studs, much as the metal offsets on an air-cooled cylinder increase the radiating surface and conduct the heat from the cylinder. In this way, by taking up much of the wear and by carrying off the heat, baked-in studs are said to prolong the life of tires very considerably, without appreciably affecting resilience. Road suction may also be slightly relieved. As a rule such anti-skid treads are not puncture proof to any great degree, and no such claim is made for them. As a purely non slipping device, however, many feel that they have solved the problem

The Dunlop steel studded non-skid racing tire had studs not only imbedded in the tire itself, but securely held by countersunk washers placed behind a specially toughened fabric.

The Adams non-skid tread had rivets which, when not in use, were flush with the base of the tread. The tread itself, however, was of specially soft vulcanized rubber, which crowded out of the way and allowed the studs to grip the road and thus prevent slipping.

The Herz anti-skidding tire, made in Austria, had a tread of steel studs carefully imbedded in fabric and rubber.

The Diamond "Grip" tread, especially for racing purposes, had specially hardened rivets inserted through rubber and fabric under hydraulic pressure and secured by washers. Continental, Le Person and Cape Noire tires were similar.

The Midgley "wire grip" tread, a feature of the Hartford, Morgan & Wright and G. & J. tires of 1906 and 1907, had imbedded in its flat tread four parallel endless coils of helical spring. In the event of the outer loops wearing down, there would still remain a series of inverted staples fixed in the tread. This wearing away was looked for, the use of the spring being a convenient method of setting the staples in the tread. Their use saved the wear on the rubber in somewhat the same manner that nails in a boot save the sole and heel leather, as well as adding to the firmness of the footing.

HENLEY NON-SKID TIRE

It is a well-known fact that rubber non-skid treads hold better on dry than on wet pavements. It is equally true that steel-studded treads hold better on wet than on dry pavements. Therefore, the Henley non-skid tread with steel studs and V-shaped rubber projections, an English tire, should hold well in all conditions of weather.

SIRDAR TIRE

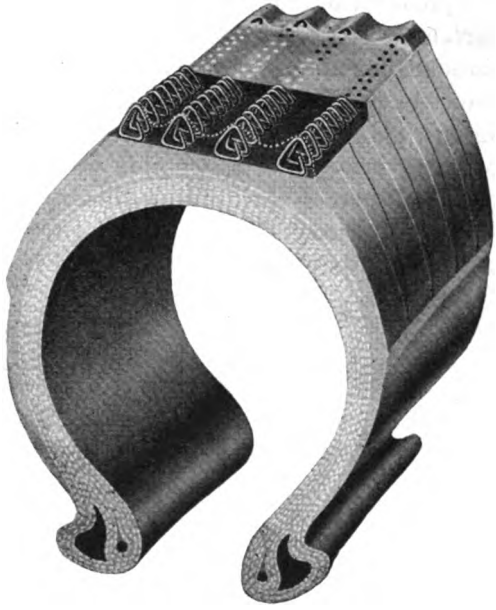

LANCASTER WIRE GRIP TIRE

This tire is built up on an extra stout casing, with a generous thickness of rubber on the walls and a non-skid tread composed of thick V-shaped blocks of solid rubber and toughened steel studs. The rubber blocks act as a protection to the steel studs, and also permit of the power being transmitted to the road without sudden spinning of the rear wheels and loss of studs.

The Russian Provodnik Columb tread was flat and steel studded with a section of tough black rubber at the wearing point.

An English steel studded rubber tire, the Sirdar, is said to prevent side slips on all kinds of roads. As shown in the illustration the tread of the tire is grooved and these grooves are provided with steel studs set into the rubber, their top surfaces being flush with the tread. This gives greater resilience than is often realized in the separate studded tire cover, also less inflation is required than for a tire with an additional protector, making it more comfortable to ride upon.

"A wire grip tire with a thousand claws" is the pointed statement that is intended to attract public attention to the non-skid puncture resisting qualities of the Lancaster tire.

The non-skid and the resistence-to-puncture effects of the Lancaster wire grip tire are obtained by four spiral coils of steel wire that

completely encircle the tire and are vulcanized in the tread, near the surface. After the tire has been used for a few miles, the wires wear through, forming thousands of steel points that grip the road. Moreover, the closely intermeshed wires shield the tread, thus protecting it against glass and tin. Reinforced by the wire coils and strengthened by extra heavy fabric, the side walls of the casing are claimed to be practically proof against blow-outs.

The "Pussy Foot" non-skid tire derived its name from the fact that the claws of a cat are concealed in her foot until she needs them.

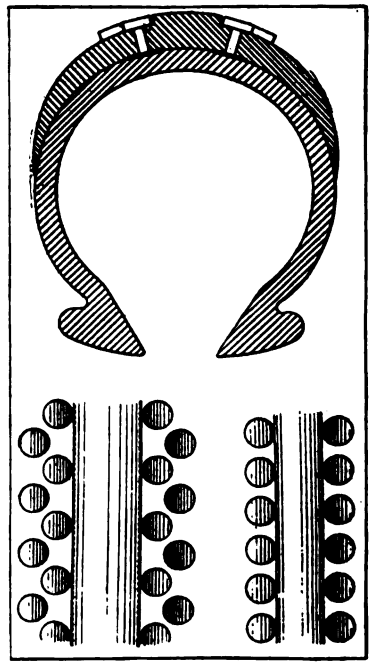

MICHELIN NON-SKID TIRE

The metal studs with which the tire was equipped were submerged below the surface of the rubber, and only appeared above it when in action. Examination of the tread failed to reveal any of the protuberances familiar in most types of non-skid tires, but when needed they made their appearance, and being of steel, hollow and cup-shaped, presented four cutting edges, which it was claimed would prevent skidding under all circumstances without affecting resiliency.

The European type Michelin non-skid casing here shown is composed of a rubber tread, with rows of metal studs on both sides. It

thus unites the advantages of both the rubber and studded tread types and possesses non-skid qualities under a greater variety of road conditions. The illustration shows a transverse section of the tire and also a plan of the tread surface, with a variation in the disposal of the studs, shown in the lower view.

Steel Tire Protectors

Another type of overshoe tire protector, which strengthens the tire, reduces casing wear, prevents blow-outs and improves traction, takes the form of steel tire armor.

A number of all-metal tread armors have been marketed, though not built on scientific principles. Some of them are very effective as anti-skids and protectors, but somewhat at the expense of resilience.

Chameroy Vesinet Tread—French

Those of the wire loop or drag chain devices are ingenious. They do their work well, and only when needed, being at other times out of the way and not liable to hurt the tire.

The Salama protector resembles heavy chain mail, fitting the tire closely and being hooked together but not fastened to tire, rim or wheel in any way so that it does not chafe the tire yet cannot stretch, roll or twist off. Its peculiar construction of case hardened centers joined by chain links renders it so flexible as not to decrease the resiliency of the tire. Although intended for continuous wear, it is detachable and adjustable, permitting it to be quickly applied or removed, and rolled up for carrying in the car. The wear is slight and weakened parts are readily replaced. By its use all wear caused by rough roads, riding in ruts and stone cuts are impossible. It does not retain heat, mud nor

water to the detriment of tires and it prevents skidding of any nature on any kind of road.

Serving the same purpose in a slightly different way are the Kimball tire case, already described in Chapter XXXVII, and the very similar Davis steel tire armor with its steel-studded tread plates.

Fabric and Fiber Treads

Cotton fabric, wood fiber and asbestos, often metal studded, have all been incorporated in tire treads to prevent skidding. One of the early examples, the Batavia bias fabric tread, consisted of rubber into which were vulcanized numerous loops of cotton fabric. It was claimed that this construction not only prevented skidding on wet asphalt or brick, but was an excellent preventive of punctures and blow-outs.

The Hutchinson was a British wood fiber steel-studded non-skid tread, while the Thermoid-LaFleur was an American special tread tire

Section of Thermoid-La Fleur Tire
[Showing position of fiber in special tread]

for which wear-resisting and anti-skidding properties were claimed. The tread surface here illustrated was composed of a special fiber, made moisture proof by a secret process, and inseparably combined with rubber, so that the end of each fiber extended to the surface.

The Empire disk tread had disks of fabric placed at intervals and extending down into the tread so that they could not wear out before the balance of the tire. The disks were of fabric tightly wound, fric-

tioned with rubber so that when the tire was cured they became an integral part of it.

Similar to this, the Bull's-Eye tread tire derives its name from a row of disks forming the tread consisting of frictioned tire fabric and sheet rubber rolled together and cut off into lengths the thickness of the tread rubber, inserted in holes died out of the tread strip and made an integral part of the tire by vulcanization.

The main portion of the Sturges studded rubber fiber tread here illustrated consists of one continuous piece of specially compounded fibre, 1-2 inch thick on the tread portion, and tapering down to where

STURGES TREAD

the tread enters the beads to approximately 1/16 inch. It is said to be very flexible, waterproof, resilient and tough. The one-piece construction does away with the laps along the side that all leather treads must have, and which let in water. It can be cemented at the bead of the casing, and fitted perfectly to any sort of tire, the edges gripping between the rim and the casing, and being held on by the same pressure and in the same manner as the tire itself.

The Canvas Tread tire is built up entirely of layers of a specially woven and rubberized fabric interspersed with cushions of rubber. The result is a tire having from 13 to 20 layers of canvas in which the yield-

ing effect is obtained by the working of the thin layers of rubber and the bending of the canvas, rather than by kneading of a layer of tread compound, as in the ordinary tire. Because the canvas construction is worked up to form the entire structure of both side wall and bead great durability is claimed.

Among its other properties the canvas tread tire is said to possess remarkable non-skid qualities, due to the fact that grit from the road works into the interstices of the surface layer of canvas, thus, building up an artificial tread that in some measure offsets the natural effects of wear of the original surface.

Anti-Skidding Chains

Skidding is perhaps the greatest danger that besets the motorist. It comes without warning, turns pleasure into peril and takes enormous toll in wrecked cars and human life. Statistics show that fully 90 per cent. of motor car accidents are due directly or indirectly to skidding. While the modern anti-skid rubber tread pneumatic tire is sufficient to prevent skidding under ordinary conditions and is a material help in rainy weather, absolute safety calls for something more when driving in mud or on wet pavements. This is especially true of fire apparatus, ambulances and all vehicles traveling at high speed. Metal studded treads are a great help, but unlike chains must be used all the time when once attached. In sand and snow they are not as satisfactory as chains because the latter grip at the sides as well as on the tread. Snow generally cakes between the studs of a metal studded tire so that after a time the tread practically becomes a smooth one. With chains this is impossible as the spaces between the chains is too great and the chains move considerably.

Thus the fourth classification of treads takes in chain and bar grips, wire loops, toothed rim plates, and other all-metal devices, as well as separate straps fastened on at intervals. This group includes both fast and detachable types, the detachables being more generally popular. The several chain grips are the best known in this class, being easily put on or taken off, doing their single duty to perfection, and taking up little room in the tool box. If used straight along, they are apt to cut the tire; but being so easy to handle, they are only expected to be used when needed. Most of the chain and bar grips are made with the cross chains loose, to avoid continuous pressure in one place. Thus the wear is evenly distributed. The separate straps, fastened at intervals around tire and rim, or hooking under the clinches, do effective service as creepers, and are very convenient. They are also serviceable

in case of bad blow-outs or cuts in the shoe, and indeed this is what they were originally intended for, though they were found to make good, cheap and convenient anti-skids.

Tire chains are primarily anti-slipping devices to prevent spinning of the traction wheels, but have come to be regarded as the most practical means to minimize skidding under unfavorable conditions. They grip the road and hold the wheels firmly, preventing slipping or sliding on wet and greasy pavements, also in mud, snow, sand and on ice. This ensures safety, preserves the tire, enables the heaviest cars to climb hills easily and reduces gasoline consumption by preventing lost traction.

Some fifteen years ago the New York Park Board prohibited the use of chains in any of the public parks or traffic roads of New York

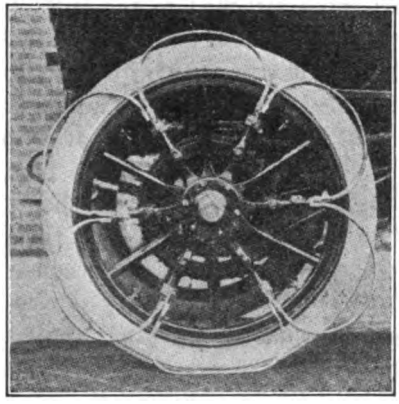

EYRE ANTI SKID—ENGLISH

City, claiming that chains were inordinately injurious to the roads, and similar action followed here and there in other places. Protesting motorists soon convinced the authorities, however, that chains were no more injurious than metal studded treads or other anti-skid devices and that safety was of greater importance. At present a few states restrict the use of chains to wet weather. Otherwise they may be used anywhere at the operator's discretion.

WEED CHAIN TIRE GRIPS

Weed chain tire grips have become the American standard tire chain equipment. The Weed grip consists of numerous cross chains between two side chains with connecting hooks fitted with a safety catch which prevents the grip coming apart in the event of a punctured tire,

all parts being given an anti-rust finish and the cross chains being specially treated to minimize wear. There are sizes to fit all standard tires. and each pair of grips is supplied in a neat canvas bag. Complete cross chains and connecting hooks are obtainable separately for repairing worn and broken sections. Being loose enough to creep about the circumference they do not injure the tire, and depending on no straps or attachments to hold them in place do not mar the finish of the wheels. They are easily and quickly attached or detached and can be rolled into a small package and conveniently carried in the car when not in use. A small attaching tool facilitates putting on the chains, but is not necessary.

Cross Shoe Chains

Several anti-skid chains on the market are similar to the Weed grips except for cross shoes attached to the side chains by steel links in flexible joints. The Perfection non-skid climber has links, smooth inside to prevent chafing the tire, which are said to collect no sand or gravel. The Traved non-skid device has studded steel cross shoes and is held firmly against the tires at every point of contact by steel springs connecting the ends of the side chains. The feature of Victor anti-skids is a roller bearing traction grip or cross shoe of heavy steel chain wire. A turnbuckle and tension spring keep the device snug. The Walker non-creeping chains have cross shoes consisting of steel rings each held by four cross chains, and a lever device in the side chains which keeps them taut, preventing creeping, sliding, rolling or loosening and preventing rattling.

Sectional Chains

Another type of anti-skid chain grips is attached not as a whole but in sections, usually four to a wheel, but sometimes more. It is a type especially well suited to use on large pneumatic truck tires, as it is unnecessary to jack up the wheels, and usually consists of extra heavy chain.

The Standley skid chains, usually seven to the wheel, are attached to as many hooks fastened to the inner side of the wheel rim, the links on the loose ends being strung on a spring ring that is tightened or loosened by means of a turnbuckle. No tools are required. The chains work diagonally across the tire, tighten automatically under a heavy pull, and release after the strain is over, thus preventing tire injury.

Easyon chains are individual chains fastened to the spokes of the wheel with leather-covered fasteners that do not injure the paint. A

long link in the cross chain grips the road like a mud hook yet is of such design that it does not injure the tire. The fastener consists of two galvanized snaps connected by galvanized steel links, curved to fit around opposite sides of the spoke. One link has a hook on one end, making it possible to clasp it around the spoke very quickly and easily.

Grus tire chains are fastened to the spokes of the wheel in pairs by means of an easy working fastener with dependable hooks rendering them adjustable to any size of tire. Rubber tubing protects the spokes.

Ruff spring tension tire grips are also attached in pairs about two adjoining wheel spokes. They are of easy adjustment and held in place by yielding spring connections and swivel end cross chains.

Boyer anti-skid chains are made in four sections formed into spider-like grip treads, each section having two rings in the center passing through the links of the chains, binding them together. These chains hug the tire closely, due to the action of coiled springs which are attached to their ends. The springs are hook shaped at one end so that it is a simple matter of snapping the chains in place into screw eyes, which are permanently inserted in a bolt or socket fitted in the felloe of the wheel.

Mud Hooks

Anti-skid chains are not always sufficient when the motorist encounters deep, sandy roads or faces the possibility of being stuck in the mud, and the mud hook stands for preparedness.

Terweldo Mud Shoe

The Terweldo mud shoe here shown is made of steel, pressed into shape over a forming die, with traction flanges seven inches wide and one inch deep. Four web straps, fitted with patent buckles and easily loosened, fasten it to the tire, each rear wheel of the machine having a

shoe attached. As the under side of the shoe is concave, the mud or snow is pushed into the rut and a step is thus formed on which the car can gradually lift itself out. The shoe projects beyond the sides of the tire, securing a greater traction power than if the same width, and has a lifting surface of seven inches across underneath the tire and an equal extent on top.

One known as the Dig-U-Out is an exceedingly simple contrivance made of metal, filling snugly around the curve of the tire and held in place by a leather-covered chain passing around the felloe. It

DIG-U-OUT MUD SHOE

is comparatively light in weight yet strong. A set of mud hooks occupies only a small space in the tool box, and when needed can be used to good advantage.

When power is applied, the Dig-U-Out prevents the wheel from slipping by acting as a lever, and practically lifts the car out of the deep mud or sand. It is made in 5 sizes, for pleasure cars and trucks, fitting both pneumatic and solid tires.

Other well-known mud hooks are the Hoover and Fulton.

TIRE CHAIN TOOLS

Applying non-skid chains to tires when the car stands in the garage or on a smooth, level road is a comparatively simple matter, but it is not so easily done on up and down grades or when the car is mired. Several little tools facilitate applying chains in any location.

Kum-a-Long is a little wire device for putting chains on mired wheels. It is snapped on the wheel near the top, and over its hooks are hung the first cross chains, leaving the chain stretched out on the ground to the rear of the wheel. The car is then driven or pushed slowly forward the length of the chain, when it will have been drawn over the wheel ready for connecting the side chain fasteners joining the ends together. The tool is then slipped back from the side chain fasteners about four inches, the side chains are lifted over the hooks and the tool removed.

A similar device is the Alcemo tire chain attacher which consists of a yoke-shaped piece of metal with a spring clip at the middle to clamp it to the spoke, and two hook-shaped ends extending around to the sides of the tire. The device is placed on the back side of the wheel with the hooks pointing upward. One end of the tire chain is hung on the two hooks and the car is moved forward eight or nine feet. This draws the chain completely around the wheel, so that it can be hooked together without reaching under the fenders or jacking up the wheels.

For repairing tire chains the Weed pliers are used. They have pointed claws at the ends of the jaws and a portion near the pivot point for closing up the ends of cross chain hooks when they are attached to the side chains. The claws are to force the hooks open when it is necessary to remove and replace a worn-out cross chain. Such repairs can be made without removing the whole chain from the wheel.

Puncture-Proof Tires

Many anti-skids are also "puncture-proof," which leads up to a general consideration of that class of tires.

It is easily possible to make a puncture-proof pneumatic tire, but this end has hitherto been gained at the expense of some other valuable feature of the tire. Solid and cushion tires are puncture-proof, or rather a puncture does not affect them; but these types were known before pneumatics came, and were abandoned in favor of pneumatics where speed or easy riding was required. For the sake of speed and resilience people will continue to use pneumatics, taking their chances with a puncture. After all, with proper precautions, punctures are comparatively rare, and it is every day becoming easier to repair tires, thanks to detachable rims, portable vulcanizers, and improved repair kits. The ideal tire, from the standpoint of speed and resilience, is the very one whose walls are thinnest and most pliable; or in other words, the one which is most liable to puncture. For complete immun-

ity against puncture, men will undoubtedly give up some tire resilience, but not very much.

Tire makers look upon "puncture-proofness" as a question of degree. This or that tire is 50 or 90 per cent. puncture-proof, according to their claims. This attitude is perfectly scientific, too. Whereas pins and tacks would readily prick a bicycle tire, a motor tire is proof against these, as well as hedge thorns and barbed wire, merely on account of the thickness of the rubber tread. A leather tread makes a motor tire proof against tin cans, bottle glass, and sharp flints, the cause of most accidents to rubber tread pneumatics. On the other hand, should a heavy car run over a substantial wire nail sticking through a plank, it would probably get a puncture, even if the tire were covered with sheet iron. Suppose a tire covered with a half inch of rubber should pick up a loose nail squarely; with every turn of the wheel it would be driven in deeper, and it is bound to penetrate anything short of a stout metal plate. There are several pneumatic puncture proof tires which contain metal plates, chain armor, and the like, and these have their patrons; but even when these do not cut down the resilience very much, the internal armor often proves a source of trouble. Chain mail vulcanized into the tread and side walls, as in the French Gautier tire, or inserted between the tube and shoe, makes a good puncture shield; but while these shields are marketed, they have not come into general favor. Some makers surround their tires with overlapping steel plates, or even with rigid wood or metal treads; but these greatly reduce the pneumatic effect, and the tires, while being more expensive, are in most instances shorter lived than the naked tire.

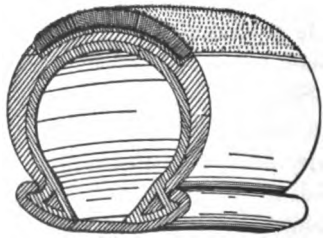

ANTI-SLIP TREAD—ENGLISH

An ingenious puncture preventive principle, as exemplified by the Midgley wire tread, consists in filling the tread of the tire with hairpin-like steel bristles, crimped to get a better hold upon the rubber. This method is efficient in preventing cuts from glass or other

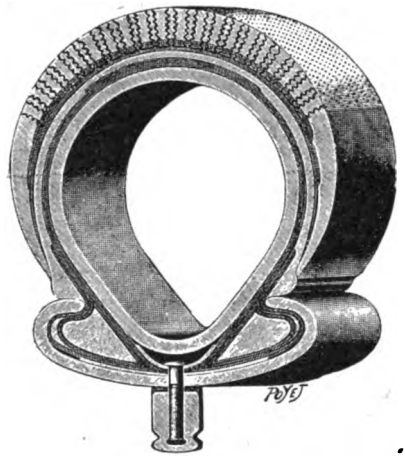

FALCONNET-PERODEAUD TREAD—FRENCH

broad-edged objects, especially those which attempt to enter the tire in a diagonal direction. However, these radial hairpins would seem to offer little or no resistance to the entry of a nail; though it may be

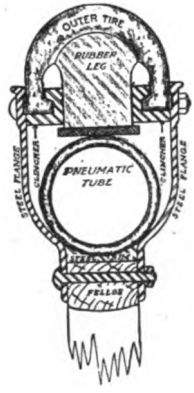

MITCHELL PUNCTURE-PROOF TIRE

repeated that few types of puncture-proof tires will ward off the direct thrust of a nail.

Many types of puncture-proofs are made on the principle of simple thickening of the tread, sometimes inserting a pad of felt, or wadded cotton, which does resist puncture very considerably. Woodworth Trouble-Proof tires, for example, have a strip of chrome leather

ELDER PUNCTURE-PROOF TIRE

DEVOLL PUNCTURE-PROOF TIRE

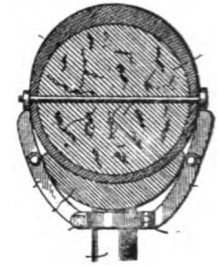

FITZSIMMONS PUNCTURE-PROOF TIRE

CORK FILLED TIRE

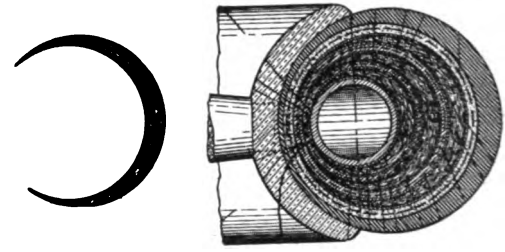

FABRIC FILLED PUNCTURE-PROOF TIRE

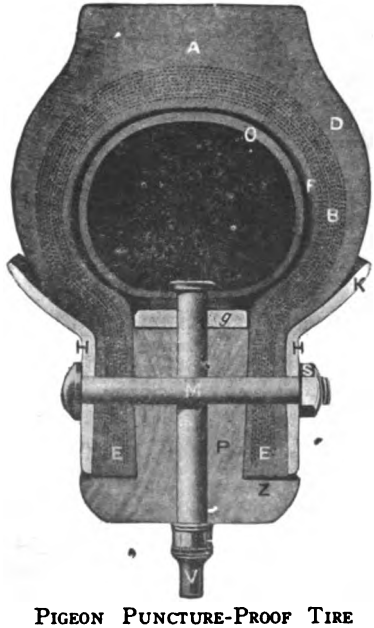

PIGEON PUNCTURE-PROOF TIRE

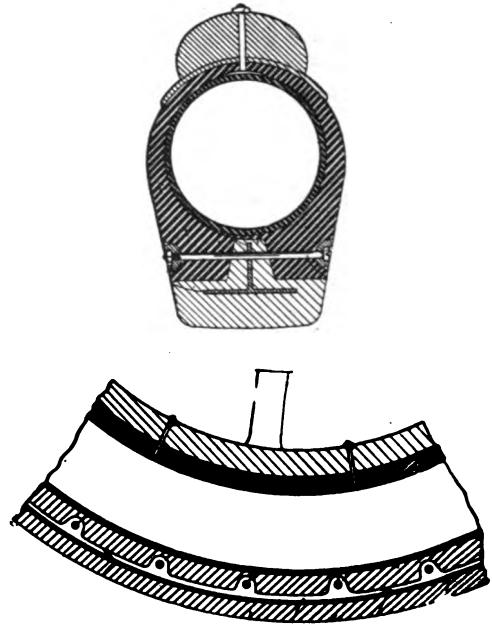

MAY PUNCTURE-PROOF TIRE

inside the casing along the tread to protect the inner tube. The insertion may be a layer of cork or any other substance, but the principle remains the same, and these inserted layers bring protection only at some cost of resilience. Tire protectors of this sort are described in Chapter XXXVII. Another type of puncture-proof contains a layer of rubber softened by some process and put in under compression, so that holes through the tire are automatically closed. This is the self-sealing class of tires, quite popular in England, which are discussed in Chapter XLV. Some might not call these puncture-proof, but the general effect is the same.

Though many puncture-proof tires are marketed, the resistence to puncture of the modern non-skid cord tire of today is so great that the average motorist thinks of using no other. If a greater immunity to puncture is desired, this and other ends at the same time seem to be best gained by combining several features in a special tread, made to fit any tire. These treads, usually of leather, offer great resistence to punctures, while generally carrying hobnails to prevent skidding, and at the same time relieving the tire from road wear. This is the form in which most "puncture-proofness" is gained, nowadays, and some of these treads are so effective as to practically solve the puncture problem. They all cut down resilience to some extent; but the loss in speed from this source is about made up by the better traction which they give, and at the same time they are serving other good purposes.

Most successful of the American trouble-proof tires depending on metal inserts is the Lee tire. This has between the fabric carcass and tread three impenetrable yet flexible layers of thin round steel disks. These overlap but do not touch, each being insulated by embedding in a rubber cushion, pliability being ensured and friction being prevented. The small size of the disks admits of their exerting no leverage in the rolling of the tire on the road, and consequently no drag on the car. The steel shield not only protects the inner tube but guards the carcass from stone bruises.

CHAPTER XXXIX

THE CARE OF TIRES

NOWADAYS, when pneumatics have ceased to be a novelty and their strength and weakness are generally known, the policy of the makers embodies a campaign of education in regard to the care of tires. This is wise; because if a buyer has been thoroughly apprised of the frailties of his goods and told how best to avoid accidents, the responsibility is to that extent thrown upon the buyer, and he cannot put upon the seller the blame for mishaps. The possibilities of the abuse of motor tires are so many that absolute guarantees, such as formerly applied to bicycle tires, are unreasonable and out of date. On the other hand, mileage guarantees with adjustment, and guarantees based wholly on failures due to defective materials and workmanship are general and fair to both parties.

The care of tires may be conveniently considered under five headings as follows: Storage by Dealer and User; Selection, Mounting and Fitting; Proper Maintenance; Careful Driving; Inner Tubes.

Storage By Dealer and User

The care of a tire really begins before it is put on the wheel, and this at once brings up the natural enemies of rubber and their influence upon storage by manufacturer, dealer and user.

Natural Enemies of Rubber and Fabric

It is fairly well understood that acids, oils, rust, heat and light are harmful to rubber, and that water is not, although the latter rots the fabric carcass and induces blow-outs. Like human beings, tires benefit by washing after exertion. If washed free from mud and dirt after every run, it is claimed that their life will be appreciably prolonged. In the same way painting tires does no harm and in a measure acts as a protector. While Americans paint tires white, Europeans often paint them black.

It is often necessary to drive through water, but water does not find its way to the inside of the casing very easily. It may penetrate in time, however, and if one is assured that enough has entered to wet the canvas, the tires should be taken off to dry. It should be remembered, too, that wet tires are cut very easily so that it behooves one to be very careful while driving on wet and muddy roads.

Cuts in the tread let water and gravel into the fabric and give much trouble. If small, they should be filled with thick rubber dough, and if large, should be vulcanized. Sand or gravel will accumulate in such a cut until the rubber tread is cut loose from the canvas, forming a sand boil of ever increasing dimensions. The fabric will begin to rot, resulting in a blow-out. Portable vulcanizers have been improved to such an extent that it is possible to vulcanize a cut fairly well without even having to jack up the wheel. The vulcanizer is strapped directly against the inflated tire, and requires only a half hour or so for the job. Still easier is the method of healing tire cuts with rubber doughs, many of which do good work.

Mineral oils, such as are used on roads to keep down dust, do not seriously attack rubber; but animal oils are very bad, and tires left standing on the floor of the garage in puddles of lubricating oil soon deteriorate.

Oil and grease are solvents of rubber. When the tread comes into contact with them the elasticity of the rubber is gradually destroyed and the tread softened. Eventually the cover separates from the fabric. When oil reaches the fabric the adhesiveness of the latter is destroyed and the tire becomes difficult to retread. Tires should not be kept standing on oily garage floors. Floors should be kept clean, and oil and grease should be swabbed off the tires with cotton waste saturated in gasoline. Occasional use of a good tire paint affords considerable protection against the injurious effects of oily roads.

When it is necessary to drive considerably over oily streets, wipe the tires off with gasoline before leaving the car in the garage. It is when the car is left standing for a considerable time in oil or water that injury results. Frequently tires are damaged by grease which has worked out of the differential housing into the brake drums and been thrown on the sidewalls of the tires. As soon as anything of this nature is discovered, the grease should be thoroughly washed off with gasoline.

Rusty rims ruin inner tubes and rot fabric. The rust eats into the rubber where the tube comes in contact with the rim, and into the fabric at the beads, inducing rim cuts. When rims become rusty they should be sand-papered and given a coat of rim paint. Further protection is afforded by the use of loose tire flaps which fit snugly between the tube and the rim completely around the wheel. These flaps are made of about five layers of rubberized fabric, vulcanized together, thick in the center but tapering to feather edges, and having a lining of smooth stockinette on the tube side of the lap to minimize tube

friction. They protect the tube from rust damage and also prevent any possibility of pinching caused by illfitting beads or imperfect rims.

The lock nut of the valve stem should be kept drawn so tight that no water can work in through the hole in the rim. Dents in rims should be removed as soon as discovered. Outward dents allow water, oil and sand to work in between the tire rim, while inward dents cause chafing wear. If the fabric of canvas-faced inner tubes becomes rusted from the rims it should be removed and a new facing applied.

Light and heat have a chemical effect upon rubber that causes deterioration. Thus the sun has a bad effect on rubber, though certain compounding ingredients lessen this effect. When rubber is continuously exposed to light, it loses its liveliness, hardens, cracks and the tire becomes unfit for service. Age has no effect upon tires if they are kept in a dry, cool, dark place. Tires should always be covered when carried on a car. If not in use during the winter months, careful storage under shelter will add much to tire mileage.

Protection of Tires in Storage

In itself, storage does not injure tires, experts conceding that storage for a year or more under proper conditions will increase the serviceability of a tire. If, however, the conditions are not right, then an equal length of time in storage will injure them.

While oily and fatty substances are injurious to rubber, ordinary care suffices to prevent injury from this cause.

Tires displayed in show windows of shops where the sun has full influence, rapidly degenerate. Comparative tests have shown that tires thus exposed for eight months, were in a worse condition than those which had been in daily use during the same period.

The reason for this fact is that the red rays of the spectrum have an affinity for the rubber gum, causing the degeneration referred to. According to one view, the sun's rays effect an extra cure, which puts the tire into the ranks of over-cured tires, rejected by the inspecting officer and not allowed to go out as first class products.

Dry heat, however, ranks higher than any of the other factors destructive of tires in storage, when it is sufficient to break down the rubber structure. Heat of 100 degrees F. has small effect upon the pure rubber used to impregnate and bind together the plies of friction cloth. The dry heat extracts the moisture in the tread, drying until it becomes brittle through the loss of its elasticity.

The careful dealer selects a location for storage where the sun cannot reach the tires and endeavors to make arrangements for moder-

ate temperatures in the store-room. If necessary he provides by sprinkling the floors for additional humidity in the air.

Stored tires should never be placed flat upon the floors or shelves, but should be arranged vertically, resting upon sectional racks specially designed for the purpose.

If a fresh tire is wrapped and stored in a dark room where there is a moderate range of temperature, and where it is protected from oil, grease and water, it will at the end of one year have improved to an extent representing 100 to 1,000 more miles than if it had been put into use as soon as made. Even a six-months' seasoning has proved to be advantageous. There has been no definite period set as a limit of the time during which improvement takes place. Several leading depot men are willing to give the standard factory guaranty with respect to tires stored for two years, being doubtful but hopeful as to the results of three years' storage. As expressed by authorities, the ideal conditions for tire storage are in a dark room, preferably a basement. Any windows not having a northern exposure should be heavily shaded. While direct solar rays are destructive to tires, reflected and refracted rays have probably some influence. The temperature should be between 45 and 70 degrees F. Freezing makes rubber brittle, while alternate freezing and thawing, to say the least, does it no good.

Spare tires demand equal care in their storage either at home or on the road. In the former case, they should be placed in a room with a temperature as nearly as possible uniform. Spare tires should always be wrapped in light waterproof coverings for protection from oil, light and moisture.

Jacking up the wheels every time a car enters a garage is sometimes done but is of doubtful value. The reduction in pressure and consequent lessened strain on the casings is nil, although it is popularly supposed that by relieving the tires from the burden of supporting the car they will wear longer.

When the tire is supporting the car weight, it flattens slightly, if the tires are pumped up as hard as they should be. The flattening causes a small decrease in the volume of the air in the tube and therefore when the tire is raised off the ground it regains its normal shape and normal volume. This small change in volume will not affect the pressure to any extent, since the decrease in pressure is inversely proportional to the increase in volume.

As for tire paints, they make the tire look better and may act as a preservative for a short time. They are really rubber cement with zinc oxide for color and a dryer as a rule.

Care of Tires in Winter

When a car is out of commission in the winter, the care of the tires is somewhat different from that required when they are in active use. The wheels should be jacked up to relieve the tires of all weight that would cause long continued fabric strain in one spot. They should then be pumped to a sufficient pressure to enable each to retain its normal shape only, and then wrapped separately in burlap or brown paper to keep out the light and moisture. It should be ascertained that the tire is perfectly dry both inside and out before being thus covered, for the dampness will cause deterioration. It may be well to remove each tire from its rim and to apply a rim paint to the latter to prevent rust.

As cold is not good for tires, it is advisable to keep them in a dark dry place, with a uniform temperature of about 60° to 75° F. When exposed to cold, tires begin to harden, then losing their resiliency and finally becoming fragile and cracking.

The house in which a car is stored should not be subject to great heat, nor should the windows admit rays of strong light which would affect the tires. Galvanized iron sheets attract great heat in summer and are very cold in winter, being thus particularly unsuited for the storage of rubber tires. Tires which have been used are less liable to decomposition from changes of temperature or from light than when they are new.

Expert opinion differs as to the temperature of the place where tires should be stored in the winter. The Science Bureau of the United States Tire Co. recommends the removal of the tires and washing them carefully with soap and water; then wrapping them in strips of paper or cloth. It is also recommended that they be kept in a dark room as nearly as possible at 50° F. If the tires are to be kept on the wheels a long time the latter should be jacked up, only about five pounds of air being left in each tire.

Selection, Mounting and Fitting

Selection of the right tire for the car it is to be used on and for the work it is to do is important. The maximum load which the tire is to carry should be known, and a tire of suitable size and strength selected. Small, peculiar zig-zag breaks in the fabric circumferentially appear when the tires are too small for the load and are taxed beyond their carrying capacity. All tire makers have such tables of weights and measurements. Many persons, also, do not realize that the rear tires not only bear two-thirds of the total weight, but that

they must also bear the tremendous driving strains and side thrust of skidding. In other words, the stress on the rear tires is three or four times as great as that on the front tires. The larger the rear tires the easier the car rides, and the smaller the front tires the easier it steers. Not only that, but the rear tires are much more likely to puncture or blow out, for which contingencies there should be an additional margin of strength; since every puncture permanently weakens the shoe.

Adequate sized tires allow a margin of safety that minimizes tire trouble and is tire insurance and economy. Owing to their added strength and increased resiliency the use of oversize tires means proportionately greater wearing power and reduced cost of upkeep. Oversize tires are built with an extra ply of fabric and proportionally thicker tread. Being half an inch larger in cross section than regular sizes allows for 30 to 35 per cent. larger air cushion, giving greater resiliency which prolongs the life of the tire by absorbing the strains ordinarily falling on the side walls and saves the car from excessive vibration.

A 4-inch tire, for example, can absorb the shocks and bruises that break a 3 1-2 inch tire, and its greater thickness offers more resistance to punctures.

Before mounting the tires, the rims should be carefully looked after. Rust injures tires, the injury being far greater than one would naturally expect. Unless the rims are rust-proof they should be varnished or painted. In case of clincher rims, the flanges should be gone over with a file, to guard against sharp edges or projections. The tube and the inside of the casing should be thoroughly dusted with talc, since this lessens the danger of pinching, and it will sometimes prevent the valve being torn off by the creeping of the shoe, by allowing the shoe to slip over the tube, the talc acting as a lubricant. One trouble about using inside flaps is that they prevent this slipping of the tube within the shoe. Still, they generally prevent the tube being pinched by the lugs, and also prevent its being caught under the toe or inside edge of the bead, when this tilts up, as sometimes happens.

In fitting the shoe, some makers insist that it be put on in a certain way, in order that it can stand the driving strains better, the threads being stronger in this direction than in the reverse. If this be true, it is a fault in tire construction, because the strain when the brake is put on suddenly is as great as when the clutch is let in suddenly. Tires should be interchangeable on the same axle; that is, the fabric should be equally strong in both directions.

Speaking of the importance of proper tire size in relation to tire pressure, "The Hub" has the following:

"Irrespective of the advantages due to cooler running of the large compared with the small tires there is the important item of less internal strain. Probably 90 per cent. of motor tires burst when traveling. This, of course, is due to the sudden increase of pressure, and could a tire be made large enough to keep the pressure absolutely constant (an impossibility), there would be no more likelihood of a tire bursting when traveling than when remaining stationary. We know full well from experience what will happen if we use a tire that is too small to bear the weight of the car. The increase of pressure will be greater than the tire can manage, and a burst will be the result. On this question it is interesting to note that the weight of the car is immaterial so long as it is tired in proportion to its weight.

"A tire of correct proportions fitted to a car weighing, say, five tons will last as long as a smaller tire fitted (likewise fitted in proportion, inflated to same pressure) to a car weighing 1,800 lbs.

"Not that the small tire may be built of lighter material than the large, but because the increase in pressure in both cases will be the same if the tires are fitted in proportion to the weights.

"This seemingly astounding statement is borne out by the fact that a tire is built not to support the weight of the car above it, but merely to hold the pressure contained in it.

"Of course from a constructional standpoint it must be remembered that the small tire would be stronger than the large one, owing to the fact that a tube of small bore can withstand a greater pressure than a large one, but the example given is merely dealing with the air in the tire and not from the constructional standpoint.

"Let us examine for a moment what effect rise in pressure has on the tire as a whole.

"Assume a 90 mm. tire encounters an obstacle of sufficient size to deform the tire 100th part of its original volume, or, in other words, flattens the tire so that the air is squeezed into 99-100ths of its original capacity. If the tire was originally inflated to 80 pounds pressure per square inch, the pressure is now raised to approximately 81 pounds per square inch, which gives an increase of 1 pound per square inch. Estimating the number of square inches in an 810 by 90 tire, as roughly, 1,000, and we get a total strain of 1,000 pounds, or nearly half a ton every time the tire is deformed 100th of its original volume. Similarly, the deformation of 1-200th of its original volume (a few ounces per square inch) will produce a total increased strain on a quarter of

a ton, and 1-50th of its original volume the enormous strain of nearly a ton.

"It will be seen, therefore, that however slight the amount of deformation the total increased strain on the tire is very great, and little wonder that the success of achieving 100 miles in the hour (when the deformation is great, due to the momentum of the car) depends solely on whether the tires can withstand the enormous strain (probably several tons increase several times per second) to which they are subjected."

Proper Maintenance

Under this head come several matters needing frequent attention and intelligent precaution. They include sufficient inflation, true alinement of wheels, correct use of chains, prompt repairs, and interchanging tires.

Inflation

The most important point in the proper maintenance of tires is sufficient inflation. It is the air cushion that supports the car, not the tires. The tires merely hold the air under pressure and thus make the air cushion possible. It has been authoritatively stated that three-quarters of all the tires sent to an early grave in the scrap heap, meet their untimely end because they are not inflated to proper pressure. About 15 to 18 pounds per cross sectional inch for front tires and 15 to 20 pounds per cross sectional inch for rear tires are the proper minimum pressure, but every tire manufacturer furnishes a printed inflation table or stamps the proper pressure on the tire.

If one is afraid to use the hand pump, it will pay him to get one of the many excellent power pumps on the market. The big 36 by 5-inch tires require about 100 pounds air pressure in order to get the most work out of them. There is a strong temptation to run them at 60 pounds, because they undoubtedly ride easier, and are about as fast. There is good reason in easing down the pressure a bit, because speed and resilience are what pneumatics are for, and there is no use in overdoing the pressure, which would cut down both these desirable qualities. Still, a well inflated tire will run a hundred times as long as a deflated one, so that one's pocket-book must be consulted when deciding on the pressure that he is going to use.

By far the larger part of tire troubles come from running "soft." Rim cutting, side cracking, heating, creeping, and punctures are among these. The thicker the walls, the more a soft tire will suffer from the incessant bending, owing to the leverage brought upon fabric threads and rubber, the former chafing and breaking, just as one breaks a wire

by bending it back and forth, while the rubber has its elasticity kneaded out of it and its virtue destroyed through heating due to friction. As a result the plies of fabric separate from each other and roll up, then begin to rub against each other and crack. Soon some point becomes too weak to hold the air pressure and a blow-out occurs.

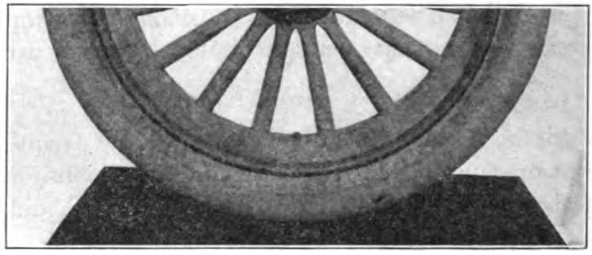

PROPER INFLATION
[This tire is inflated to the proper riding pressure. Every tire should stand up round like this under a full load]

Sufficient inflation is particularly important in the case of clincher tires because of the principle and construction of the clincher type of casing. The clinch or hook of a one-piece clincher rim fits over the lip-shaped bead of the clincher bead, holding it securely in place. Even under normal conditions there is a certain amount of wear against the

IMPROPER INFLATION
[This tire shows the degree of inflation at which many tires are run. It is not pumped up enough and thus will not give the maximum of service]

sides of the tire by these clinchers or hooks. When the tire is underinflated the wear is greatly increased by flexing of the tire under the load, and eventually rim cutting occurs. The outside cover of rubber is soon worn away, after which the chafing and rubbing gradually wear through the fabric above the bead, aided by the rotting action of moisture, until finally a blow-out occurs. This disintegration of the casing

is often hastened by dents in one-piece clincher rims which are readily caused by running on a soft tire. These bent places form sharp projections which dig and cut severely into the tire. Clincher rims should be examined frequently and straightened if necessary. It is especially important to keep clincher rims free from rust. Nearly one-third of all clincher tire failures are due to rim cutting and could be avoided by proper care.

In guarding against under-inflation, car owners should remember that over-inflation should likewise be avoided, being liable to fracture the canvas when running over an obstruction, and through unnecessary jolts straining the delicate mechanism of the car. Moreover, inflation should vary with the load in the car. When only two persons are to occupy a five-passenger car the inflation should be less than when fully loaded.

Good authorities claim that a tire which does not flatten perceptibly under its full standing load is inflated just about right for fast running. This, however, is accurate only within considerable limits, much depending upon the judgment of the driver in each particular case.

Under-inflation is more dangerous than over-inflation, so that one need seldom fear that the heat from running will increase the pressure unduly. This heating is injurious, but not in this way; because the more a tire is inflated, the less it will heat, other things being equal. The heat which it is possible to raise in a tire by overspeeding is probably greater than most people think, as the temperature sometimes rises above the boiling point of water. At such temperatures the layers of canvas are apt to become separated, through the softening of the rubber, so that the tire bursts.

Most persons who run on soft tires do so through ignorance, not knowing what pressure they are carrying. There are plenty of pressure gages, but there is much dissatisfaction with those which are attached to the pump. A tank may register 100 pounds pressure, and a hose from this attached to the tire valve will seldom deliver more than 80 pounds to the tire, owing to the friction in the valve. Even less accurate than this is the pump gage, affected by every stroke of the pump, with the telltale vibrating so that readings cannot be taken. A gage that connects with the valve directly is fairly accurate, but rather inconvenient. If a pressure tank or a registering pump be used, one can safely figure that the gage shows 20 pounds more than the tire really holds. A standard gage used only for testing pressure and not attached to a pump is not only a value but is a necessity.

Alinement of Wheels

Faulty alinement of automobile wheels is responsible for the excessive premature tread wear of many tires. Where this condition is present, the wheels, instead of running parallel, run at a slight angle to one another. It it due to a bent steering knuckle or axle, improper adjustment of the steering rod or wear in the steering connections. Bent knuckles and axles are usually caused by careless driving, severe jolts and running against curbstones. The result is a diagonal grinding action on a tire at the point of contact with the road that wears down the tread very rapidly. The speed with which a tread will wear down under such circumstances depends upon the degree of misalinement and the nature of the roads over which a tire is run. As soon as unusual tread wear is noticed the motorist should make certain that all wheels and rims are in true alinement.

As this is an ailment which usually affects merely the front wheels, it is not a particularly difficult one to detect. It may be suspected from the peculiar appearance which the tread presents, and this suspicion may be readily verified by measuring the distance with a stick between the felloes of the opposed wheels ahead of and behind the axle. A variation of more than one-eighth of an inch in these two measurements will prove detrimental. Normally, as the car comes from the factory, the front wheels should toe in to about this extent, this being regarded as an aid to steering control. A severe strain or accident to the car can disturb this adjustment and should such be the case it cannot be looked after too soon.

When a front wheel is out of alinement it is generally on the side opposite the steering wheel. The driver will guide himself from the wheel that is in direct line with his steering gear. As a result the opposite tire will continually run out of line. Demountable rims applied crooked or allowed to run loose produce similar tread wear.

Proper Use of Chains

Many tires are cut, gouged and prematurely ruined by the improper use of anti-skid chains. Metal and rubber are enemies. Rubber gives and metal does not. Continual pressure causes the metal to dig into the tread if the chains are too tight. Paved streets increase this pressure so that chains quickly ruin tires. Some types of chains are fastened to the spokes so that they are stationary and always grip the tire in the same place. Sometimes a piece of ordinary chain is wrapped spirally around the tire. Perhaps the most pernicious practice of all is the application of chains to non-skid treads. In all these

instances the damage is speedy and positive. The best chains to use are those of the floating type. These should be so adjusted that they may creep gradually around the tire and distribute the wear, yet care should be taken that they are not too loose. In that event they will creep so rapidly as to scrape and cut the tread. The greatest abuse of all is the continuous use of chains on city pavements. Non-skid treads are designed especially to remove this necessity.

Prompt Repairs

The proper care of tires implies frequent inspection and prompt repair of all small cuts.

It is well to carry at least one extra case and two inner tubes for emergency. The injured tire can then be removed at once and given attention by a competent repairman. If it is necessary to make emergency repairs on the road, have the tires vulcanized at the first opportunity. This will avoid serious developments. Most cars are now equipped with demountable rims so that spare tires may be carried inflated and ready for immediate change; which not only reduces the time for changing tires to the minimum, but wholly does away with the annoyance of roadside tire repairing.

Although it is impossible always to avoid sharp stones, glass, snags, etc., the outgrowth of this neglect—quick ruin—is easily avoided. Prompt repair of seemingly insignificant cuts often doubles the service a tire will render. All that is necessary is to wash them out thoroughly with gasoline and plug them up with tire putty after the injury has been coated with patching cement. This requires only a few minutes time.

If neglected, such cuts accumulate mud, gravel and dust, which enlarge them at every revolution of the wheel. Gradually this dirt is forced under the tread, separating it from the fabric and forming a mud boil or blister that soon breaks through excessive wear. Presently the rubber becomes loose for some distance around the original cut. Thus the protection of the rubber is taken away. Moisture soon rots the exposed fabric and a blow-out results.

It takes but an inexpensive can of repair gum to forestall the formation of sand boils. If one does form, vulcanization at once will save the tire carcass from early deterioration. Quick action is essential in these repairs. Often the repair can be made by the motorist himself with a small portable vulcanizer, but the cost of an expert repair man's services is insignificant in proportion to the increased mileage thus assured.

It is a wise and profitable plan to take off all tires about once in six months, examine them carefully and make all necessary repairs; test all the tubes; clean the rims and paint them.

Interchanging Tires

To realize maximum wear from a set of tires it is necessary to change them occasionally from one wheel to another. This is because the wear is not alike on all wheels, the right rear tire wearing faster than the other three.

Since power and traction come from the rear wheels the rear tires get the hardest wear. One drives on the right side of the road and roads are crowned. The car, nearly always, is slightly tilted, more weight being on that side, therefore the right rear tire takes hold first and bears more traction than the left rear.

When in motion the left rear tire rolls along comfortably on the smooth middle portion of the road, while the right rear gets the rough going on the off-side—the sharp edges of the asphalt, the rocks and ruts and is more likely to encounter objects thrown on the side of the road. Then again the rear tire bears the brunt of the stopping, sometimes sliding, a majority of the wear falling on the right rear.

The tire receiving the next hardest usage is the left rear, then the right front and last the left front. So when a right rear begins to show signs of wear, put it on the left front wheel. And likewise change the left rear to the right front.

Careful Driving

When running on the road there is a great difference in the lasting powers of tires under different drivers. One driver may make a set run two or three times as long as another can. Those persons who only run cars in order to display their wealth probably do not care how long they last, and may even boast of the number that they have worn out. Those who run motors for the pleasure of it and can afford to do so, will not trouble themselves about their tires, and probably enjoy reckless driving. A low-hung car with long wheelbase is not much affected by a burst tire, especially one on the rear wheel. Consequently, such drivers will take chances on sharp turns and rough roads. Shock absorbers save much of the discomfort of rough going, and undoubtedly ease the strain on the tires. Skidding on corners can be largely prevented by the various attachments on the market, though such anti-skids greatly increase the strain on the side walls of a tire. Quick turns at racing speed will often wrench off a tire when fitted with anti-skids.

Any roughness in the road surface is greatly magnified in its effect by high speeds. The same road which seems smooth at moderate speeds will seem quite rough at very high speed. If there is a watershed or "thank-you-ma'am" to cross, the shock is much less, if it is taken on a slant. The wheels then get the shock one at a time, instead of two at once, so that the shock is cut in two. When crossing freshly broken stone, it is not absolutely necessary to slow down, but the clutch should be taken out, letting the car cross the strip by its own momentum. The tires are thus only exposed to the rolling motion, which seems to be less hurtful than the driving or traction motion. This can only be done, of course, for narrow strips of road; but this is the way in which it generally occurs.

Of the many things for the careful driver to avoid the following are most important.

Go over bumps slowly to avoid severe jolts. This will prevent fabric breaks and stone bruises.

Avoid sudden starts, stops and skidding on sharp turns. This will prevent excessive tread wear caused by sliding of the rear wheels. Quick starting of a car by suddenly letting in the clutch does not give the rear wheels a chance to roll, and the friction on the tire is severe. Sudden application of the brakes while the car is running at high speed locks the wheels, causing the tires to be scraped over the road for several feet. This practise soon wears the tread through to the fabric. Actual tests prove that locked wheels do not stop a car as quickly as when the brakes are applied gradually. A scraped tread is likely if both drums of the brake do not grip with equal tightness. When one wheel stops the car the wear is enormous. Take curves and corners at a moderate pace, if necessary with the clutch out to reduce side strain and grinding wear on the tread.

Avoid running in ruts and scraping tires against curbstones. This prevents sidewall chafing and gouging, exposure of the fabric and quick deterioration. On frozen roads the tires often break through the crust and the sidewalls undergo a grind from the sharp edges of ice and frozen mud that quickly scrapes off the thin layer of rubber which protects the fabric. Most of the sidewall wear comes on the outer side of the tire, and it is a help to reverse the tire, worn side toward the car.

Avoid driving in car tracks. The tread of a tire is thicker than the side walls. When a tire is run on car tracks the wear is concentrated on the side of the tread so that the thin part receives an undue burden. The sharp edges of the flange of steel rails, often ragged, soon cut through the rubber.

Avoid driving over large stones, holes and backing rear tires against curbstones. This prevents fabric breaks followed by blow-outs. Blunt obstructions of this sort force the casing inward with a sharp bend. The tread, due to the great elasticity of rubber, escapes injury. But the fabric is not elastic. It is already stretched outward by the air pressure inside. If the blow forces the tire in far enough some of the fabric plies are stretched beyond the breaking point. As the depression is inward the inside ply is strained the most and is first to break. The tread does not show this internal injury and the tire is continued in service. Gradually, as the tire flexes in use, the injured ply chafes and breaks the remaining plies one by one until a blow-out occurs, the fabric usually splitting diagonally.

Avoid driving with a fender so bent that the tire occasionally strikes it, or with the tire rubbing against the steering rod when turning around. A badly cut tread or sidewall wear may result.

Avoid spinning the rear wheels when one or both of them is in soft ground, gravel or sand. It causes severe abrasion, scoring and cutting according to the nature of the ground. Use of first or second speed, and careful "easing in" of the clutch is better in such instances than applying full power suddenly to force the wheels to dig their way out. Instead they often dig themselves in more deeply.

The Care of Inner Tubes

In caring for inner tubes many things should be considered. If the inside of the tire casing contains dirt it is sure to chafe the tube, or if a nail or a pebble finds its way inside the casing it makes a weak spot. The tube should never be allowed to stick to the casing, and this is easily prevented by dusting the tube and the inside of the casing with soapstone, graphite or talc, all being lubricants that reduce friction between casing and tube, prevent excessive chafing and consequent heating.

Without sufficient lubricant the heat generated is sometimes so great that the tube becomes vulcanized to the casing and tears when its removal is attempted. Too much lubricant, however, is likely to harden in lumps which grind into the tube like dirt or sand. Too much soapstone collects in one place, crystalizes and heats to such a degree as to burn the tube, making it thin, brittle, lifeless and honeycombed in appearance. Powdered graphite, though rather unpleasant to handle, is the most durable and efficient lubricant. Racing drivers use graphite, but only after sifting it on to the revolving tube through a sieve made of cheesecloth. This method is necessary, otherwise several

flakes of graphite might accumulate in one point, thereby causing deterioration—the oil in graphite being a foe to rubber.

For the average motorist who does not run his car continuously, day in and day out, the judicious use of tire talc is recommended.

Running a tire flat, after a puncture, often ruins the tube. By allowing the tube to be pinched between the rim and the bead it is gradually weakened and an internal blow-out of the tube only almost certainly results, or the tube may be pinched between the spreader at the base of the valve stem and the stay bolts, and the result is the same.

As to spare tubes, they are very carelessly handled as a rule. When folded and carried in the tool box they come in contact with greases, oily waste and tools with all sorts of angles and edges. The tube is shifted and jarred about and this chafes and cuts or wears through the edges.

Waterproof cloth bags or cases well dusted with French talc will obviate all this. They also keep tubes out of bright light and sunshine which dry them and render them brittle and unelastic. Newspaper wrappings are a good substitute for tube bags. Spare tubes should not be carried in the cardboard boxes in which they are bought, as chafing will result.

Inner tubes which have become slightly hardened through having been exposed to the atmosphere, may, it is said, be made to regain their original condition of elasticity, if they are immersed in a solution consisting of one part of ammonia to two parts of water. In one trial made of this method an old inner tube after half an hour's immersion was available for use. The solution neutralizes the tendency toward the formation of harmful acids. Ammonia likewise acts as a preventive of hardening.

It has been suggested that the simplest way of keeping inner tubes soft is placing them in hot water about once a month for ten minutes. Another way recommended is to use a solution of turpentine and alcohol, pouring the turpentine into the spirits. When the mixture is applied to the tube the alcohol will evaporate. None of the above suggestions is guaranteed, be it noted.

Tubes that are to be stored should be inflated slightly, enough to cause them to stand round. They should be piled in the same manner as the casings, with a covering to prevent their exposure to the light. They may be allowed to remain in casings if they are well dusted with French talc before insertion.

Pumping a little air into inner tubes when they are to be stored is to prevent permanent creases from forming, which, when the tube is

put into service would be a source of weakness, and might ultimately lead to a burst.

Commonly Neglected Injuries

Some of the most commonly neglected injuries to pneumatic tires, how they are caused and may be avoided, are concisely described and

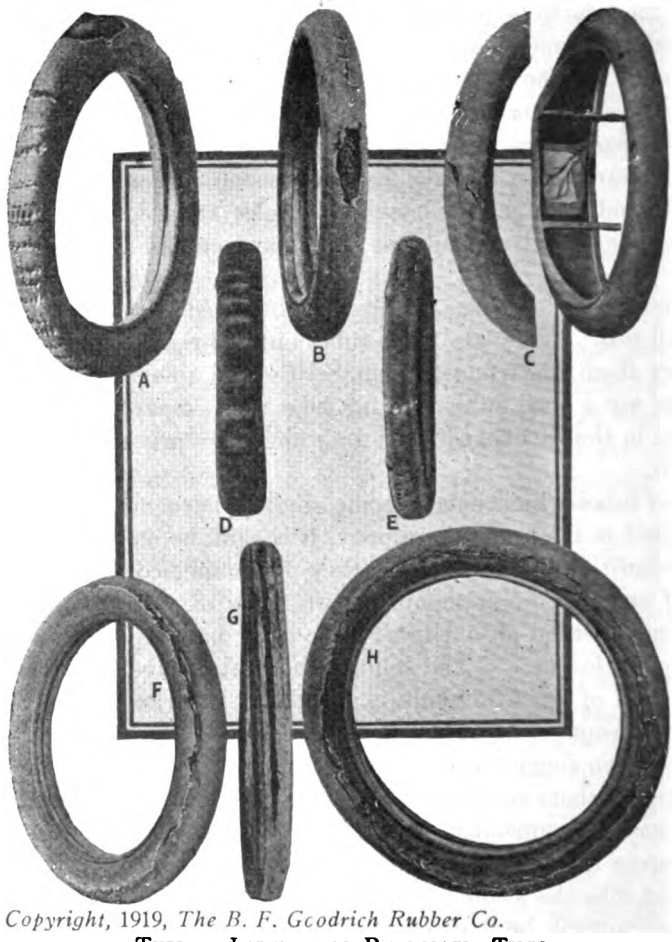

Copyright, 1919, The B. F. Goodrich Rubber Co.

Typical Injuries to Pneumatic Tires

illustrated in a little tire handbook by The B. F. Goodrich Rubber Co. as follows:

Injured by Chains

A—The result of improper application of tire chains. Leave chains just loose enough so that every time the wheel turns the cross chains will not strike the same spot in the tire.

Skidding

B—The effect of skidding, caused by a sudden application of the brakes. Part of the face of this tire has been scraped off.

Blow-Outs

C—The result of neglect. First, the tire was cut entirely through by some sharp object. An inside temporary patch was applied but a permanent repair postponed too long. The temporary patch gradually pulled away from its original position and was forced through the break. Whenever inside patches are used, an outside emergency band should also be applied, and both removed and a permanent repair made as quickly as possible while the injury is small.

Under-Inflation

D—The damage done by under-inflation. The wavy condition of the tread of this tire is due to its having been run soft, with insufficient air, with consequent loosening from the fabric through no fault of manufacture. Most tire manufacturers have inflation schedules which they are very anxious to place in the hands of every tire user.

Neglected Cuts

E—A casing with two-thirds of its life wasted. Neglected cuts in the tough rubber tread always cause it to blister. Sand and dirt are forced into the cuts and work around under the tread. Note several large "bumps" where these have accumulated. If a tire is carefully watched for these cuts, a little plastic will heal them quickly and no damage will result.

Running in Car Tracks

Tire F has given less than 2,000 miles' service, but it has been run in car tracks and the rubber is worn down to the fabric in a line following the circumference of the tire. Furthermore, the fabric has become worn and blistered. The casing is beyond repair.

Faulty Alinement

A more common tire injury is shown in illustration G. This effect is due to faulty alinement of the front wheels. A bent axle or steering knuckle may be responsible or possibly the demountable rim was not perfectly applied.

Accidents are not always responsible for the front wheels being out of alinement but frequently this is the case. All cars, through no fault in manufacture, are subject to this condition, and the first indication will be given when the tread of one or both tires wears as though

a rough file had been used on them. If the tread becomes worn through, and the fabric affected, the tire is beyond repair. Test the front wheels frequently and be sure that they are in proper alinement.

RUT WORN

H—A tire that has been run in ruts. This wear on the side-walls occurs regardless of whether the ruts in the road are too large or too small for the tire. Keep out of the ruts. Tires were not made to withstand wear of this kind.

CHAPTER XL

INNER TUBE REPAIR

WHEN a pneumatic tire becomes deflated in use, an inner tube repair is usually in order because of a puncture caused by a tack, nail, piece of glass or other object that has forced its way through the casing. Or the inner tube may have been pinched by careless use of tire tools in applying the casing to the rim, or by riding the tire too soft. Sometimes, too, fabric breaks and rough places in the casing wear holes through the inner tube as the result of friction caused by flexing of the tire. Such punctures are more readily repaired than the larger breaks and rips caused by blow-outs, although much can be done with the latter in the repair shop.

When a car has a very long wheel base, it is not easy to notice that a tire is running flat, especially if it be on a rear wheel, where most tire troubles occur. A more or less considerable disturbance in the steering announces a puncture in the front tire. If the air is escaping quickly, the sooner one stops the better. Even then, if the speed is rapid, the tire is apt to creep enough to injure the valve seating. If the tube was well dusted with talc when it was put in, the shoe may possibly slip over the tube and not tear out the valve. Even when the lugs have been kept well tightened, which is not always the case, the tire begins to creep soon after it has flattened.

Road Repairs—Valve Troubles.

If the casing is found on examination to be in good condition, it is necessary only to repair the puncture or put in a spare tube in place of the damaged one. But first, the valve should be examined. By doing this, before taking off the tire one may sometimes be saved the trouble of making a tire change. Occasionally, too, a speck of dirt in the valve will cause it to leak rapidly, requiring its removal and cleaning, or the substitution of a new valve inside, a supply of which every motorist should carry in his repair kit.

Removing Tires and Locating Leaks

There are a number of ingenious tools on the market which facilitate the removal of a clincher tire. Even with all these, however, it is not always easy. The bead may stick tight in the clincher seat, and

should first be dislodged all the way around. Either with the various patent tools, or plain levers, it is possible to take off a shoe single handed, by prying the bead upward and outward, which brings the lever down toward one of the spokes. As a section of the bead is thus lifted up, the lever should be tied to the nearest spoke and another section gone at with another lever. At times it is possible to hold one lever with the foot and the others against the leg and in the hands; but with large tires trouble will be saved if each lever is tied, as it is brought down toward the spokes. Most 32-inch or larger tires are now of the straight-side type for split rims which are easily contracted with special tools for removal of the tire.

Once out, it is often necessary to put the partly inflated tube under water or use a puncture finder to locate the leak. The shoe must also be examined, and the cause of the trouble removed, if still there. Sometimes this is not easy to find, and there are cases where the cause was a wire nail or tack, so short that it did not reach through the tread, except when the head was sunk into the rubber momentarily by being struck with a stone in running. It is useless to mend the puncture unless the cause is removed or avoided.

Most inner tube repair manuals supplied to motorists lay special stress on the various quick repair schemes, of which the market is full. Temporary repairs are often necessary, but the only way to repair rubber tires and tubes permanently is to vulcanize them. Ordinary rubber cement sticks very tight for a while, but after all it is raw rubber, which means that it is susceptible to changes in temperature and to oxidation, under which conditions it loses more or less of its adhesive property. Vulcanizing bakes the cement and makes the rubber stable in its peculiar properties.

Quick Repair Devices for Ordinary Punctures

When the puncture in the tube has been located, the procedure depends upon the size of the hole. If it is quite small—the merest pinhole—there are a number of ways of mending it quickly.

Inner Tube Patches

Most of the leading tire manufacturers offer plain molded or die-cut patches in assorted shapes and sizes for inner tube repairs. The molded patches are tapered with edges feathered and the inner sides roughened to afford the utmost adhesion. A liner is usually attached to keep the surface clean. They may be applied either with ordinary rubber cement and vulcanized or with cement and acid solution by the cold cure.

Emergency Vulcanizers

It is well known that dentists and rubber stamp manufacturers do a good deal of vulcanizing under pressure by means of small steam generators, with which very accurate work can be done, and that the process is very simple.

Putting these things together, inventors have produced a host of small steam, gasoline, alcohol, and electric vulcanizers, with which it is possible for a comparatively inexperienced hand to make quick and serviceable small repairs upon either the tube or shoe. Though these

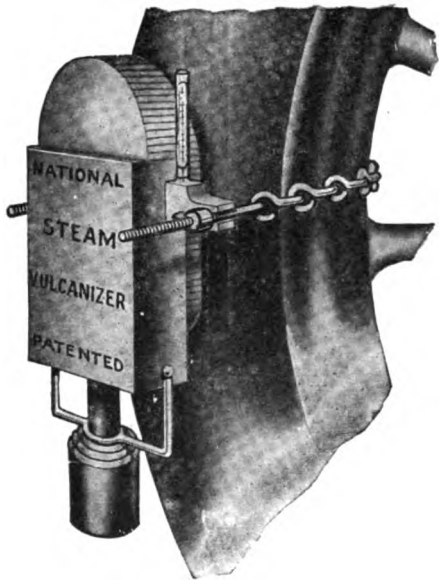

National Steam Vulcanizer

vulcanizers were as first made for the small repair shop, numbers are sold to motorists for the home garage. They are even made so small that they can be carried in an automobile tool box and screwed directly upon the wheel for repairing a cut in the shoe without even taking it off, the whole process not taking much more time than is needed to put on a patch.

Steam Vulcanizers

Most emergency steam vulcanizers consist of two metal containers, one for water and located outside the heating surface, the other below it for fuel, either alcohol or gasoline. When lighted, the heat trans-

forms the water into steam and the cure is effected on the same principle as the large steam vulcanizers used in tire factories, the steam eliminating the danger of burning the rubber. Most of these vulcanizers have a flat heating surface for tubes and a concave surface for casings, together with thumb screw and chain clamps for holding them in place. Steam is made in about 7 minutes and the complete cure is effected in 15 to 20 minutes.

The Shaler steam vulcanizer maintains the vulcanizing temperature automatically as long as desired by means of a thermostatic damper which regulates the intensity of the alcohol flame. The National and H. F. Baby vulcanizers both employ alcohol as fuel, have thermome-

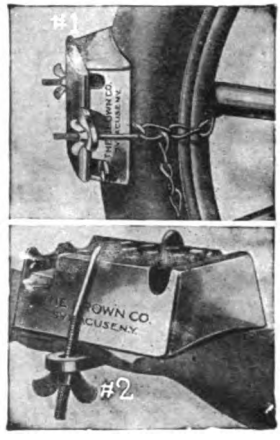

BROWN GASOLINE VULCANIZER

ters giving the exact temperature at all times, and burners which can be set to maintain a steady even heat for any length of time. The Positive and Nurinkle represent that class of vulcanizers in which measured quantities of water and gasoline produce the proper amount of heat, while the Wizard, Two-in-One and Simplex are of the type having a hollow metal body partly filled with water at the factory and never needing to be refilled. To use them it is necessary only to measure out a specified quantity of alcohol or gasoline and ignite it. The Star comprises a miniature steam boiler with alcohol burner and pressure gauge. Vulcar consists of an alcohol burner and a water container and perforated vulcanizing plate which supplies moisture to the rubber while it is being vulcanized.

Gasoline and Alcohol Vulcanizers

Of the various dry heat vulcanizers those using gasoline as fuel were the pioneers. One of the earliest portable vulcanizers was the Red Cross, which was made both for steam and dry heat. Clamps were used instead of weights, and like dental vulcanizers, it blew off at a certain steam pressure, so that the proper heat was maintained. The dry heat vulcanizer had an arrangement of burners whereby gasoline flames could be thrown in any direction. A simpler machine consisted merely of a mold and clamp, with a small dish underneath, which held just the amount of alcohol needed to vulcanize the patch. All that was necessary was to clamp in the tire, light the alcohol, and leave

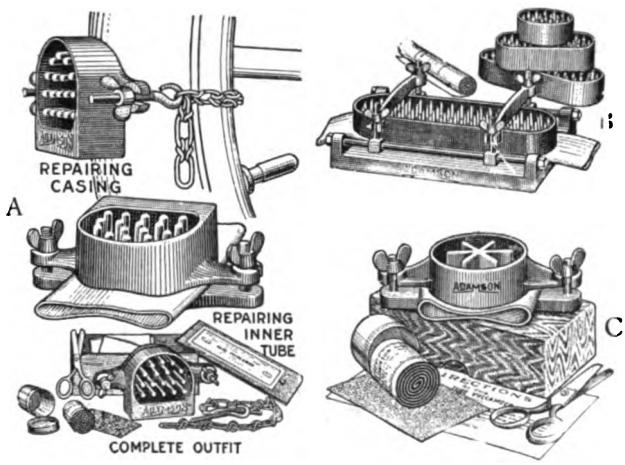

Three Styles of the Adamson Vulcanizer

it until it was burnt out, when the job was done. Dry heat vulcanizers were also made by all of the companies in the early days of bicycle tire manufacture.

A very ingenious adaptation of this principle is the Adamson vulcanizer, made in several styles and sizes for tubes or casings, or both. Its principal feature consists of a heating plate and gasoline cup in one unit having numerous upright metal studs cast within it to carry the heat down to the rubber and distribute it evenly. After clamping the device over the repair, a specified quantity of gasoline or alcohol is poured into the cup, ignited and allowed to burn itself out, the amount being calculated to ensure a complete cure in 15 to 20 minutes. For

inner tubes only, the vulcanizer is circular or elongated with parallel sided and semicircular ends, while the Adamson Universal for both tubes and casings have both a cup and a well for fuel so that it may be used on both a horizontal and a vertical position. The Brown vulcanizer is of similar construction. The Imperial, Zenith, Paeco and other outfits closely resemble the Adamson inner tube outfits.

The Shaler vulcanizers for tubes, and also for both tubes and casings have a lamp which burns either gasoline or alcohol and contains the fuel in such a way that it is impossible to spill blazing liquid even if the vulcanizer were accidentally upset. There is no smoke, soot or dangerous exposed flame and the fuel charge is measured to give the correct cure. Tube repairs are cured on an asbestos inlaid plate which is swiveled to ensure uniform pressure and prevent pinching the edges. A detachable handle facilitates handling while hot.

A French device comprises a casing *A*, which is trapezoidal in section, and made of aluminum or other metal. This casing is closed by a cover *B*, and constitutes the heating element for vulcanizing.

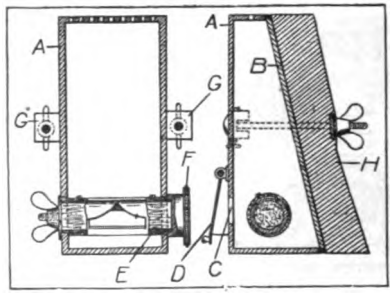

A FRENCH PORTABLE VULCANIZER

The cover can be flat, as shown in the drawing, or an arched or convex cover may be used.

The opening *C* is closed by a movable plate *D*, which is hinged to the casing and admits air to aid combustion. At the top of the casing there is a set of holes through which the products of combustion are exhausted.

The heater is made up of a hollow brass cylinder *E*, closed at one end, while the open end is closed by another cylinder of the same metal fitting over it. The cylinder is provided with a rectangular opening on its side, which is covered by a metallic screen, and, corresponding with this opening, there is a heart-shaped opening in the outer cylin-

der, constituting an aperture that is adjustable both lengthwise and transversely. This opening is the burner of the heater, and is also used for pouring the fuel into the heater. Inside of the cylinder there is a braid of asbestos or some other absorbent material. By turning the knob *F*, the length of the aperture and the width of the flame are regulated, thereby controlling the temperature of the vulcanizer.

The side of the casing is provided with two lugs *G* through which are passed two bolts that, in connection with iron washers and thumb screws, are used in clamping the object to be vulcanized between the wooden blocks *H* and the heating element. The temperature of the apparatus is measured by a thermometer that is not shown in the drawing.

Combustible Disk Vulcanizers

For curing inner tube repairs only, several combustible disk vulcanizers are now available for the motorist's use. The Shaler 5-Minute, Jiffy, Marvel, and Horsey are among the well known makes. Each

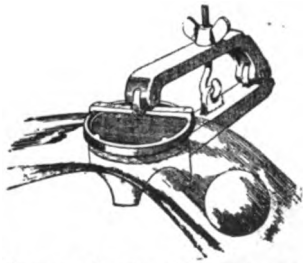

Marvel Junior Vulcanizer

Low Five-Minute Vulcanizer

comprises a screw clamp, the upper jaw of which is supplied as needed by a fresh metal container or heating pan holding the combustible disk which furnishes the heat. This unit is clamped over the repair and the disk lighted, whereupon it burns without flame, furnishing exactly the amount of heat required to vulcanize the patch. The job is completed in about five minutes and the metal pan is then thrown away. For Low's 5-Minute vulcanizer, units are furnished combining both patch and fuel, a molded patch being set into the concave side of the metal paw.

The Tong-em-on vulcanizer resembles a pair of pliers. With it are provided a set of patches, two coppered pans (puncture and blow-

out sizes), fuses and a buffer. The method of application is to roughen thoroughly the surface of the article to be repaired, stick a patch to the bottom of copper pan, remove cloth, and clamp over hole. By sliding back the floating rivet in the slot the tong is kept closed. Two

TONG-EM-ON VULCANIZER

fuses are then put into the pan and lighted with a match. These furnish sufficient heat to cure the patch into place permanently. The article can then be used immediately.

Typical slow-burning compounds are as follows: (1) potasium nitrate 25 gr., gum 20 gr., potassium chlorate 5 gr., charcoal 8 gr., cascarilla 10 gr., ground glass 9 gr., plaster of Paris 10 gr., wood dust 8 gr., Venetian red 10 gr., (2) wood dust 3 gr., potassium nitrate 30 gr., tragacanth 5 gr.; (3) charcoal 224 gr., coarse prunella 256 gr., clorate of potash 32 gr., infusorial earth 16 gr., gum 120 gr., water 5 drams.

ELECTRIC VULCANIZERS

Simplest of all are the electric vulcanizers operated by current from an automobile storage battery or the usual 110-bolt lighting cir-

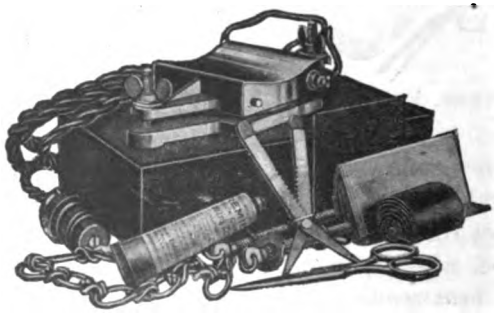

PREMIER ELECTRIC VULCANIZER

cuit. The former are for emergency road repairs, the latter for the home garage only. They are usually supplied with two heating surfaces, one flat for inner tubes and the other concave for casings, together with the usual thumb screw and chain clamps. Some, like the

Corbett-DeCoursey, have a thermometer indicating the temperature of the heating plate so that the current may be turned off at the proper time. Others, such as the Shaler, Six-Volt and Premier, have a thermostatic regulation device which maintains the exact vulcanizing temperature indefinitely, automatically opening and closing the circuit so as to prevent all possibility of overcuring. Shaler electric vulcanizing plants are now available for the professional repair man, and may be purchased complete or in sections as needed.

In repair shops dry heat vulcanizers can be made to do the work very well, but there is some prejudice against them, since they generally require careful watching. The majority of shop vulcanizers are consequently made for steam heat, which can be more easily regulated, and is less likely to burn the rubber.

The Cold Cure

Many find hot vulcanizing too inconvenient, and prefer the various cold cure processes now on the market. With this process, it is generally sufficient to first cement the parts, and when this is dry, to brush the surfaces with the curing solution and then press them together, when the vulcanization is accomplished. The Ara process, most used in England, makes use of a rubber solution in which it is claimed that the rubber particles are surface cured, so that they will adhere and form a vulcanized patch or plug, on being welded by an "extruder."

Self curing solutions are to be found in almost all repair shops and, indeed, are put up in small quantities for the use of motorists in making quick repairs. The basis of the solution is chloride of sulphur mixed with a certain amount of bisulphide of carbon. The whole is based on an old invention known as the Parkes curing process. For temporary repairs, and if handled wisely for permanent repairs also, it is very quick and valuable.

Plug Repairs for Inner Tubes

Some of the earlier methods of this character were based on principles employed in repairing single-tube bicycle tires, to some of which an automobile tire inner tube is comparable. It was mainly due to the French that this application of single-tube methods to motor tubes was made. Some of them merely thrust a thread of rubber, well solutioned, into the hole and clipped it off a little above the surface of the tube; or else they soaked a piece of rubber in gasoline until it swelled and became soft enough to knead like putty. This was rolled to a point between the fingers until it could be thrust through the hole, when the part sticking through was squeezed up against the inside around the

hole, making a rubber rivet, which did good service, if allowed to dry. A patent plugging device consisted of a thin rubber disk with a short, hollow rubber tube projecting from the center. With a piece of wire thrust into this little pointed projection, it could be poked through the hole in the tube, leaving the disk outside. A buckshot was then stuck down into the tube, and this swelled it out until a virtual rivet was formed, closing the hole completely. The Goodrich puncture plug is an improvement of this idea, and consists of a flat disk with a pointed stem coming out from the center and having a little metal ball within the stem, the device having the appearance of a collar button.

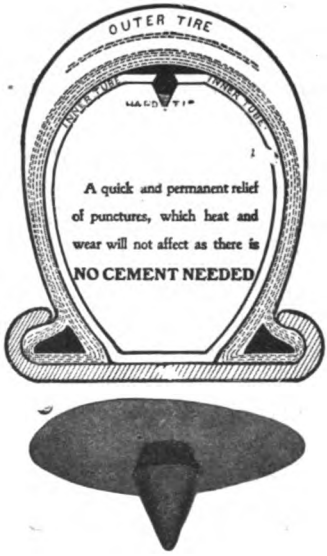

QUICK REPAIR PLUG

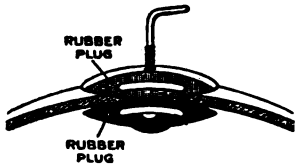

SAMPSON REPAIR PLUG

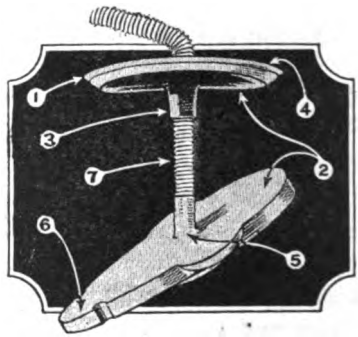

NOKUT TIRE PLUG

Of more recent origin, the Sampson plug is a little rubber covered metal rivet whose two parts are separable but may be drawn tightly together by means of a screw wire through their centers. By stretching the hole in the tube with a pair of treezers, one half of the rivet is inserted through the hole and the other half is then clamped to it by turning up the wire thumb screw, which is then broken off below the surface of the plug. The Spitler plug works somewhat on the principle of two thimbles fitting one in the other. By sticking one through the puncture, pressing the other down into it and fastening the two parts together by means of a screw nut and key, the rubber is nipped around

the hole and the aperture closed effectually, even a hole as big around as a lead pencil.

The following features of the Nokut plug are indicated in the illustration: (1) beveled edge preventing cutting of tire; (2) rubber anchored and chemically welded to metal cores; (3) rubber packing unites cap with base, preventing metal from touching tire; (4) arched cap to conform to tire surface; (5) no open slot to leak; (6) inserting point, with rubber cement, is easily forced into puncture; (7) threaded stem of strong steel so that Nokut rubber can be clamped solidly without stripping stem.

Inner Tube Mastics

Self-curing rubber dough containing chloride of sulphur is used to form patches. There are numerous tire doughs and mastics on the market, English and American, which are usually applied by hand.

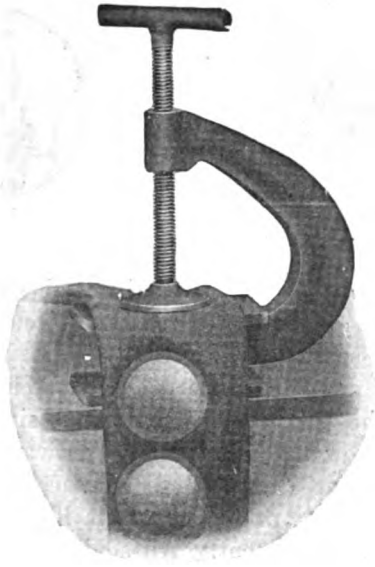

High Pressure Patch Clamp

Magic Rubber Mend and Tire-Doh are American examples of these mastics, while Vulcanizit is a form of self-vulcanizing liquid rubber supplied in collapsible tubes for the same purpose.

A high pressure patch clamp is used in connection with a rubber dough for mending inner tubes called Tire-Sav. A patch of this compound is soft and pliable when applied. The outer edge of the patch

is pressed out so thin by means of the clamp that it cannot catch on the casing and be torn off if the tube should creep in the tire.

Cementless Patches

Cementless, self-vulcanizing patches, now made by most tire and rubber accessory firms, probably furnish the simplest and most widely used emergency repair for all small punctures. They are made in various sizes and consist of a combination of raw gum inner surface with the cement ready applied, and a cured outer covering. To use one of them, the tube is cleaned and buffed around the puncture with emery cloth, the protective fabric is removed from the gummed side of the patch, the cement is softened with gasoline and the patch applied and rubbed down firmly. The heat of the moving tire is sufficient to make

Firestone Repair Patch

Auto-New-Matic
Inner Tube Patcher

a permanent vulcanized repair. Certain of these patches have a tab of the protective fabric extending beyond the circumference of the rubber to facilitate easy separation.

Almost equally simple in use are the patch stocks prepared in sheet form so that they may be cut to various sizes and shapes as required. They are now manufactured under various trade names by several firms. All have a cured outer surface with an inner coating of special prepared rubber, protected with a holland backing, that acts the same as a high grade cement. An acid cure cement is applied to the roughened rubber about the puncture and allowed to dry, when the patch is applied and pressed firmly into place, the tube being ready for immediate use. Even long blow-out rips in inner tubes are effectually mended with such patch stock.

With the Locktite Auto-New-Matic patcher for use with inner tube patch stock the tube is held on a curved rather than a flat surface and the edges of punctures, cuts and blow-outs are prevented from curling under and wrinkling.

United States Government Inner Tube Repair Specifications

Standard practice in emergency inner tube repair is well indicated by the United States Government Specifications which follow:

War Department Standard Inner Tube Repair Kit Directions

For repairing small punctures, use cementless patches. Roughen the tube with sandpaper, then apply cement and allow to dry. Remove cloth from patch and apply. Tube can be used at once.

For repairing blow-outs, use combination repair stock. Roughen tube around cut with sandpaper, then apply coat of cement around cut inside and outside of tube. Allow to dry. Cut piece combination stock 3-4-inch larger in all dimensions than cut and place inside of tube, bringing edges of cut together over center of stock. Apply another coat of cement outside of tube and allow to dry. Cut and place same size piece of combination stock on outside of tube over center of blow-out. Tube can be used immediately.

Note: Always remove cloth from patch and combination stock before applying and place cloth side next to tube.

PERMANENT INNER TUBE REPAIRS

Punctures and Cuts

When a puncture requires a large patch to mend it, more careful work and a longer time are called for in order to get good results. For that reason the repair is best attempted only at leisure in the home garage, and many motorists prefer to entrust the job to a professional tire repair man.

Rubber patching is dependent on the fact that two clean surfaces of crude rubber softened in gasoline or other volatile solvent will stick together. When cement is smeared on any surface the solvent evaporates and leaves a film of crude rubber. Two such filmed surfaces, when nearly dry, will stick together. If they are cold cured they will stick a long time.

The tubes of motor tires are or should be kept covered with talc to prevent their sticking to anything. All tubes are vulcanized rubber, which means that they will be covered, with a thin layer of sulphur, which has oozed or "bloomed" out from within the body of the rubber. This may not be visible, but it is there, and it must be removed with gasoline or emery cloth or both, before the film of crude rubber deposited by the evaporated cement will stick to the tube. If one must choose between emery cloth and gasoline, when removing the sulphur

bloom, he should use coarse emery cloth vigorously, in order to roughen the surface before applying the cement solution. The roughness is almost as important as removing the sulphur and French chalk, because it enables the cement to take a much firmer hold.

Metal inner tube patch buffers, such as the Cordell and Nugent buffers, here shown, are also employed. Small, sharp toothed projections clean the surface and do not cut the tube deeply.

Permanent vulcanized inner tube repairs, as usually done in professional tire repair shops, are made by inserting a patch within the tube and then filling the hole outside. Patching a tube on the inside

CORDELL BUFFER

NUGENT BUFFER

requires greater skill, though an expert can do the job quickly and surely, and the average motorist can soon learn to do as well.

The ragged edges of the puncture are first trimmed smooth with shears. All free sulphur or bloom is washed from the inner side of the tube for a distance of one to two inches around the hole, according to its size, with a piece of muslin dampened in gasoline. A coat of vulcanizing cement is then applied to the cleaned parts and the edges of the hole and allowed to dry thoroughly. It is very important to have good rubber cement, and a thin film of it on the tube will dry more quickly and hold better than a thick one.

A patch to cover the cemented area is then cut of cured black tube repair stock which has one side coated with uncured gum. The coated side is moistened with gasoline to soften it, and on the evaporation of the gasoline the patch is caught in the middle—raw gum side out—with slender pliers and deftly thrust through the hole, manipulating the tube so that the patch fits well up around it. Just before inserting the patch it is well to introduce some talc into the tube to prevent the opposite walls of the tube from sticking to any cemented area not covered by the patch.

After having been set into proper position, the patch is brought into firm contact with the tube by thorough rolling of the latter with a hand roller, the cured side of the patch preventing adhesion to the opposite side of the tube. To keep the patch from wrinkling and the molds from sticking together is the whole thing; and to do this well, the inside patch should not be too large.

The remaining cavity in the tube is then filled flush with a piece of unvulcanized tube repair gum cut with shears to fit. By means of a sharp knife the rough edges are trimmed flush with the surface of the tube and then smoothed with a piece of muslin dampened in gasoline, when the repair is ready to be vulcanized.

The repair is dusted with soapstone and the hot plate of the vulcanizer is covered with a sheet of holland. The repair is then placed on the plate with a block of rubber about the size of the repair directly above it. The pressure bar is then fastened down and the cure allowed to proceed from five to twenty minutes at 50 to 60 pounds steam pressure, according to the instructions furnished with the repair materials used. Ordinarily cure gray tubes for hole repairs 15 to 20 minutes at 50 pounds. Cure red tubes slightly less than gray tubes. Splices and valve pads take about the same time. When the tube is removed from the vulcanizer, the repaired portion is dipped in water and rubbed over with talc previous to insertion in the casing.

In the case of long blow-out holes some repair men prefer an overlapping outside patch to filling the cavity flush. Putting on the outside patch is much simpler than inserting one within the tube, if one is careful to have the surfaces thoroughly cleaned and roughened before the cement is applied. The patch may be cut from unvulcanized tube repair gum, or one of the beveled edge repair patches made by most tire companies in round and oval shapes and several sizes may be employed.

Some of these patches are strengthened with a ply of fabric either in or on the patch, while others have a felt layer acting as an insulator from the heat generated by the tire in use. It should be abundantly large, covering a good margin around the hole. When the patch is put on it will stick at the least touch, so it must be held in the position it is to take before being laid down, and then well rolled to drive out all air bubbles and bring the surfaces into close contact. Any upcurled edges should be stuck down tight or trimmed off, and the edges of a patch cut from repair gum should be beveled to prevent the patch from being torn off by catching in the shoe. Such a patch should hold perfectly when vulcanized under pressure.

If a puncture is very small, such as that made by a pin or tack, it is usually patched in professional repair shops by merely placing two plies of outside gum over the puncture, (the tube having first been cleaned and cemented,) and curing in the usual manner.

Splicing Inner Tubes

When a tube has been so badly injured by a blow-out that patching is inadvisable, it can be repaired only by cutting out the entire damaged portion of the tube with shears and inserting a new section taken from another damaged tube of the same size. The section to be inserted should be five inches longer than the damaged section cut from the tubes, allowing 2 1-2 inches at each end for the splice.

One end of the tube is put through the smaller of the two splicing mandrels and turned back on the mandrel five inches and then forward again 2 1-2 inches, making a double lap. One end of the tube section to be joined is put through the larger splicing mandrel and turned back 2 1-2 inches. Both tube and section are tapered at the edges with a thin, sharp knife to ensure a smooth splice. The surfaces to be joined, which are the outside of the tube and the inside of the tube section, are roughened with a wire buffer or hand buffing brush for 2 1-2 inches back from the ends, taking care not to break through or damage the rubber. All rubber dust is then washed off with gasoline and the cement applied. One heavy coat or two lighter coats of acid vulcanizing cement are given, allowing the cement to dry thoroughly after each application. Ten or fifteen minutes may be sufficient for the first coat, but the second will require thirty minutes to an hour.

The two splicing mandrels are brought together, the smaller within the larger. Acid curing solution is applied with a wide soft brush to the cemented ends of the tube and tube section, and the lap of the tube section on the larger splicing mandrel is quickly drawn over the cemented portion of the tube on the smaller mandrel. The splice is then wrapped tightly with strips of inner tubing, preferably bicycle tubing, and kept under this pressure for 15 to 20 minutes, which is sufficient time for the curing solution to form a solid union. The parts must be joined while the acid is still wet or there will be no vulcanization.

The free ends of the tube and tube section are then joined in the same manner, care being taken that the tube does not become twisted when making the final splice. Slits lengthwise of the mandrel enable the mended tube to be removed through them, and after inflation and testing under water the tube is ready for use.

A well-known tire repair expert describes the following simple method of splicing tubes which can be worked very satisfactorily without the use of a mandrel or acid, which requires very fast work to accomplish results.

To splice a tube or put in a section, allow about two and one-half inches at each end for lap. Clean one end on its outside surface for a distance of two and one-half inches. Take the other end of the splice and double back for two and one-half inches. Clean the exposed surface.

Cement each part thoroughly and allow to dry. Take hold of both ends of the splice, being careful that the tube is not twisted. Place the end that is doubled back just over the other end of the splice, which should first be dipped in gasoline, and roll the doubled end over the other, so that the cemented surfaces come together. Work until the splice is smooth and the gasoline dry. Taper the exposed end with a knife or emery, cement and cover with a strip of outside tube gum. Cure on a tube plate by making three cures with a block wide enough to cover all of the tube except the edges.

Applying Valve Bases

If the puncture or blow-out is very close to the valve stem, it may be necessary to remove the valve in order to make the patch. Do this by removing all the fittings and forcing the valve back inside the tube. If the tube has an outside valve base, remove and replace later with cold cement. This valve base can usually be removed easily by heating a little, base side down under pressure, on the tube plate.

Both the tube around the hole and the base to be applied are roughened thoroughly with a wire buffer, and the roughened surfaces cleaned with gasoline. One heavy coat or two lighter coats of acid curing cement are applied and allowed to dry thoroughly. The first coat will require 15 to 20 minutes and the second may require 30 minutes to an hour.

Acid curing solution is then quickly applied to the cemented portion of the inner tube and the valve base promptly placed in position and rolled down securely with a hand roller, care being taken to secure the edges carefully with a rotary stitcher for a few minutes. Finally the valve is forced back through the hole and the fittings replaced and screwed down tight, but not tight enough to cut into the tube.

If the tube leaks around the valve stem in such a manner as to make a repair difficult, remove the valve and base as explained above and repair the valve hole as if it were an ordinary blow-out. Cut a

small hole in another part of the tube and force the valve out through it. Apply a new valve base with cold cement and re-apply the fittings. If no ready-made valve bases are at hand, make one out of a ply of thin fabric and rubber.

CHAPTER XLI

FABRIC TIRE REPAIR

THE repair of tires naturally divides itself into three distinct classes—preventive measures, road repairs and shop repairs. The two former are for the most part temporary to meet an emergency and are made by the motorist. The latter are permanent and usually made by the professional repair man, although some motorists do most of their own repair work, unless the operation be of a major character requiring special machinery and equipment.

The Business of Repairing Tires

The business of repairing tires has developed in recent years into an industry of tremendous proportions. There are already some 25,000 tire vulcanizers in the United States and the number is constantly increasing. With nearly 40,000,000 tires in use the field is a lucrative one for the efficient, experienced, conscientious man.

Tire Repair Schools

Many prominent tire men believe the time is not far distant when it will be necessary for tire repair men to show proof of training and study under competent authority. Already there are being operated in Akron, Ohio, a few tire repair schools, conducted by the tire manufacturers. One institution has averaged 35 graduates a month since the summer of 1919 and the size of the school is to be doubled.

Every graduate receives a diploma certifying that he has finished the regular course of instruction, consisting of lectures, text-book study, and practical repair work. The student is first made thoroughly acquainted with the details of tire construction before he is actually trained in repair work. Repair stocks, fabrics of all descriptions, air bags, vulcanizing machines and methods, common sources of tire trouble, etc., are among the subjects taken up. The chief instructor and his assistants in the school are thoroughly experienced tire men from both the factory and retail business standpoints.

Because of the great demand for the training, the course has been made as brief as is consistent with turning out expert tire repair men. It is said that the average man can complete it in a month. Some, however, require longer training. None is given a

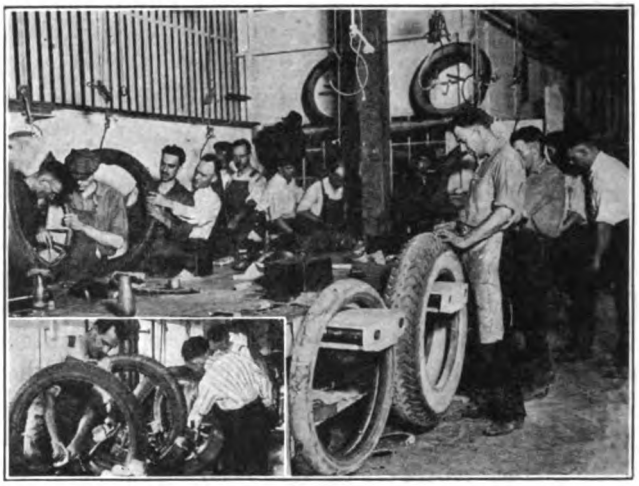

A School for Tire Repair Men

diploma until his work has passed the necessary high average standing. The wide interest taken in the school is evidenced by the class roll which shows students from nearly all of the states in the union.

PREVENTIVE MEASURES

Plastics for Casing Cuts

The majority of tires are never worn out, but go to pieces from the effects of water and grit which work into the carcass through small cuts in the rubber and rot and grind the fabric. Certain of the tire doughs or self curing cements made by most tire and many accessory firms are specific for this particular trouble.

The cut to be filled is washed out with gasoline and an acid cure cement applied. When the cement is dry a small piece of the plastic is kneaded between the fingers and the cut filled with it. The action of the air will thoroughly cure the repair, and if made at night will be sound and serviceable the next morning.

Rubber Preservatives

Even the numerous tire paints or rubber preservatives, while intended primarily to counteract deterioration by oxidation, are of value to a degree in this connection. These liquid compounds applied with a brush to the outside of the tire not only give it a new appearance but fill cuts which, if allowed to go unattended, might later cause trouble. They also waterproof exposed fabric and prevent decay.

Tire Saver and Repair Kits

Most of the larger rubber companies now offer their patrons compact quick repair and tire saving kits which include tire plastics and plasters together with various first-aid materials for emergencies.

A quick repair outfit of this sort usually contains a can of tire putty, a can of patching cement, a blow-out patch and an assortment of tube patches. A tire saving kit comprises a can of tire putty, a can of patching cement, a roll of friction repair tape, valve insides, a tube of French talc, a pressure gage, a rim cut patch and a blow-out patch.

Tire Plasters

Frequently the disintegration of tires is also aided from within by the pressure of the inner tube forcing its way farther and farther into any fabric break or cut extending through the tire carcass and eventually causing a blow-out. These damaged places, however small, should be immediately protected inside the casing by applying a tire plaster, obtainable in several sizes of any tire house. Such a plaster consists of layers of frictioned fabric plied together and sometimes backed with flannel to prevent chafing of the inner tube, its face being coated with an adhesive self-vulcanizing compound. To apply it, one has only to remove the protective fabric, moisten its face with gasoline and press it firmly over the break in the inside of the casing, where it will adhere securely.

ROAD REPAIRS

Blow-Out Patches

Though avoidance of mishaps should be the motorist's most profitable study, the time comes when he must deal with minor tire troubles. Blow-outs are a source of much trouble and the hardest repairs to make. It is generally beyond the power of the motorist to handle a blow-out adequately, though there are several excellent makeshifts, such as blow-out patches and tire sleeves or boots, by means of which he is enabled to reach a repair shop if he carries no available spare tire.

A fairly intelligent person can soon learn to mend a puncture so that it will hold for a good while. This class of motorists really forms the main dependence of the automobile trade, and so all the great tire companies endeavor to teach their patrons the details of tire mending and send out repair circulars to attract others who might be persuaded to go in for motoring if assured against heavy repair bills.

Permanent Tire Casing Repairs

Careful inspection is the first essential. To inspect the inside, spread the beads apart (with a good pair of tire spreaders, if the beads are stiff) and look closely for fabric breaks, checked fabric, separated plies, loose cords, etc.

By flexing the beads one may find whole or partial rim cuts or broken beads. Flexing the tread or hinge point (below the edge of the tread) may disclose tread cuts, worn tread, punctures, separated treads, etc. Look the entire casing over carefully for unnatural tread wear, fender cuts, side-wall cuts, chain wear, etc.

Repairing Treads. Cuts in the rubber tread are most effectively repaired by skiving or beveling the tread to a feather edge with a sharp knife around the injury, filling with repair gum and vulcanizing. After beveling, the face is buffed with a wire brush and then washed with gasoline to remove all buffing dust. Two or three coats of vulcanizing cement are applied as needed, each being allowed to dry separately, the first coat or coats from 20 minutes to one hour and the last coat from two to five hours. The cavity is then filled flush with the tread surface by means of strips of unvulcanized tread gum of proper color to match the casing, the surplus rough edges being trimmed off even with the surface of the tread. When the fabric as well as the tread has been pierced, as by a large nail for example, the hole should not only be plugged, but a piece of frictioned cloth of generous size should be stuck over the hole on the inside. Finally the repair is cured, usually in a cavity vulcanizer, according to instructions accompanying the tread gum used. Typical cures are 45 minutes at 50 pounds steam pressure and 50 minutes at 40 pounds pressure.

Mending Sand Boils. Sand boils and surface cuts which only penetrate one or two layers of fabric are not very hard to mend. They are caused by small stones and sand working through the tread and separating it from the carcass, thus forming a loose place which constantly enlarges as the gravel accumulates.

To repair a sand boil, all of the loosened rubber is removed down to the fabric with a sharp end-cutting knife, the edge of the cavity thus formed being beveled. If the canvas is injured, the casing is turned inside out and a stepped-out repair made, as will be described in the following section. The outside of the exposed carcass area is then thoroughly buffed and washed with gasoline. When quite dry, three coats of vulcanizing cement are applied, the first two coats being allowed to dry 30 or 40 minutes and the last coat over night. A strip of cushion and cement stock about ¼-inch wide and of sufficient length

to encircle the hole is applied to the exposed edge of the old tread stock in order to guarantee a close connection between the newly applied and the old tread stock. Small pieces of tread stock the proper size and shape to fit the cut-out section are then cut and applied one layer at a time until the repair is slightly higher than the rest of the tire. After rolling firmly into place, the edges are trimmed and the repair is cured in a sectional cavity vulcanizer.

Mending the Fabric

Stepped-Out Repairs. A cut or fabric break not over 2 inches in length but affecting most or all of the fabric plies requires stepping out and building up with new fabric on the inside in addition to mending the cut in the tread, the casing being turned inside out to facilitate the process. The inside is the proper place to make fabric reinforcements, as the strain upon the patch is much less and the repair more efficient than when made from the outside. If a casing is made with five layers of fabric, only four are cut away; if with six layers, only five are cut away, and so on. Each ply of fabric is stepped out, the knife being held in a slanting direction, almost flat, and with the point of the blade towards the break. Care must be taken to cut only one layer at a time. One corner of the section to be removed is then lifted up and the whole pulled away with canvas pliers. Each subsequent section removed is smaller than the preceding one. The smallest section should leave a 1 or 1½-inch step all about the break and this should preferably be the width of all the other steps. The greater the number of plies of fabric the narrower these latter steps may be, but ½-inch should be the minimum.

The steps are all brushed with a hand or revolving wheel roughening brush to remove all the old rubber and expose the actual texture of the fabric. Two or three coats of vulcanizing cement are then applied as needed, each being allowed to dry separately, the first coat or coats from ½ to 1 hour and the last coat from 2 to 5 hours. As some fabrics will absorb the cement more readily than others, enough must be applied to form a film or rubber on the surface. A longer time is required for drying in cold damp weather than in warm dry weather. The casing is then turned right side out.

When the cement is thoroughly dry the stepped out area is ready for building up with new fabric. A piece of thin cushion stock, sometimes called cushion and cement gum, 1/32 of an inch thick is first applied and well rolled down with a wide roller so that the impression of the steps may be clearly seen, the casing remaining turned

back in its normal position meanwhile. The job is then ready to receive the rebuilding fabric, frictioned on both sides and skim coated on one side and corresponding in weight to that of which the casing is built. The prepared fabric is obtainable in 8, 10, 14, 16 and 17½-ounce weights, the latter being most commonly used for automobile tires.

A piece of fabric, cut on the bias at an angle of 45 degrees to conform to the construction of the casing, is now stretched out and cut with shears to form patches fitting each step-out. A repair made of fabric cut on the straight becomes hard and often bulges. New fabric has some stretch in it that must be taken out before applying, so that the new fabric will conform to the old fabric which is to remain in the rebuilt section. For this reason pulled fabric from old tires is much used by repair men.

It is necessary to start with the smallest patch and build upwards. This is held lightly in the hand and folded across so that the fold will come in the center of the damage. It is then rolled down, commencing at the center and rolling toward the sides to exclude air that would form blisters. Each layer is proceeded with in the same manner, the utmost care being taken that the new fabric is a perfect fit and joins closely the edges of the old. The final layer of fabric should extend 2 inches beyond the last step-out all around. For added security, in case of a rather bad break, the last patch may well be wide enough to extend to the toe of each bead and long enough to extend 2 inches beyond the last step-out. The repair is then ready for curing with an inside patch vulcanizer.

In this and all other carcass repairs the fabric of the casing must be thoroughly dry before proceeding, or fabric separation may result. An inside patch vulcanizer serves as an excellent drier.

Inside Fabric Repairs

A cut not over 2 inches in length, or a stone bruise involving not more than two piles of fabric is reinforced by inserting an inside sectional repair. Some repair men employ a two-ply sectional reline, although it is not as satisfactory.

Stone bruises are broken or strained places in the fabric, caused by striking a stone at high speed, when the tire is blown too tight to yield instantly. In such cases the fabric may be strained or partly broken, without actually tearing the tread rubber, so that the driver is not aware of the injury until the tire bursts later on, perhaps on a perfectly smooth road.

Two plies of fabric are stepped out for a distance of 5 inches at each end of the injury, removing the first ply half way around the bead and the second ply only to the toe of the bead. To do this, the bead or chafing strip is first loosened back to the heel of the bead. The exposed fabric and the inside of the casing for a distance of two inches beyond each end of the stepped-out area are buffed, washed with gasoline and treated with two or three coats of vulcanizing cement as needed, each coat being allowed to dry separately. Two plies of rebuilding fabric corresponding in weight to that of the tire and cut on the bias are fitted accurately to the stepped-out space and rolled down, the inner layer being carried to the toe of the bead and the outer layer being carried around the toe of the bead as far as the cut-down extends.

Over this is applied a two-ply fabric patch stepped one inch and with clipped or rounded corners, the outer layer being two inches longer at each end than the fabric stepped out of the casing but not extending closer than ¼ of an inch to the toe of the bead. The bead or chafing strip is finally rolled down into position and the repair cured on an inside patch vulcanizer.

A well-known tire repair expert describes a simpler and quicker method as follows:

Fabric breaks going through not more than two plies may be repaired by the inside method of applying two or more plies of fabric and curing on the inside vulcanizer.

Allow the widest ply of fabric to extend from bead to bead and about four inches beyond each end of the check or break. The other plies should be one inch narrower all around.

First clean the tire casing inside, washing it free of bloom with gasoline, and buff about five inches beyond each end of the break, from bead to bead.

Clean the inside of the casing and apply at least two coats of cement, the first coat light, the second, heavy. If the cement is of a nature to require more than two coats, give it a light third coat. Allow the first coat to dry thirty minutes, the second one hour, and the last from three to five hours.

If old fabric is used, skive the edges so they will make a smooth job and not chafe the tube.

Fill up the break with cushion gum and run a layer of cushion about ½ inch wide around the edge of the break. Stitch in the shoe or plies, beginning with the narrowest and cure on the inside vulcanizer or in the section mold.

Repairing a Small Blow-Out

The tire repair expert just quoted gives the following detailed method of repairing an ordinary small blow-out by the inside method.

The inside method should be used in repairing blow-outs when the injury is not too near either bead and sufficient purchase can be obtained by allowing the widest ply to extend over the bead.

Naturally the inside method is most economical both in labor and material, and does not give a repaired appearance to the casing.

Of course the inside method should never be used when the tread is gone at the point of repair and the outside plies are so badly worn or broken that to remove inner plies would take out the best plies of the tire.

The number of plies to be removed is determined by the size of the casing and extent of the injury. Up to 4-inch tires, two plies are all that is necessary; above this size, three plies, but this is largely a case of judgment as to the strength needed.

The first step should be two and one-half inches from the edge of the blow, and each successive ply, one inch further. When the last ply is removed, clean and buff the inside of the casing and apply at least two coats of cement, first coat light, second heavy. If the cement is of a nature to require more than two coats, give it a light third coat. Allow each coat to dry thoroughly.

Fill up the break with cushion gum and run a layer of cushion about one-half inch wide around the edge of the break.

Fill in each ply of fabric, lapping about ⅛ of an inch. Add one or two plies more than were removed, and on large blows or when close to one bead, lift the chafing strip and lap the last ply across the flap part of the bead.

Sectional Repairs for Blow-Outs

Blow-outs and large ruptures affecting several plies of fabric call for a sectional stepped repair by the outside method. Blow-outs are always serious, and should be repaired as soon as possible, since the trouble will increase rapidly, no matter how well the wound is wrapped up. Although the task is a difficult one and rarely attempted by other than professional tire repair men, not only are bad blow-outs mended but tires can be retreaded in whole or part and fabric can be built in until the mended tire is nearly as strong as before.

When only part of the plies have been injured, all of the injured plies should be removed. When all the plies have been injured, all plies but one must be removed. Unless this is done the ruptured ends

of the fabric will chafe through the inserted plies when the casing is put into service. One ply is removed from the inside and the others from the outside of the casing, the next to the inner ply being retained as a foundation on which to build.

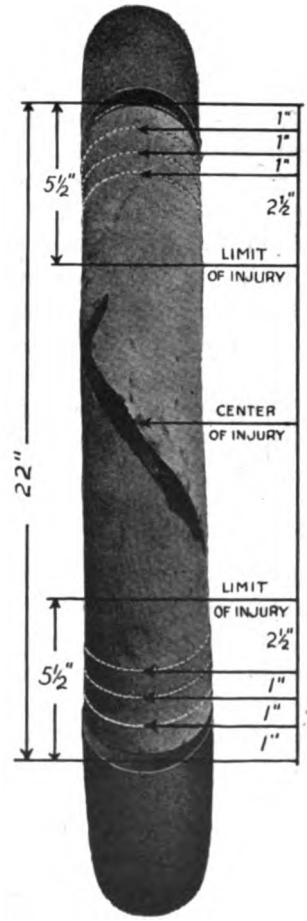

(The B. F. Goodrich Co.)

A Sectional Repair

To prepare a 5-ply fabric tire for sectional repair, all the rubber is first removed from the outside of the casing, including the breaker strip and bead or chafing strip at least 5½ inches beyond each end of the injury. As the steps will be one inch wide, this distance is measured in from each end of the exposed fabric and with a fabric

knife the first ply only is cut down to the toe of the bead on each side and entirely removed from the beads and casing with a fabric hook. One inch farther in toward the injury the second ply of fabric is cut and removed to the toe of the bead, likewise the third ply, except that it is removed to the center of the bead only. This step should be at least 2½-inches from the ends of the injury. One ply is then removed from the inside of the casing to the toe of the bead on each side and measuring back one inch farther at each end than the rubber tread was removed from the outside, making the inside ply two inches longer than the longest outside ply.

Only two plies are removed from the outside of a 4-ply casing and one from the inside. The incision in the tread should be 4½ inches from the limit of the injury. Three plies are usually taken from the outside of a 6-ply casing and two from the inside. The outside measurements are the same as for a 5-ply casing, but an extra inch at each end must be allowed on the inside for the removal of the second ply.

Both cut edges of the rubber tread and side walls are next skived or beveled and buffed with a rotary wheel or hand wire brush until well roughened. The exposed fabric, both inside and out, is also buffed lightly to remove all old adhering friction. As the least moisture in the fabric will cause separation of the plies, the casing is now dried thoroughly in an inside patch vulcanizer, or preferably for two hours in a small room or box properly ventilated at a temperature of 150 degrees dry heat.

After the casing has been dried thoroughly and washed with gasoline, two or three coats of vulcanizing cement are applied as needed, each coat being allowed to dry separately. The casing is then placed on a tire form and bound if necessary to hold it firmly and retain its shape.

The edges of the fabric steps are now covered with strips of cushion gum 1/64 or 1/32-inch in thickness and about 1/2-inch wide to keep these edges from chafing in the rebuilt section. Some repair men prefer a single strip of cushion stock four inches wide and as long as the entire stepped out area rolled carefully into place. It is also of vital importance to cover the edges of the injury and to fill the hole in the ruptured fabric with the same gum.

The fabric that has been removed is then replaced with new body fabric of proper weight frictioned both sides and skim coated one side, cut on the bias and stretched out to conform to the old fabric which is to remain in the rebuilt section. Each ply of fabric is applied in

proper order, taking care that it fits and butts evenly with its step and is rolled down firmly. Some repair men allow each ply to lap about ⅛-inch so that when the air bag is inflated during the cure it will set the plies in their proper places. The third ply extends to the rubber on the carcass of the casing, but at the beads is butted the same as the other plies and so corresponds to the length of the fabric removed.

The casing is now removed from the form and hung conveniently over the work bench so that the casing just touches the table. Spreaders, tire jacks or "reversers" are inserted beyond the ends of the repair to hold the beads apart, and the steps and edges of the injury on the inside of the casing are covered with cushion gum as already described for the outside. The stepped-out ply or plies of fabric are replaced with body fabric carefully butted at the steps and rolled down firmly. To reinforce the inside, one extra ply of fabric extending two or three inches beyond each end of the repair is inserted.

The casing is finally hung over the work bench leaf or pins with a form inside and the bead or chafing strip replaced with an eight-ounce frictioned fabric, lapping it one inch on the outside and 1½-inches on the inside. The side walls are replaced with unvulcanized tread gum of proper color and thickness—usually 1/16 or 3/32-inch —rolled down and skived or beveled at the edges so that it will taper evenly under the tread. Care must be taken to keep the gum above the bead far enough so that it will not overflow into the clinch while being cured. The tread is then filled with strips of tread gum of proper color, each piece being carefully rolled down as applied and all blisters removed by pricking with an awl. To bind the plies firmly together, a stitcher is used freely around the edges. The job is now ready to cure in a sectional vulcanizer.

Non-Skid Designs on Sectional Repairs

By the time the average tire requires an outside sectional repair its non-skid tread has usually worn down until it more nearly resembles smooth tread. When a nearly new tire must be so repaired, however, and it is desired that the repair shall correspond to the rest of the tread, an extra layer of tread stock is applied and design molds made use of in curing.

Design molds may be obtained by the use of either plaster of Paris, or of tread stock and single friction.

The mold in which the tire is to be cured is coated ¼-inch deep with plaster of Paris cement while the mold is still cold. That por-

tion of the casing having the best tread design is set up in the mold and held there with a pad and two clamps for fifteen minutes, after which it is removed and the impression allowed to set over night. The casing to be repaired is then set in the mold so that the new stock comes in contact with the design and the cure is carried out in the usual manner.

To make a tread design mold by the other method, a piece of single friction fabric and two layers of tread stock are cut to a size that will extend some two or three inches beyond each end of the repaired section, and also over the tread to the point where it terminates on the side wall of the casing. The three are rolled firmly together and the pad, after soapstoning freely, is laid gum side down over that portion of the casing where the non-skid tread shows the least wear and fastened with a string at each end around the tire. The casing is then placed in the mold of a cavity vulcanizer with a sectional air bag inside and given a 40-minute cure under the regular heat, after which the negative impression will be complete.

When the repair is ready to vulcanize, soapstone the raw section, then take the pad and apply a coat of self-curing carbon cement around its edges. Fit the pad carefully over the section, where the cement will hold it. The lap at either end will serve as a guide in putting the pad in place. Then curve in the usual way. The raw gum in the section will fill out the pattern and the finished repair will match the tread to perfection. Either process is very simple, but some care is necessary in building up the section so the gum will not overflow, and in fitting the pad over the portion repaired.

Repairing a Large Blow-Out

The tire expert previously quoted describes in detail the following method of repairing a large blow-out by the outside method.

On repairs that an inside section will not give sufficient strength, employ the outside method.

First determine the number of plies of fabric to be removed by the following table:

If the casing has 4 plies, remove 2 plies
If the casing has 5 plies, remove 2 plies
If the casing has 6 plies, remove 3 plies
If the casing has 7 plies, remove 3 plies
If the casing has 8 plies, remove 4 plies

To determine how far each way to remove the side wall rubber and to peel back the tread, measure 4½ inches from each edge of the

break, when two plies are to be removed; 5½ inches for three plies; 6½ inches for four plies.

Cut the side wall rubber down to the fabric on each side of the tread, just below the breaker and make a "lay-back" of the tread by cutting across, lifting up with a screw driver and peeling back the tread and breaker. Hold the tread back by means of double pointed hooks made of soft wire. If the tire is to be retreaded, peel off the tread entirely. Cut down the side wall rubber where marked, taking care not to cut the fabric. Cut inside of this about one inch and peel off the strip of rubber.

Now, with the notched knife cut one ply of fabric from toe to toe of the bead ½ inch from where the side wall rubber was removed, and by lifting up with a screw driver at the corner, peel off the section of fabric with pliers.

Cut the next ply on a margin of one inch from the first cut, and if more plies are to be romoved have a one-inch margin for each succeeding ply. The last ply taken out should be two inches from the edge of the blow-out.

If the cut is very large or in the center of the tread, go over both beads; if it is on the side, go over one bead and to the opposite side of the tread, below the flexing point of the tire.

Buff all parts of the casing inside and out, bevel the old rubber and buff the under side of the tread.

Wash with high-test gasoline and give three coats of cement, first and last light, second heavy. Allow each coat to dry thoroughly. Cover with cushion stock outside, roll and prick out all air bubbles.

Replace removed plies of fabric with new plies, lapping the joints of each ply ⅛ of an inch. Allow the last ply to go over the toe of the bead and lap inside one inch. Replace the chafing strip, lapping one inch up on the side wall from the heel of the bead and ½ inch inside.

Replace the side wall with one ply of 1/16 stock ½ inch above the crotch of the bead and up to the tread. Apply a strip of cushion on the edges and replace the tread, rolling down securely. Fill in a strip of 1/16 stock at the tread if the thickness of the side wall makes it necessary. Fill in the splice of the tread with one ply of cushion and the balance with tread stock. Skive all rough edges. Fill up the cut with cushion inside of the tire and put a three-ply shoe inside. Be sure the shoe laps about 1½ inches beyond the widest ply of fabric outside and extends from toe to toe of the bead.

When a casing is ready for curing, open the escape valve at the end of the mold to be sure of dry blue steam.

If the tread is all intact, pack it with a soapstone mash or wood pulp and plaster of Paris mash to keep from flattening out the anti-skid design.

Before inserting the air bag in its proper place inside of the casing, soapstone the inside of the casing freely to prevent the air bag sticking to the repair. Regardless of the number on the air bag, take particular care to see that the size of the bag is neither too large or too small. Should it be too small and the next size too large, it will be necessary to pad out with plies of rubber or old fabric. A little experience will soon teach one when an air bag fits a casing properly.

If a tire is a clincher, place the bead molds over the beads at the section that is to be repaired, dividing the molds up equally on the repair. Dust soapstone into the mold and on the tire to prevent sticking to the mold.

Then place the tire into the mold, adjust the cavity clamp and tighten it down until the bead mold fits snugly on the tire. Then inflate the air bag from 65 to 80 pounds and cure as recommended for the stock used.

To remove the casing from the mold, first release the air from the bag, then loosen the cavity clamps, and if the tire is of the clincher type, lift the tire and bead plates from the mold together.

In placing a straight-side tire in the mold and removing it, the bead plates may be placed on the tire after the tire is put in the mold and removed before taking the tire out of the mold.

A piece of old flap used on top of the air bag where the bead molds come together will add greatly to the life of the air bag.

Always use the same size air bag in a certain size and style of casing for best results. Use one air bag for straight-side, and another for clincher casings. Allowing the air bag to remain in the same shape all the time increases the life of the bag.

The air bag should be two inches shorter than the cavity of the vulcanizer in which it is used.

Always discharge air from the air bag before loosening the clamps or removing it from the tire. Never handle the air bag by its stem.

Strengthening Rim Cuts

To repair a rim cut, the old side wall rubber is removed together with the chafing or bead strip up to the edge of the tread. These can be removed in one operation. One ply of fabric is stepped down the length of the cut and to about half an inch below the edge of the tread, and removed down to the toe of the bead. The exposed areas

are washed with gasoline and two or three coats of vulcanizing cement are applied as needed, permitting each to dry separately. The inside of the casing from bead to bead and the length of the cut is also buffed, washed and cemented. When the cement is thoroughly dry the stepped-out fabric is replaced with body fabric frictioned both sides and skim coated one side. This is overlapped to the gum about ⅛-inch and extended around the bead and inside the casing about 3 inches. The repair is next reinforced on the inside of the casing from bead to bead with one ply of body fabric. The chafing or bead strip is then replaced with light bead fabric. The removed side wall is replaced with unvulcanized tread gum of proper color and thickness—usually 1/16 or 3/32-inch—rolled down securely, the rough edges being trimmed with a sharp knife. Finally the repair is cured in a cavity vulcanizer according to directions accompanying the tread stock used.

The tire expert previously quoted describes his method of repairing a rim cut as follows:

When a tire is rim cut for a distance which would mean not over two cures in the section mold, it is worth while to repair it. However, if it shows it is about ready to give way in other parts, it is useless to make the repair, as the mileage obtained would not justify the cost.

The same method of stepping out is employed as that explained for the outside method of repairing blow-outs, except that the plies are removed only from the bead to the edge of the tread and a safe margin left for laps.

When ready to build up, replace with new fabric the same as removed, except that one or two plies (according to the size of the tire) should extend over the toe of the bead and near the center of the tread on the inside of the casing. If two plies only are removed, in replacing them, stop one at the toe of the bead and the other at the center of the tread.

Stopping plies in the center of the tread prevents hinging and consequent failure of the repair.

It is always best to use regular fabric in repairing rim cuts in cord tires, as the fabric acts as an anchor strip. Under no condition, however, is regular fabric recommended in repairing blow-outs except as an anchor strip.

Relining

A tire casing in good condition on the outside, but unsafe for use because of fabric breaks on the inside, will often render consider-

able additional service by relining all around. One of the many prepared tire protectors of proper size may be used, or a reline may be made of ordinary rebuilding fabric cut on the bias. If the breaks are small, one ply of fabric will be sufficient; but if the fabric is broken all around, two or three plies are necessary. The inside of the casing is first buffed and well brushed out to remove all talc and other foreign material. Two or three coats of vulcanizing cement are then applied as needed, each coat being allowed to dry separately. Finally the relining is applied and rolled down from the center toward the bead to smooth out all wrinkles and avoid blisters. The prepared tire protectors should also be cemented into the casing, using a self-vulcanizing cement. If put in loosely they are apt to chafe the inside of the casing, causing more rapid deterioration than would otherwise be the case. Reliners of any sort are detrimental to new tires as they reduce resiliency and create heat, which is not only destructive to the fabric but weakens the adhesiveness of the rubber between the plies of fabric.

Vulcanizing Fabric Repairs

All inside fabric reinforcements, both stepped-out patches and inside sectional repairs, also outside sectional repairs, must be vulcanized before retreading the casing. For inside reinforcements an inside patch vulcanizer of proper cross section is used. These vulcanizers have a triangular rag tightener operated by a screw or screws. Both the vulcanizer form and the repair inside the casing are first soapstoned freely. The casing is then placed over the form, with the rag tightener loosened, and is cross-wrapped securely with a damp strip of eight-ounce fabric or heavy muslin 2½ inches wide. By means of the screw or screws the triangular clamp is then tightened to place the cross-wrap under greater tension, when the repair is ready for vulcanizing according to the instructions furnished with the rebuilding fabric used.

For outside sectional repairs a cavity sectional casing vulcanizer is required. Such an equipment, together with an assortment of bead molds for straight-side, clincher and double clincher tires will handle any casing from 2½ or 3 to 5 or 5½ inch. The sectional mold and the repair, both inside and out, are first soapstoned freely. A sectional air bag of suitable size is placed inside the casing to keep its shape while baking and a thin strip of damp muslin as wide as the tread is applied to the outside over the repair.

Asbestos paper is laid over the tire and cut through to expose the built-in part only, so that the rubber tread surrounding the repair will

not be overvulcanized. The proper bead molds are fitted into position and held in place with clamps, unless the molds are of the bolted together type, when clamps are unnecessary. The casing is then placed in the proper cavity of the vulcanizer; the bead mold is screwed together until tight; the air bag inflated to 70 pounds pressure, and the repair is cured according to the instructions furnished with the rebuilding fabric used.

Practical Vulcanization Hints

Vulcanization is such an important part of tire repair that tire manufacturers not only give the clearest possible instructions regarding it, but frequently publish many practical supplementary hints. The following helpful suggestions have been gleaned from many sources of this character.

It is very important that the heat be of proper temperature, the equipment conveniently arranged, and the steam supply and drainage pipes properly connected. When installing a vulcanizing equipment, a steam fitter is often called in to do the work, and not being familiar with the requirements for vulcanizing rubber, pipes too small for both supply and drainage are often used. Too much condensation is the result and owing to the limited supply, steam is moist when delivered to the vulcanizer.

On account of the difference in the temperature of steam, even when the steam gauges on several vulcanizers register the same number of pounds, a thermometer is most dependable. Steam gauges get out of order and do not invariably register the pounds pressure accurately.

When starting the vulcanization of any repair work, particularly kettle or pot-heater cures, do not turn on the full steam pressure too quickly. Open the valve just a little, so that it will require from 12 to 15 minutes for the steam in kettle or heater to run up to the desired pressure. Vulcanization of rubber will not take place until the stock has been heated to a degree sufficient to melt the sulphur in its composition. The preliminary heat suggested does not start vulcanization but warms the stock all through, and afterwards when the full steam pressure is turned on the vulcanization is uniform, i. e., in the stock underneath and toward the tire as well as the material on the surface in direct contact with the steam or heat; while on the other hand, if the high pressure is turned on quickly, the surface rubber in direct contact with the heat starts vulcanization, forming a crust which prevents the heat from working down to the stock underneath, and

retards its vulcanization. If the heater be close to the boiler, be careful at all times not to open the steam valve too wide, particularly when the boiler is small and the heater large, or when there is considerable steam pressure on the boiler. A large heater will sometimes syphon the water out of the boiler if this valve is opened too quickly, especially when there is a high pressure of steam on the boiler.

Some tires, especially old ones, will at times stick to the mold after vulcanization. This usually can be avoided by thoroughly soaping the mold before use. Some advocate cocoa butter instead of soft soap. The mold is first cleaned thoroughly with fine emery paper. Then after allowing it to warm up a little, it is gone over with a piece of cheese cloth saturated with cocoa butter, then wiped until glassy and soapstone applied.

To bake good bread, it is necessary first to have the oven hot, maintain a uniform temperature, leave in the oven long enough to bake thoroughly, but not too long to burn. The same applies to the vulcanization of rubber.

The most simple physical test for determining whether the rubber of a repair is under-cured or over-cured, is to cut out a strip of the new rubber, cut lengthwise through the center of this strip, and one piece after tension or stretching should recover to almost its normal length, the variation depending upon the width and length of the strip tested. For example, if the strip be one inch wide and four inches long, cut it lengthwise through the center; after reasonable tension or stretching of one strip, it should recover to a length of 4⅛ inches or not more than 4¼ inches. If it does not do this, or has a tendency to curl up, there is an indication of under-cure. If, when submitted to tension and stretching, the piece breaks off or seems too stiff and brittle, and has a tendency to break rather than stretch, then there is evidence of over-cure. To be just right, the rubber should be tough, elastic, not brittle and come up to the test for tension.

Some repair men are able to judge very closely by feeling the vulcanized rubber with the blunt point of a lead pencil, or by the sense of smell. If under-cured, the stocks will retain dents and have a doughy odor, or if cured or over-cured will have a strong, gaseous smell. This is not, however, a very sure way, and it is safer to vulcanize a small experimental repair at least every week to make sure that the equipment is working well and that steam and other conditions are correct.

It sometimes happens that the rubber does not flow freely, the result being a rough surface when taken from the mold. The cause is the lack of sufficient pressure on the inside of the casing. When

steel coils are used in retreading it is important that the tire be wrapped tightly to secure the proper pressure. Many use air bags rather than coils, because the air pressure forces the gum against the cross wrappings. If the bag does not fit snugly, strips of cured fabric may be used as padding.

If the molds are clogged with dirt or if air pockets form, a longer time is taken to heat them and cures vary. Water also collects in molds, so that while the pressure may be correct, the temperature will be too low to cure in the regular time. The inlet pipes should be disconnected occasionally and a strong current of compressed air shot through the molds. All dirt will thus be dislodged.

Repair molds are provided with a drain at the lowest point where the condensed steam collects, and a pet-cock at the highest point to allow air to escape.

Tips to Tire Repair Men

Do not forget that there should be no moisture in any part of the repair before it goes into the mold.

This means that it is necessary to keep perspiring hands off cemented parts of the casing before the stock is applied, and that when using gasoline to clean the surface, the solvent is allowed to dry thoroughly before the stock is applied.

Do not forget to test the solvent occasionally, even though it is guaranteed above 72° test.

Do not try to rush a job by using a first coat of cement any heavier than the casing will absorb.

The solvent used in cement is no more than a carrier to convey the cement into the pores of the fabric, and the thinner the solvent the better the cohesion obtained. This applies to the first coat especially. The second and third coats must each be heavier.

Do not attempt to set a certain drying time for cement. Atmospheric conditions require it to dry longer some times than others.

Learn to determine when the cement is sufficiently dry by touching it with the finger tips.

Do not be afraid to use a little more cushion gum, especially around the injury and over the fabric steps—it will insure a better splice and union.

Always lap fabric at least 1/8 of an inch and cord 3/4 of an inch, over the step.

Be sure to stitch fabric thoroughly to remove the stretch—simply rolling it with the flat roller is not sufficient to do this.

Cushion the exposed edges of any reinforced patch to insure a closer union and prevent the tube from chafing.

In using a reliner be sure to apply and cure it properly, otherwise it will loosen and create friction which will eventually cause a blow-out. A reliner vulcanized is an actual part of the casing.

All tread stock, camel-back, breaker strip, etc., should be applied and rolled down from the center outwards, thus trapping as little air as possible, and all air bubbles should thereafter be pricked.

Keep all dirt and soapstone away from any joint and from underneath any of the stock.

The utmost care should be taken in applying stock where the union comes with the old rubber, to see that it is not built higher and that it is skived off so that there is no tendency of the stock to flow beyond the cemented part. A little precaution and extra work at this time will prevent unnecessary trouble after the tire comes out of the mold.

Never start or stop a ply of fabric at the flexing point of the tire as the edge of the fabric has a tendency to cut through the plies underneath, caused by the constant motion at this part of the tire.

There are three places to stop fabric—at the bead, in the center of the side wall if the injury is elsewhere, and in the center of the tread when the injury is at the bead or in the side wall.

In repairing a blow-out by the outside method, if the tread is in good condition it is not necessary to throw it away and use new camel-back, but it is better to remove the tread entirely by cutting it at each end of the repair, laying it aside and applying it after the injury is built up, as it prevents collecting air under the tread at the point where it is bent back.

Bevel the edges where joints are made—it will insure a perfect union. Too long a bevel, however, it not advisable.

Always use new fabric in making an outside sectional repair, and in replacing any fabric that is removed.

Reliner and reinforcement patches on the interior of a tire may be pulled from an old tire if the fabric shows itself to be in good condition, but to attempt to peel the plies apart, buff and cement them, would cost more in the end than new fabric, and will not insure a serviceable job.

Watch the air bags. Make sure that they fit the casing and the casing the mold.

The latest type of mold on the market eliminates any difficulty formerly encountered in curing a tire in a mold too large or too small

for it, as it can be perfectly adjusted to fit any size tire, whether cord or fabric, but under any circumstances, it must be seen that the air bag perfectly fits the tire without having to be expanded or deflated. If it is too small, pad it out—if too large, use a smaller bag.

Always take care to see that the bead plates are seated properly. Nothing so exasperates a customer as a sectional job with a bead so much larger than the rest of the tire that it is practically impossible to mount it.

Do not seat the bead plates too far before putting 5 or 10 pounds of air in the bag.

Watch the steam pressure. Keeping an even temperature while the cure is being made cannot be rated as unimportant in securing the proper cure.

No mold should be used which does not have pet cocks at the dead end to remove the cold air and wet steam. Dry blue steam is necessary in securing a perfect cure and an even temperature.

If a soft cure results in some parts of the tread, or repair, do not blame the stock—see if the return line of the mold is not stopped up and the mold partially filled with water.

A little over-cure is better than an under-cure, but it is always best to know exactly what length of cure to give all stock and remove it when sure the rubber is sufficiently cured.

Do not hasten the drying of cement under a temperature above 85°, or by hanging in a heavy draft, as this merely semi-cures the outer surface of the cement, forming a glazed condition which prevents adhesion.

Keep the shop entirely clean at all times—customers will like it better and the material and cement will run less chance of becoming spoiled.

United States Government Standard Specifications

The United States Government standard specifications for pneumatic tire repair accessories and materials follow:

Automobile Tire Accessories

GS 1070—Blow-Out Patches

They are recommended only for emergency repairs. A vulcanized repair should be made as soon as possible.

Patches shall be made at least six-ply seven-ounce fabric, or its equivalent, as approved by the Government. Plies must be properly stepped down, according to good commercial practice. Two ears are

required on all patches. The length of the patch must be according to the manufacturer's standard commercial practice. The 3-inch and 3½-inch must be designed for use with clincher fabric tires and the 4-inch, 4½-inch, and 5-inch must be of ample size for use with cord tires.

GS 1071—Cementless Patches

They shall be of one standard size, 1½-inches in diameter. The gage and compound of the stock shall comply with the specification for cured black tube stock as given in the Repair Material Specification. Patches molded to a featheredge are preferred.

GS 1072—Reliners

They are recommended only in case of extreme necessity. All sizes up to 4-inch shall be made of at least three plies, while 4-inch and larger must be made of at least four plies of seven-ounce fabric, or its equivalent, as approved by the Government. The plies shall be built up on the bias, and a lap of at least six-inches is required and the edges properly stepped off on the sides and skived on the ends to insure against injury to the tube. Each size reliner must be designed so that its width will be such as to properly fit the standard tire of that size. This includes 3-inch and 3½-inch in fabric clincher and 4-inch or larger in cord tires. The edge must stop approximately ¾-inch above the toe of the bead.

GS 1073—Flaps

Motorcycle flaps must be of the cemented-in type and equal in construction and quality to the flap supplied by the bidder on tires made to Government specifications.

Straight-side cord tire flaps must be of the floating type and equal in construction and quality to the flap supplied by the bidder on tires made to Government specifications.

GS 1074—Fabric Cord Patches

These patches must be made according to the manufacturer's standard practice from carded Egyptian, combed peeler cotton fabric, or their physical equivalent, as approved by Government, weighing not less than 13 ounces nor more than 16 ounces per square yard.

The plies must be laid on the bias, frictioned or spread and skim-coated on both sides, equally to a minimum gage of 0.043-inch. The compound must fill the specification set forth in the repair material specifications covering friction, skim, cushion, and tube stocks.

All sizes up to 6-inch shall be four plies and 6-inch, and above shall be six plies. The patch must be properly stepped down and preference will be given to gum-stripped ends to insure against injury to the tube. There shall be applied to the center of the back of the patch a padding not less than 1/16-inch thick. The minimum length and breadth of the padding shall not be less than the length of pad specified below.

The following sizes are standard and lengths required are given in table:

	Patch length	Length of pad
	Inches	
No. GS 1074x1.—3½ and 4 inch	10	4
No. GS 1074x2.—4½ and 5 inch	11	5
No. GS 1074x3.—6 inch	12	6
No. GS 1074x4.—7 inch	13	7
No. GS 1074x5.—8 inch	14	8

Repair Kits
GS 1090

Repair kits shall be made up with the following material, packed in a round cardboard carton with tin ends and cover, approximately 2½-inches in diameter and 2½-inches deep.

It shall contain:

Six cementless patches.
Strip of cured back tube gum 2 by 8 inches.
Tube of cement 2½ by ½-inch diameter, or equivalent.
Piece of sandpaper 2 by 8 inches, or equivalent.
Two valve insides, Schrader's 1801 (GS 1082x1), or approved equivalent.
Two valve caps, Schrader's 880 (GS 1081x1), or approved equivalent.

Repair Materials for Pneumatic Tires
GS 1091

Fabrics (Only Four Types Necessary)
GS 1091x1

Square-Woven Building Fabric: This fabric shall be 17¼ ounces per square yard with an allowable variation of 3 per cent plus or minus. It shall be 23 by 23 weave. The fabric shall be made from long-staple cotton with a tensile strength for each warp and fil-

ling of at least 150 pounds per inch. Methods of testing to be the same as specified in the fabric casing specifications. The fabric shall be frictioned both sides and skim coated one side to a minimum gage of 0.047-inch.

GS 1091x2

CORD BUILDER FABRIC: This fabric shall be made from long-staple carded Egyptian or combed Peeler cotton, or their physical equivalent, as approved by the Government, weighing not less than 13 nor more than 16 ounces per square yard. The cord fabric shall be frictioned or spread both sides and skim-coated equally on both sides to a gage of 0.050-inch.

GS 1091x3

BEAD FABRIC SQUARE WOVEN: This fabric shall weigh at least eight ounces per square yard. It shall be made from long-staple cotton and shall be frictioned both sides.

GS 1091x4

BREAKER FABRIC: This breaker shall be an open-weave fabric of at least 10 ounces per square yard. It shall be made from long-staple cotton. It shall be frictioned or spread and also skim-coated equally on both sides. The minimum gage shall be 0.070-inch.

GS 1092

Compounds (Only Three Stocks Necessary)

GS 1092x1

FRICTION, SEAM, CUSHION, AND TUBE REPAIR STOCK: (a) Specific gravity not to be over 1.30. These shall be made from and have the characteristics of a compound containing at least 65 per cent by volume of new rubber.

(b) Two tread stocks shall be used. There shall be a black stock of specific gravity not over 1.60 and a white or gray stock of specific gravity not over 1.90. The treads shall be made from and have the characteristics of a compound containing at least 50 per cent by volume of new rubber. The kind and quality of the reclaimed rubber must be declared when used. The tensile strength of a properly cured tread sample shall be 2,000 pounds per square inch, with a minimum elongation of 400 per cent (2 to 10 inches). The permanent set shall not exceed 30 per cent after an elongation of 350 per cent (2 to 9 inches) .

(c) Side wall stocks. Use tread stock.

(d) Retread semi-cured bands. Use repair tread stock specifications.

(e) Cured black tube stock. The uncured stocks used must fill the specifications for the friction coat and cushion stocks.

The gage of the raw gum shall be not less than 0.015.

The gage of the cured gum shall be not less than 0.032.

GS 1093

Cements (Two Cements Only)

GS 1093x1

(a) Vulcanizing cement shall be made from a compound having a maximum specific gravity of 1.15 containing at least 75 per cent by volume of new rubber. It shall be dissolved in benzol. The rubber compound content by weight to be determined by evaporation and milled to constant weight, shall be not less than 17 per cent of the total weight of the cement.

GS 1093x2

(b) Acid cure cement: This cement to be made from new rubber with no other ingredients than a benzol solvent. The pure rubber content weight to be determined by evaporation and milled to a constant weight, shall be not less than 6 per cent of the total weight of the cement. The acid solution used with this cement shall be 2 per cent monochloride of sulphur and 98 per cent benzol.

CURE

The base cure on a 4-inch section for repair material should be based on 45 minutes at 50 pounds steam pressure, it being understood that cure is to be made under proper conditions.

VALVE BASES
GS 1094

Two sizes designated as large and small will be required. The standard commercial, after sample bases have been submitted to and approved by the Government, will be accepted.

AIR BAGS
GS 1095

The air bags shall be made according to the standard practice and design of the manufacturer. A sample section of the bag showing the end reinforcement and cross section of the bag must be sub-

mitted to the Government for approval. Bags must be tested with 100 pounds air pressure and show no leaks when immersed in water.

Prices

Repair materials will be purchased on a pound basis. For comparison of different quotations the specific gravity and price on the basis of volume must be submitted by the bidder in addition to the price on a weight basis, it being understood that the volume price shall be the price per square yard of the gage specified in the request for bid.

CHAPTER XLII

RETREADING TIRES

A Great New Indispensable Industry

FOLLOWING closely in the wake of the great tire industry is another, which, though it will always be of less magnitude, is rapidly assuming large proportions. This is the retreading of tires. The reason for this industry's existence is not hard to find. It has been estimated, for example, that fully $100,000,000 worth of tires is needlessly spoiled, rendered prematurely unserviceable, by ignorant or reckless drivers every year in the United States. In the salvaging of a large part of this vast wastage, as well as in restoring to usefulness a huge quantity of tires unavoidably damaged, lies the opportunity for service by the retread man. Thrifty tire users can with his aid keep the junk man long at bay, and can also be spared the heavy expense of new tires, by having their old ones overhauled and, at moderate cost, have from 2,000 to 3,000 miles built anew into the tires.

The tire repair man has come to be as indispensable as the shoe-fixer or the repair-tailor. That retreading is rapidly increasing in favor is attested not only by the numerous repair shops being opened everywhere, but also by the great and varied output, constantly improving, of vulcanizing outfits for lightening the retreader's labor and rendering it more efficient.

Importance of Good Standard Materials

Tire retreading, the greatest conservation factor in the automobile and accessory world, has practically passed through its experimental stage. In fact, the watchword now is standardization for all mechanism, materials, and processes. The days of doing work by guessing and haphazard are numbered. Successful retreaders have learned that good work cannot be done nor can trade be developed without adopting thoroughgoing factory methods, using prime materials, and installing up-to-date equipment. They have found out that there is no economy in buying cheap stuff. Quality counts here as in every other line of repair work. For instance, an 80-cent tread stock will be found cheaper in the long run than a 40-cent stock, especially when rubber costs 50 cents a pound. So, too, must all stock be fresh. Aged gum

will "bloom," and the free sulphur coating will prevent the plies from curing together, just as flour on loaves of dough will prevent them from baking together.

"Available" Tires

Good materials having been provided, the careful retread man will select for repair only "available" tires, leaving to the overconfident beginner and the unscrupulous repairer the jobs that are plainly impossible and that cannot be guaranteed. To determine if a casing will stand a retread, it is well to note first if the tire is rim-cut or beginning to give away above the bead to such an extent as to require an extensive and expensive job being done first in order to insure holding the retread applied afterward. Separation of fabric should be especially looked for. This is most likely to occur in the flexing point just at the lower edge of the tread. When the tire is bent, bulged places may be noticed on either the exterior or interior of the casing, which can also be determined by pricking with an awl and prying downward with the handle. A sound tire should flex equally inside and out. Checked places in the fabric are next sought. These may be found by spreading the beads. If the checks are many and large a retread should not be tried unless the casing is reinforced with fabric or a reliner.

Retreading Technique

The ideal condition for retreading is, first of all, a good foundation. There must be neither loose fabric, oily fabric, wet spots nor dirt. Often an extensive removal of spoiled fabric must be made, but this loss in tire strength can be offset by vulcanizing (not cementing) in a reliner on the inner side of the casing. A retread band is now generally used for repairs as it is either half or fully cured under heavy pressure and, being a massed unit, is of course, free from blisters. If the band be properly applied the usual cloth hand wrapping will afford pressure enough for curing.

Four Methods of Retreading

A choice may be made of four methods in building up a retread. Steps may be built with raw gum; "camel back" (raw gum formed like a tread) may be cut and fitted in place; "camel back" may be made from pieces of gum cut to size and fitted into place as a unit; or a semi-cured or cured retreading band may be used.

Cutting Down and Building Up

In cutting down a retread, first a line is made on each side of the tire with a tire gage, usually about ½-inch below the original tread

line. Then a cut is made to this line by slicing off a width of the tread around both sides of the tire. The remainder of the tread, on fabric tires, can usually be pulled off with the breaker. On cord tires the tread must be cut off in strips. It is well to skive or bevel the upper edge of the side wall. After a suitable repair cavity is made it is buffed, roughened, and hung up to dry. Cement is now applied, two coats answering, but three coats being better. About two hours should be allowed for drying the first two coats separately, and the third coat should be dried (out of a draught) for four to six hours. For building up a retread, cushion gum is first applied, the gum being carried down so that it will lap slightly over the side wall. In putting on cord bands 1/64-inch cushion is advised, and 1/32-inch when putting on raw gums or on fabric tires. If using only tread gums, the repair man may next apply layer after layer of 1/16-inch tread gum, beginning the first layer about one inch from the side walls and then stepping up plies enough for the required thickness, the last ply being allowed to fit down slightly over the side wall for trimming. The final ply gives the retread a smooth surface.

Applying "Camel Back" and Retread Bands

Where "camel back" is used, it is simply applied to the tire if wide enough; but if it be a trifle narrow, the side wall can be stripped with raw gum to take up the space. The same advice applies to the retread band to provide for trimming. The inside of a retread band should be cemented in the same manner as the tire and dried in a similar way. A wide piece of muslin is then placed around the tire to keep the band from sticking to the tire when the band is being slipped on the tire. It must be borne in mind in centering the band that the sides of the band are not the edges to center to, but that the ribs or the sides of the raised non-skid should be used. Then with dividers or a rule it will be easy to get exact centering for the entire band. After centering the band the muslin is carefully pulled away, and the band stitched and rolled carefully from the center, always working toward the outside and using an awl to let air escape from blisters. Sometimes a retread band has to be cut to fit a smaller tire. In such a case it is best to cut the splice on a slant, as in making a layback section. The last step is to set up and cure in a proper vulcanizer.

Gates Half-Sole Repair Tires

Under the Gates patent for applying repair tires to worn casings, the casings are repaired by applying cement to one or both parts, al-

lowing it to become tacky, applying the tread portion of the repair tire to the tread of the casing while in normal form, deforming the sides of the casing to increase their superficial area and then rolling down the sides of the repair-tire while the casing is in its deformed condition.

Blue-Flame Repairs

An innovation in rubber repair work is the use of the Bunsen burner, or blue-flame blow-torch. With it the rubber surface to be patched can be quickly seared, care being taken, of course, not to scorch the fabric; and the rubber can be semi-devulcanized and even some of it melted enough to facilitate repair work. A patch cemented on

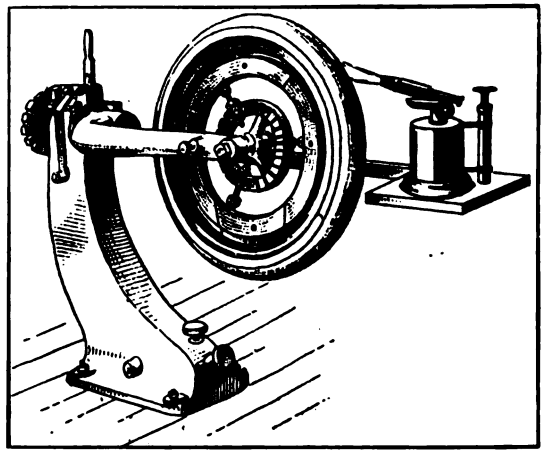

Making a Blue-Flame Repair

such a surface has the proverbial bulldog grip. Filing, buffing, drying, or benzol washing are unnecessary. The blue-flame takes care of all this. In repairing, the new-made sticky surface is given a coating with a solution of 5 per cent pure gum and 95 per cent carbon tetrachloride or benzol. When dry the surface affords a perfect base for the tread stock layers in the build-up.

Retreading Vulcanizer

For practically all forms of retread work the standard vulcanizer is the one-third circle dry heat apparatus, in which live steam is used for curing and water afterward for cooling. Another essential, the forming bag, is made of heavy cotton-woven hose filled with sand.

Some prefer a sand-filled carcass instead as a temporary liner, claiming that as it is already stretched it insures a better job as it conforms better to the shape of the tire being retreaded. Against the sand bag is pressed a third circle of ¾-inch steel. The hot surface of the mold is first coated with soap suds to prevent adhesions, the retreaded part of the tire is put in the mold, the sandbag is placed against the tire, and the steel arc is bolted against the sandbag. Five minutes are allowed for the uniform warming of all parts before the set screws are finally tightened to full, steady pressure for the curing process. When the indicated vulcanizing time has elapsed, the steam is shut off and cold water admitted into the mold. When the tire has been cooled enough it is then ready for the finisher.

CHAPTER XLIII

CORD TIRE REPAIR

WHILE it is true that some makes of cord tires can be repaired only by the manufacturers, or with a special and extensive quipment, most can be handled by any repair man by taking the same precautions and using methods and materials similar to those used in repairing fabric tires. The preferable course for the repair man would be to keep in stock a supply of standard new material obtained from manufacturers. However, good jobs may be done with cord sections carefully selected from discarded casings, although much depends on whether or not the tire carcass to be repaired is built primarily of the cords themselves or of the woven cord fabric.

CORD FABRIC TIRE REPAIRS

Cutting Back the Tread

In mending a cord tire the first step is to measure the injury. Usually the damage is done through the tread. In that case a lay-back section should be cut down to remedy the trouble. The tread on a "cord" cannot be pulled back, as on a fabric tire. It must be cut back in strips, and care should be taken not to damage the outer ply of cords. If possible a splice should be cut in the tread as the latter is about to be laid back. On a large tire the splice can be cut in the center of the lay-back, when the cut is across the tire. The fabric is then blocked out for the step-down ply-out.

Stepping Down the Fabric

If common fabric be used for the rebuild it will be necessary to cut out two plies of cord fabric to equal one of ordinary fabric. An exception is made in the case of tires in which a cord fabric is used of about the same thickness as common fabric. In this case, and owing to the greater resiliency of cord construction, the steps would be 1 to 1½ inches wide, whereas in using cord fabric for the rebuild each step would be about ¾-inch. Heavy tires having about twelve plies of cord fabric should be stepped down at least eight plies. The last couple of cuts may be ended on the side if the injury is in the center of the tire. Three plies at least should be left in the carcass to insure strength while repairing. If the fabric layers end at the heel

of the bead (as on most bus and other large tires) care must be taken to put them back the same way. Finally the cut-out section is buffed and cemented.

Building Up

The tire thus prepared is then built up thus: A 1/16-inch lap of fabric is laid in each division as in building up a common fabric tire, and each is ended on the side wall if they were in that position. The larger tires will require a bead strip or cover-up underneath the side wall and over the inside of the tire. The final steps are reinforcing as is done with common fabric tires, trimming, setting, and curing, the latter being done according to scale.

A well known tire repair expert describes his simple and effective methods of repairing blow-outs in cord tires as follows:

Cut down sections on any cord tires, except the old-style cord, the same as instructed for cutting down fabric tires. In replacing the plies make sure that the lap runs in the same direction as the ply it laps on. Each ply should lap one inch. Where the plies are arranged in groups instead of alternately crossing each other, it is necessary to take care that the new cords run in the same direction outside as the group removed, and the tire should always be reinforced inside with a shoe of the same manner of plies of cord in the same direction as were removed outside. Another important point is the anchor strip, necessary to keep the tire from giving away at the beads.

A large blow-out in a cord tire should be cut down for a full section by the outside method, but cuts or punctures of not more than one inch in length may be repaired from the inside without disturbing the tread and the application of a cord patch built up of alternate plies of cord fabric. The injury on the outside of the tire should be skived out clean with a "rat-tail file," then cemented and filled up the same as explained for tread cuts on fabric tires.

Cure all sections over the inside vulcanizer, as well as in the section mold.

Cable Cord Tire Repairs

Cable cord tires being made of two or three layers, each ply of strands being diagonal to the other, require a different process of repair. Special study should be made of the bead construction in quick demountable types of tires in order to understand how best to remove and replace the heavy cords which are looped over staples in the bead. Such staples must be pulled out to extract the cords. In the bead on the straight-side tires, however, the cord ends are caught

by a heavy bead cover, and such ends either touch each other point to point or the cord terminals are folded over each other. The latter type of tire may be repaired from the outside or inside, depending upon whether the inside or outside cords are broken; but the first named types may be fixed from the inside without affecting the tread or splitting the bead. Sections on cord tires should be buffed until the cords shine and then roughened. It is important to remember that fabric cannot be used in repairing cable cord tire breaks.

Removing and Inserting Cord Sections

After the trouble is located and the tire is turned for cutting down an inner cord section, the broken cords are pulled aside each way to show the point at which to remove the bead cover. The bead cover or chafing strip is cut about two inches each way from the ends of the cords to be removed and either laid back or taken off. If it be a Q. D. tire the staples are then pulled from the bead. The damaged cords are then cut at the turn of the staples (if Q. D.) and drawn out. New cords are then fitted in carefully. Buffing and cementing the tire and the cords complete this first stage of the work. In building up inner cord sections a layer of 1/64-inch cushion gum is put in so that it will slightly overlap the cords remaining; the new, cemented cords and stitches are fitted in place; if a Q. D., new staples are put in with pliers, using an awl first if needed; the new cords and beads are covered with a layer of 1/64-inch cushion; if the old cover is defective the bead is covered with two plies of bead cover, the first fitting from the toe of the bead up one inch on the cords, on the inside, and the second overlapping it and reaching half an inch higher. The tire is then put on an impression pad and cured to scale.

In cutting down an outer and inner section the bead cover is cut away on both sides two inches beyond the point where the cords come out; staples on both sides are pulled (if a Q. D.); the inner cords are split at turn on staples and all cords laid back to the staples; the outer cords are split at turn on staples and pulled; the outer cords are taken out after the side wall has been cut off or buffed enough to clear the cords and the bead cover has been fully removed, thus allowing the cords to be pulled through and replaced; and buffing and cementing follow.

The operations of rebuilding, cord-inserting, cementing, and curing are practically the same as for the inner cord section.

The straight-side tire, in which the cord ends are overlapped in the bead core, is repaired from the outside if the outer cords are dam-

aged and from the inside if the inner cords are injured. A splice is cut through the center of the place to be repaired; a double lay-back made; side walls cut at a slant; the bead cover is removed inside and out two inches each way; cords are pulled out; new cords fitted in; and the job buffed and cemented.

In building up the prepared tire carcass, a layer of 1/64-inch cushion gum is first applied, cords are inserted and stitched down; another 1/64-inch cushion layer is put on over new and old cords; side wall is applied and smoothed under tread line; a 1/32-inch cushion is laid, the tread lay-back is brought down, filled, trimmed, and the whole cured to scale with the impression pad. Slight variations in the processes outlined, such as in cutting down and building up cord separations and in bead mending, are noted in other work. Tread patches on cords are made in step-down fashion and in much the same manner in other details as on fabric tires.

The tire expert previously quoted describes his easy methods of repairing old-style two and four-ply cord tires as follows:

The old-style cord differs from other cord tires in that there are only two to four plies of fabric. In repairing two-ply tires it is necessary to remove only the cords that are injured. If the injured cords are on the outside, make a "lay-back" the same as on any other tire. Remove the plies of cord from bead to bead.

If the inside plies are the only ones affected, they may be removed from the inside without disturbing the outside of the tire. The tire may then be buffed and cemented and replaced with the same number of cords of the same size and type as those removed. The number and type is stamped on the side wall of the tire. If these cords are not obtainable from another tire or from the company, and the number of cords removed should not be more than ten, it may be repaired by laying in strips of cord fabric, entirely filling up the space.

Where not more than four cords are broken in one place, they may be replaced without removing the cord from bead to bead, but by simply stepping out all but one broken cord, breaking the splices in different places an inch apart. Do not attempt to repair this nature of injury on more than four cords. Always use a 1/16 inch ply of cushion gum between the two-ply cords and under the breaker.

Repairing a blow-out on the four-ply cord is different from the two-ply repair in that one outside ply and one inside ply are removed and reinforced inside with a cord patch of alternate plies of cord fabric. When one ply only is affected, remove only that ply, if it is outside or inside, otherwise reinforce inside with a cord shoe.

UNITED STATES GOVERNMENT FABRIC CORD PATCH SPECIFICATIONS

The United States Government requirements for fabric cord patches direct that the patches must be made according to the manufacturer's standard practice from carded Egyptian, combed Peeler cotton fabric, or their physical equivalent, as approved by the Government, weighing not less than 13 ounces nor more than 16 ounces per square yard.

The plies must be laid on the bias, frictioned or spread and skim-coated on both sides, equally to a minimum gage of 0.043-inch. The compound must fill the specification set forth in the repair material specifications covering friction, skim, cushion, and tube stocks.

All sizes up to 6-inch shall be four plies and 6-inch and above shall be six plies. The patch must be properly stepped down and preference will be given to gum-stripped ends to insure against injury to the tube. There shall be applied in the center of the back of the patch a padding not less than 1/16-inch thick. The minimum length and breadth of the padding shall not be less than the length of pad specified below.

The following sizes are standard and lengths required are given in table:

	Patch length	Length of pad
	Inches	
No. GS 1074x1.—3½ and 4 inch	10	4
No. GS 1074x2.—4½ and 5 inch	11	5
No. GS 1074x3.—6 inch	12	6
No. GS 1074x4.—7 inch	13	7
No. GS 1074x5.—8 inch	14	8

PRESSURE AND CURING HINTS

An essential in cord tire repair is ample pressure, especially on the side walls during the curing process. If the pressure be insufficient a gas may form and by causing porosity ruin the part being repaired. Pressure may be applied on a hot plate with weights or screws. From 90 to 100 pounds of air should be applied where sectional or full circle bags are used. Where steam is utilized instead of air the pressure should not be allowed to exceed 60 pounds, however, as more would yield too much heat and over-cure the section. Sometimes to hurry a job a workman will take a chance on fast curing at a high temperature, but the result is almost always an inferior repair. Experience has proved that rubber cured at a low temperature always

has a greater strength and more quality than that cured at a high degree of heat. To get the best results, it is well to allow a tread cut 1/4-inch deep an hour and one-half to cure at 40 pounds pressure on a hot plate; a cut ½-inch deep two hours, and a cut ¾-inch deep two and one-half hours. So, too, a section built in a pneumatic truck tire must be cured from both sides because of the extra thickness of such tires. If steam be not used in the sectional bag, the section must be given an extra cure on an inside patch vulcanizer. Finally, through all the steps of tire repair, the workman should bear in mind that cleanliness, prime materials, and faithful adherence to standard formulae go a long way toward insuring success.

Cord Tire Repair Patches

A simple and satisfactory method of repairing cord tires when damaged by inside breaks of all kinds and by injuries received from stone bruises, is here shown. It consists of the application of an inside

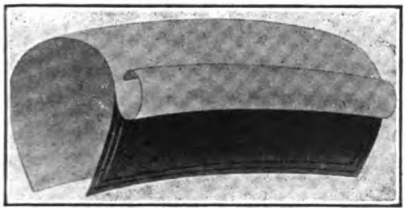

Goodyear Cord Patch

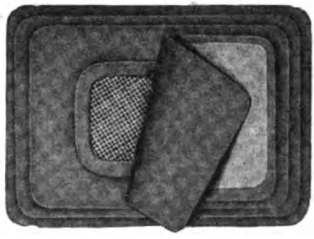

Squires Cord Patch

patch built of several layers of cords, just, as cord tires are built, with a heavy friction of gum between each layer of cords and the edges tapered to prevent tube chafing. It is made in three sizes to fit cord tires from three to eight inches in width and adds many miles to the service of partly worn-out casings, since it can be used to reinforce permanently the weak spots resulting from injuries of different kinds, if it is properly applied.

The Squires cord tire adhesive casing patch consists of four plies of inner tube stock and one of rubberized stockinette. Between the third and fourth plies is set a piece of flexible wire mesh cut on the bias. The illustration shows the patch before it is molded and vulcanized, after which one side is coated with cement, protected by a gauze liner. The armored casing patch is stuck smoothly over the rupture so that both ends of it overlap the bead of the tire.

CHAPTER XLIV

TIRE REBUILDING

THE rapid growth in popularity of automobiling has developed a wide-spread demand among tire users for dependable rebuilt tires, tire repairs, and devices such as tire reliners, blow-out patches and other means for extending the usefulness of tires. In response to this demand innumerable tire repair plants are to be found on every hand. Some of these are developing their facilities to enable them to rebuild tires and a number of companies are now organized and operating plants in various sections of the country, exclusively for rebuilding both wrapped tread and full molded tires.

Sources of Material

The stock of repairable tires is selected from the standard makes of high-grade guaranteed tires. Such old tires are stripped down from their road-worn condition to a basis of sound fabric plies, and after being repaired, are rebuilt with new rubber and fabric, or salvaged fabric, into a serviceable product salable as legitimate low-priced merchandise.

A Growing Essential Business

Restoring old tires to a serviceable condition by repairing is, of course, nothing new. To a limited extent it has been practiced for some time, especially in Europe, but not until within the past two or three years has it attained considerable proportions in this country. The enormous number of tires in use and the desire on the part of their owners to derive the utmost of tire mileage to compensate for the high cost of motoring, now form the basis of the retreading business in the United States.

Previous to the abnormal conditions due to the World War, motorists generally did not appreciate the possibilities of expert tire rebuilding, but when convinced through necessity that it is practical economy and that the last thousand miles of tire service is in fact the cheapest, they accepted it as they have the factory rebuilt automobile. A few pioneer firms have demonstrated that the service mileage of many casings can be nearly doubled by retreading at an expense of about one-third of the first cost of the casing. Probably 000,000 tires, or nearly one-third of those now in use, could be uilt annually with

benefit to the user and at a profit of several million dollars to the thousands of repair men of the country.

Thus tire rebuilding is today an essential and profitable business, depending fully as much on ability to judge whether casings are worth the necessary repairs as on skill in performing the work.

Selecting Tires for Rebuilding

The first selection of road-worn tires for rebuilding is done by the rubber scrap dealers who specialize in old tires and who also salvage sound tire fabric from unrepairable old tires for use in rebuilding such as are repairable, and for manufacture into tire reliners, blow-out patches, etc. The final selection requires the expert judgment of a man familiar with tire construction, and able to diagnose structural weaknesses in order to eliminate all casings that cannot be turned into serviceable rebuilt tires.

If a tire has been well treated, run under normal conditions, and the fabric protected from the rotting action of moisture by having cuts and other damages vulcanized in the initial stages, there is no reason why it should not justify a new tread just as a pair of good shoes is worth new soles. Casings that have no damages aside from treads worn down to the breaker strip give the most satisfaction in retreading, but it is often worth while to repair still worse defects. The whole matter depends upon whether the general condition of the fabric carcass justifies the expense, and a correct decision requires intelligent knowledge and practical experience. A casing may appear sound and yet prove otherwise on expert examination. On the other hand, many casings are condemned because of local damages which, when properly repaired, would render retreading advisable. It must always be remembered, however, that though it may be possible to repair damage of the very worst description, the cost must bear a reasonable relation to the mileage value of the casing.

Thus it is that very few casings having large blow-outs, rim cuts, or requiring recovering or relining are worth retreading. Small cuts and nail holes are readily repaired by sectional relines or stepped-out patches. A blow-out in the tread, if not too large, can be remedied by inserting a new section, but few casings having a large blow-out in the side are worth retreading. Blow-outs, especially in the side of the casing, often result from under-inflation, or from the car being undertired, or both. Under these conditions a constant flexing or to and fro motion of the sides of the casing is set up and the mischief extends far beyond the area of the actual burst. Strand by strand the fabric

breaks, and it may be greatly weakened throughout before the blow-out occurs. If, on turning the casing inside out and examining carefully, the fabric is found to be chafed and there are a number of little tears or cracks, it is certain that the carcass has been weakened. Although the burst may be repaired, the casing as a whole will never regain its former strength, and can be expected to last only a limited time, though it may be strengthened by relining.

The age of a casing is an important consideration in rebuilding, and generally speaking this is shown by the hardness of the rubber. If it no longer responds readily to pressure and shows signs of cracking, it is doubtful wisdom to attempt retreading, as the fabric is probably affected also.

Typical Method of Rebuilding Tires

Different methods have been developed for successfully rebuilding tires, both wrapped tread and full molded. The work consists essentially of four parts; (1) tearing down, (2) repairing, (3) rebuilding, (4) curing. Two typical processes are here given. One method is to tear apart the old tire, layer by layer, and use the material thus obtained (except the old rubber) in building a new tire, cutting out the damaged portion of the fabric and building up as in building a new tire of new material, except for the use of the beads and the old fabric bases. This method is effective but the cost is very little lower than where new fabric is used.

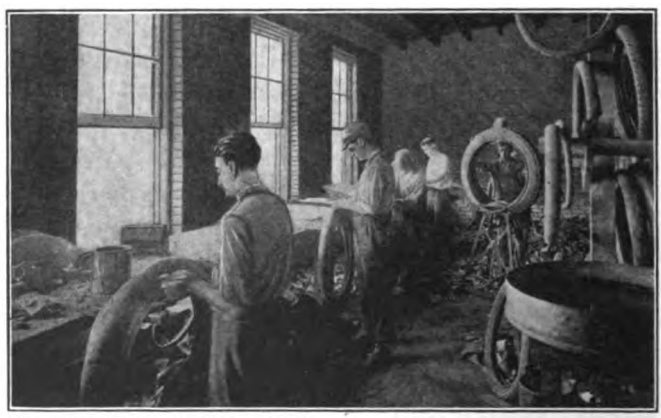

Altenburg Tire Equipment Co.

The Cutting-Down Process

A more economical and practical way is the following, recommended by a concern which has developed the system of molding described.

Tearing Down

An old tire, carefully selected, having a good body with no rim-cuts, is hung on an ordinary tire core and the center of the tread is skived down to the fabric for a space of about six inches in length. The tire is then put on a machine having an interchangeable tool which cuts through the outside ply of fabric from the tread to the bead point. The tire is then taken off, turned around, and the fabric cut from the center to the opposite bead. This leaves the outside ply of fabric cut through from bead point to bead point. This outside ply, including the tread, is now peeled back for a distance of four or five inches and stripped from the tire with the assistance of hand-tools.

The object in removing the first ply of fabric from the tire to be rebuilt is to minimize the amount of labor in preparing the old tire for rebuilding and to secure the proper vulcanization of the rebuilt tire. The first ply of fabric, generally full of sand, etc., is removed before the carcass or body of the tire is cemented and the new tread applied.

Rebuilding

The body of the old tire, after removal of the tread and first ply of fabric, is examined and if there are any blow-outs or weak places in it, these are stripped off as for an ordinary sectional repair.

Hibbs Rubber Co.

Building Up Rebuilt Tires

The tire then goes to the building-up department, where it receives two coats of good vulcanizing cement and is allowed to dry, after which the blow-outs and weak places are repaired with reclaimed tire fabric. Any repairs made on the inside of the tire are made on the bias, giving the ends of the repair fabric the appearance of an ordinary

splice. The tire is then mounted on a collapsible core, and one ply of reclaimed fabric is applied on the outside to replace that removed with the old tread. The cushion gum, bead fabric, breaker fabric and tread gum, all of new material, are then applied in the same manner as in building a new tire, when the completed job is ready for curing in a pot heater, also known as a kettle vulcanizer, or in an adjustable retread mold. Such in brief is the process of rebuilding. The details of the work are as follows:

Removing the Tread

Each casing, securely tagged with the owner's name and address is first sent to the tread cutting room, which is equipped with a bench along the wall and a tire building last or mandrel for each workman at convenient intervals, also an adequate assortment of rubber worker's tools, including suitable knives, fabric cutters and pliers, shears, roughening brushes, hand rollers, etc.

The worn tread, breaker strip and cushion stock down to the fabric are completely removed with a sharp knife and the exposed edges of the side wall gum are skived or beveled, care being taken to avoid cutting into the fabric. The side walls are allowed to remain intact unless defective, in which case they also must be removed in the same manner together with the chafing strip. If the tread is so badly cut that it is difficult to skin, a buffing machine equipped with a rotary rasp will be more effective than the knife.

Fabric tires can usually be peeled after cutting at the edges, but it is necessary to skive the tread from cord tires to prevent lifting the old plies of cord.

Before proceeding further be sure that the tire is thoroughly dry and free from all oil or grease where any cement must be applied.

Repairing the Carcass

The casing is next reversed to expose the inside and carefully examined for weak places. For small inside repairs two tire jacks or "reversers" will hold the beads open while the work is being done and obviate the necessity of reversing the entire casing. All fabric, bead and side wall damages are then treated by the usual methods of tire repairing and vulcanizing quite irrespective of the retreading to follow.

Relining

Never use a reliner in an attempt to make a retread give sufficient mileage, unless this reliner is merely used to strengthen a fabric that is

barely checked. A tire cannot be made out of a reliner, and if the casing is in good sound condition, it will give more mileage without a reliner than with one.

Buffing

When the fabric or cord repairs have been completed, all particles of old rubber and dirt are removed from the outside of the casing by means of a buffing machine equipped with a rotary wire brush which also roughens the surface of the fabric. All rubber dust and loose fabric particles are dusted off with a whisk broom or

Buffing the Casing

fine hand brush, when the casing is ready for retreading, unless recovering of one or both side walls is necessary. Buffing starts the work of retreading with a good foundation. It gives the cement a clean new surface to cling to.

Recovering

If the side walls of the casing are damaged to such an extent that a small local repair after the well-known manner is not sufficient, the damaged side wall or walls and corresponding bead or chafing strip will have been removed with the tread, and the casing must first be recovered. Two or three coats of vulcanizing cement are applied to the well-buffed fabric of the carcass as needed, each coat being allowed to

dry separately. The bead strip is first replaced with an 8-ounce fabric frictioned two sides, lapping 1-inch on the outside and 1 1-2 inches on the inside. The side walls are next applied, using one ply of black, white, gray or red unvulcanized gum of proper thickness—usually 1-16 or 3/32-inch wide—and wide enough so that the tread when put in place will overlap 1 inch. Careful rolling to eliminate all air blisters is essential.

Retreading

There are in common use at the present time four principal methods of retreading tires. They are as follows:

1. Building up the tread of unvulcanized rubber, wrapping and curing in a pot heater or kettle vulcanizer. If a ribbed tread is desired, the cure is effected in a retread mold.

2. Using a "camel back" tread gum specially prepared in one piece to proper thickness, and then curing in a kettle vulcanizer.

3. Applying endless semi-cured retread bands with beaded or non-skid tread designs, filling around the raised parts of the tread with soapstone mortar, or using a negative wrapping pad, wrapping and curing in a kettle vulcanizer.

4. Supplying a new tread by any of the three foregoing methods and vulcanizing in sections by three or four cures in a cavity retread mold.

Building Up and Applying the Tread

To the buffed outside surface of the casing two or three coats of vulcanizing cement are applied as needed, permitting each to dry thoroughly. From one-half to one hour must be allowed for the first coat or coats and from two to five hours for the last coat. A longer time is required in cold damp weather than in warm dry weather.

Cord tires require not less than three coats of cement, each being allowed to dry separately. The first coat should be a thin solution that will soak into the roughened cords, the second and third coats medium heavy solutions. The first two coats must be allowed to dry at least one hour and the third coat from six to twelve hours. Over night is usually convenient and sufficient.

When the cement is thoroughly dry, a strip of cushion stock, usually 1-64 or 1-32-inch in thickness, and wide enough to cover the cemented surface completely of within an inch on either side is applied. Unvulcanized cement and cushion stock is made in five thicknesses, 1-64, 1-32, 3-64, 1-16 and 3-32-inch, and is furnished in 5, 10, 25 and 50-pound rolls 18 and 36 inches wide. Above the cushion stock is laid

the breaker strip of coarsely woven fabric frictioned and coated on both sides, and rolled firmly into place with a hand roller. To prevent air pockets, the edges of the breaker strip are bound with half-inch strips of cushion stock rolled down firmly.

The breaker strip is of great importance to the tire. It prevents separation of the tread; obviates the formation of mud boils, and reduces the possibilities of fabric breaks resulting from stone bruises. The following table indicates the width of breaker strip used on casings of various size:

Size of Tire	Width of Breaker Strip
3-inch	2 inches
3 1-2 and 4-inch	2 1-2 inches
4 1-2, 5, 5 1-2 and 6-inch	3 inches

The tread is next applied. First, however, it must be built up with three or four strips of black, white, gray or red unvulcanized tread gum of suitable width and length sufficient to reach around the entire circumference of the casing. Unvulcanized tread gum is prepared in thicknesses, 3-64, 1-16 and 3-32 of an inch, and is furnished in 5, 10, 12 1-2, 25 and 50 pound rolls, 12, 18 and 36 inches wide. The following table shows the length of tread and the width of the various tread plies for different size tires:

Size of Tire	Length of Tread	No. Plies	Width of Plies in Inches					
			1st Ply	2nd Ply	3rd Ply	4th Ply	5th Ply	6th Ply
28x3	7′2″	3	3¾	3	4½			
30x3	7′6″	3	3¾	3	4½			
29x3½	7′4″	4	4¼	3½	2¾	5		
30x3½	7′6″	4	4¼	3½	2¾	5		
32x3½	8′0″	4	4¼	3½	2¾	5		
31x4	7′9″	4	5	4¼	3½	5¾		
32x4	8′0″	4	5	4¼	3½	5¾		
33x4	8′3″	4	5	4¼	3½	5¾		
34x4	8′6″	4	5	4¼	3½	5¾		
33x4½	8′3″	5	5¾	5	4¼	3½	6½	
34x4½	8′6″	5	5¾	5	4¼	3½	6½	
35x4½	8′9″	5	5¾	5	4¼	3½	6½	
35x5	8′9″	6	6½	5¾	5	4¼	3½	7¼
36x6	9′0″	6	8	7¼	6½	5¾	5	8¾

Special conditions sometimes alter the actual figures. It is a good plan to measure the buffed portion of the casing to obtain the necessary width of the top or over-all ply. At least 1-4-inch must be allowed for variation in applying, also a substantial lap in the length of the tread.

The tread gum is cut on a long, flat, zinc-top table with the aid of a straight-edge, ruler and short sharp knife, the gum being first unrolled the length of the table with the holland liner on top and the liner then rolled back.

In building up the tread the second widest ply, 3-4 of an inch narrower than the widest ply, is placed at the bottom. Above this are placed in diminishing order the required number of plies, being 3-4 of an inch narrower than the one beneath it, until finally the widest ply is placed at the top. Each ply is rolled down securely as laid with a flat hand roller and all air blisters removed by pricking with an awl.

Altenburg Tire Equipment Co.
STITCHING DOWN THE TREAD

In applying the tread to the casing the second widest ply is brought into contact with the breaker strip, the tread is carefully centered all around and pulled tight to prevent wrinkles. It is then rolled down securely with a hand roller or a tread rolling machine, all air blisters being pricked with an awl. The gum is stitched down with a rotary wheel stitcher at the edges of each tread ply, and the rough edges of the splice are finally trimmed off even with the surface of the tread.

Be sure that the stock fills out sufficiently to make a neat lap, and if it is somewhat narrow add extra cushion gum and sheet stock to make up for the deficiency, skiving off all excess rubber so that it is not

necessary for the raw rubber to flow in either direction where the lap comes.

Too much care cannot be exercised in getting a neat joint before the tire goes into the mold, for it will save "doctoring" and re-curing afterwards. If material of the same color as originally used on the tire is applied, it is possible to get a joint that will defy detection.

"Camel Back" Tread Gum

To obviate the necessity of building up treads as needed, there has been placed on the market a specially prepared unvulcanized tread gum called "camel back," because it is built up to a hump in the center where the thickness is needed. This requires only to be cut off to the desired length; waste is reduced to the minimum, and a considerable saving is claimed for it in consequence. It is especially designed for retreading tires of the smooth or ribbed tread type, being constructed in one piece by means of special dies, thereby obviating ply separation, low spots, blooming and air blisters. It is furnished in 25-pound rolls wrapped in a liner and packed four rolls in a box in the following sizes:

For 3-inch tires—5 1-4 inches wide, 3-16-inch thick.
For 3 1-2 inch tires—5 3-4 inches wide, 7-32-inch thick.
For 4-inch tres—6 1-2 inches wide, 9-32-inch thick.
For 4 1-2 and 5-inch tires—7 1-4 inches wide, 5-16-inch thick.

Curing Rebuilt Tires

After the built-up or "camel back" tread has been applied the retreaded casing is ready for curing in a kettle or horizontal vulcanizer or retread mold the same as relines, recovers and rim-cut repairs. Ribbed and non-skid treads may be had on rebuilt tires by vulcanizing them in specially engraved retread molds.

Some repair men assert that the best results in retreading are obtained by using the third-circle type of dry cure retreader, as two or three molds only are necessary for all sizes of tires. Sufficient pressure can be obtained and there is no chance of "buckling" the fabric, as in the single-cure type.

In the case of a retread mold, a complete air bag, an endless retreading coil or set of segment cores is first inserted in the casing and the latter is placed in the mold. The upper half is lowered to the proper place, the air bag inflated to 150 pounds pressure and steam turned into the jacketed mold. After a cure of fifty minutes at sixty to sixty-five pounds the steam is turned off and water is circulated through the molds to cool them. The upper half is then raised and the

tire is taken out. The air bag is removed and the slight over-flow at the edge of the tread trimmed off with a small V-shaped push-knife. The tire is then finished with a coating of talc.

Different brands of tires vary in size, one make will measure 6 3-4 inches from bead to bead, while another brand of the same size will measure 7 or 7 1-2 inches from bead to bead. Therefore, adjustable tire molds are made that give a perfect cure on either a full or scant size tire of a given size. In curing by the open stem wrapped system this variation in the size of tires is easily overcome, but in the mold cure, the tire must fit the mold or it will not be perfect. If the tire is too large, it will be wrinkled or mold-pinched; if too small to fill out the mold there will be insufficient pressure on the tread.

The adjustable mold is made in two pieces—the lower part curing one side and the tread, while the upper part fits down into the lower

Hibbs Rubber Co.
CURING IN ADJUSTABLE MOLDS

and cures the opposite side of the tire, a complete cure being effected in one operation. In curing a scant size tire, the mold is closed completely, while on a full size tire it is left slightly open. Both the upper and lower cavities contain live steam, but valves may be installed in the steam line, so as to cut off the steam in either cavity for curing one side of the tire only, as in the case of a large rim-cut or side-wall repair.

If a pot heater or horizontal vulcanizer rather than a retread mold is employed, the air bag, retreading coil or set of segment cores is inserted in the casing.

Split curing rims, with clincher or straight-side beads as required, are next put in place upon the casing and the two sides clamped securely together by bolts. A strip of wet muslin cut on 45 degrees bias is

stretched around the casing as a surface liner, and over this a heavy wet jacket. In the case of a recovered tire the light muslin jacket is put on before the curing rims.

The following table shows the widths of the jackets required for different size tires:

Size of Tire Inches	Width of Light Jacket Inches	Size of Tire Inches	Width of Heavy Jacket Inches
3	12	3	10
3 ½	15	3½	11½
4 and 4½	18	4	12½
5, 5½ and 6	22	4½	13
		5	13½
		5½	14½
		6	17

The tire is next cross-wrapped with wet strips of 8-ounce fabric 2 1-2 inches wide. The wrapping should be even and very tight to insure uniform pressure, particularly on the side walls of the casing, and to help the beads hold correct shape. The wrappings are wound completely around the casing in one direction and then the operation is reversed and the entire casing wrapped in the opposite direction. For convenience in working, these strips of fabric are previously rolled like surgeon's bandage, either by hand or with one of the several rag rollers on the market.

If the air-bag is used instead of coils or segmental cores, it is inflated to 70 pounds pressure, and the casing is finally cured in a kettle vulcanizer. Common cures are 45 minutes at 35 pounds steam pressure and 40 minutes at 40 pounds.

Endless Retread Bands

Several tire manufacturers supply endless retread bands with ribbed and their own patented non-skid designs in all standard sizes to be applied instead of built-up or "camel back" treads. They are of tough, strong, resilient gum and semi-cured during manufacture so that the final vulcanization will be complete by the use of a kettle vulcanizer.

The casing is prepared in the same manner as for plain retreading, and the inner surface of the endless retread band is also buffed and cemented like the casing. A strip of cushion stock, usually 1-64 or 1-32 of an inch in thickness, and then the breaker strip are applied to the

casing. Over these is placed a strip of tread gum, 1-16 of an inch in thickness and wide enough to cover the buffed surface. Some manufacturers advocate a special retreading cement and the omission of the cushion stock and tread gum, in which case the retread band is applied direct to the cemented casing.

A piece of clean muslin about two inches wider than the tread is placed over the casing, the endless retread band is stretched into position over the muslin and centered on the casing, the muslin being pulled out ahead as the band is centered and rolled down securely, starting at the center and rolling toward the edges as the casing is revolved.

GOODRICH NON-SKID RETREAD BAND

Vulcanizing in the pot heater is as usual, except that a thick mortar of soapstone and water must be filled in around all crevices and depressions of the non-skid tread to insure uniform pressure at all points of the tread and prevent the design from being crushed down and disfigured under the wrapped pressure during vulcanization. In the case of ribbed treads, endless negative wrapping pads may be used instead of the mortar. These pads are made of fabric and gum and are similar in construction to the impression pads used in cavity vulcanizers for forming non-skid tread designs. They are supplied for 3 1-2, 4, 4 1-2, 5 and 5 1-2-inch tires. Non-skid treads with impression pads are usually cured about half an hour longer than smooth treads.

Casings retreaded with smooth endless tread bands should be prepared for curing the same as when built-up unvulcanized treads have been used, except that the surface liner is omitted.

CHAPTER XLV

BICYCLE TIRE REPAIR

REPAIRING bicycle tires is not the difficult matter that many seem to suppose. Single-tube tires are the rule in America and call for special methods of repair. Double-tube tires are common in Europe and their repair is much like that of automobile casings and inner tubes.

Punctures in Single-Tube Tires

When the puncture has been located, the procedure depends upon the size of the hole. If it is only a tack or very small nail hole there are several ways of mending it quickly. One of the simplest methods is to inject through the hole a small quantity of puncture fluid consisting of liquid rubber or other viscous compound for carrying fibrous or other solid material for plugging the hole. A special tool resembling a miniature automobile grease gun and not greatly unlike a hypodermic needle is used to inject the solution. On removing the tool and inflating the tire the solution is forced back into the opening by air pressure where it immediately solidifies and effectively seals the puncture. As a preventive measure many cyclists inject sufficient puncture fluid through the valve stem to coat the inner surface of the tire and thus heal punctures automatically as they occur and prevent deflation of the tire. A section at the end of this chapter is devoted to puncture fluids, their composition and use.

Plug Repairs

In the early days of single-tube tires small punctures were mended by thrusting a thread of rubber, well solutioned, into the hole and clipping it off a little above the surface. Another method was to soak a piece of rubber in gasoline until it swelled and became soft enough to knead like putty. This was rolled to a point between the fingers until it could be thrust through the hole, when the part sticking through could be squeezed up against the inside around the hole, making a rubber rivet which did good service if allowed to dry.

This method resulted in the manufacture of molded umbrella and flat head repair plugs of rubber in several sizes which are convenient for mending large and medium sized nail hole punctures. They consist of a cylindrical stem a little longer than the thickness of a bicycle

tire with a broad thin umbrella-like head at one end to form a patch on the inside of the tire. As this patch is cemented in place, a tighter repair is assured and there is no danger of the plug being blown out. These plugs are made in the following sizes, the first dimension being the diameter of the head and the second that of the stem: 2 by 1-2 inches, 1 1/2 by 7/32, 1 1/4 by 3/8, 1 by 5/16, 3/4 by 1/4 and 1/2 by 3/16.

In using these plugs, the under side of the head but not the stem is coated with a cold cure repair cement and allowed to dry. An area around the puncture inside the tire is also cemented with a tiny swab of cloth on a bent wire and allowed to dry. The head of the plug is then grasped in a slender pair of pliers, or special tool designed for the purpose, and forced through the puncture. The pliers or tool are withdrawn and the plug is drawn back to bring the umbrella head into firm contact with the inside wall of the tire. Pressing the tire down against the rim assures better adhesion. Some plugs have a smaller head on the outer end of the stem to facilitate pulling the umbrella head back into contact with the tire, while others have a strong thread run through the cylindrical stem near its end for the same purpose. The tire is then inflated and the outer end of the plug cut off flush with the tire.

Cuts in Single-Tube Tires

Cuts through the fabric, as distinguished from nail holes, require reinforcement of the carcass and vulcanization in a sectional mold.

All of the rubber from around the tire is removed about one and one-half inches each side of the injury, thus exposing some three inches or more of the fabric. One-quarter inch in from the remaining rubber one ply of fabric is then removed from around the tire, and the fabric and ends of the rubber are buffed lightly. The edges of the injury are trimmed and all loose particles and dirt are removed from inside the tire, after which the inner wall of the tire around the injury is thoroughly cleaned with gasoline. If the hole is large enough this may be done with a piece of muslin stretched over one finger, otherwise with a little muslin bound around a slender stick with a blunt end. A coat of vulcanizing cement is then applied both inside and out and allowed to dry for about ten hours. The cement will set so that it will not run after ten or fifteen minutes, when the tire may be hung up to dry with the injury either up or down.

A piece of combination repair sheet is cut about twice the size of the hole. This repair sheet consists of cured gum coated with uncured gum and is furnished both in small cartons and large rolls, the latter

for the professional repair man. After removing the holland gauze the patch is doubled, raw gum side out, and grasped over the fold with a slender pair of pliers. It is dipped in gasoline and then inserted through the hole inside the tire with the raw gum surface out, the gasoline acting as a lubricant. After allowing the patch to dry five minutes, the wall of the tire is pressed down upon it with the thumb and forefinger followed by rolling to insure complete adhesion. A pencil mark in the center of the patch will help to place it.

The cavity is filled flush with the fabric, using 3-64-inch unvulcanized repair gum strips cut to fit. The tire is then slightly inflated to round it out and the repair reinforced with a strip of eight-ounce frictioned fabric cut on the bias wide enough to extend half an inch on each side of the hole. This is wrapped tightly around the tire so that the ends will overlap at least one-half inch on the rim side. A second ply of fabric cut so as to abut the rubber at each end is then wrapped around the tire with the ends overlapping one-quarter inch on the rim side. Finally the section is covered with a strip of unvulcanized repair gum 3-64-inch thick, rolled and stitched carefully to remove all blisters.

For curing, the tire is placed in a sectional mold, inflated to riding pressure and heated according to instructions furnished with the repair materials used. Thirty minutes at fifty pounds steam pressure is a common cure.

Cuts in Double-Tube Bicycle Casings

Double-tube clincher bicycle tires are little used in America, but are common abroad. The inner tubes are repaired exactly the same as automobile inner tubes. Repair of the casings is as follows.

A small square of the rubber tread is cut about three-quarters of an inch larger than the hole. The inside of the casing is washed with gasoline over an area two inches larger than the removed section of the tread outside. Two coats of vulcanizing cement are applied inside and out, drying each one hour. Two stepped plies of eight-ounce frictioned fabric are then applied to the inside of the casing over the hole, rolling them carefully and firmly into place. Outside, one ply of frictioned fabric is applied the size of the cut-down, followed by a strip of unvulcanized repair gum to fill the cut-down flush. Each side of the repair is then cured for ten minutes on a flat press.

Puncture Fluids and Self-Healing Devices

The invention of pneumatic tires naturally involves other inventions providing for the healing of punctures and rendering punctured tires air tight under riding pressure.

These secondary tire inventions are important and run parallel with pneumatic tire development. The history of the subject shows that the prevailing need of the motoring public has been well met along several distinct lines of development. These are:

1. Puncture fluids for closing ordinary punctures and porous surfaces against escape of air pressure.
2. Self-healing devices incorporated in the inner tube structure.
3. Puncture closing tire tread construction.

Many puncture fluids that effectually stop air leakages do so merely by plugging the openings with solid material carried by a viscous flowing vehicle such as molasses, glycerine and the like. Some preparations may exert a deteriorating influence on the rubber with which they come into contact; others lose their value by drying out; still others interfere with subsequent permanent repairs by vulcanization.

An ideal puncture fluid should meet the following specific requirements in order to be fully acceptable as an anti-leak material. It must remain intact during the life of the tire; it must not harden when exposed to cold or evaporate when subjected to heat. The fluid must have an affinity for rubber, and adhere to every part of the interior of the tire, coating it about 1-16-inch, but without affecting the resiliency. The compound must be of such consistency as to automatically and instantly seal the puncture when forced into the opening by the air pressure.

The fluid should permit of easy vulcanizing and plugging, should a puncture occur that is too large to be healed by the fluid; the work of the repairman should be as easy as if the compound were not present. Finally, the fluid should contain nothing to injure the rubber, but rather should preserve it.

The practical tests that one puncture fluid manufacturer gives to determine the quality and beneficial effect of such materials are worth noting.

Test No. 1. Determine the absence of water in the fluid by heating a weighed amount of it in a crucible for two hours at 212 degrees F. There should be no loss by evaporation.

Test No. 2. When subjected to temperatures far below zero F. there should be no solidifaction even when the test is prolonged.

Test No. 3. A sample of the fluid confined for several months in a pure rubber inner tube should exert a marked preservative action on the rubber, evident by comparing the rubber that confined the liquid under test with a similar sample not exposed to the influence of the fluid.

Many of the puncture fluids on the market will not meet these tests, yet all have their advocates as shown by numerous testimonials of satisfied users who endorse the manufacturers' claims for their products. Judging by what is said by both maker and user there is little to be desired not already found in the puncture fluids current in the market today. Briefly, all the manufacturers announce the complete success of their products, of course, and without drawing any invidious distinctions, typical and authoritative accounts may be recorded of tests in demonstration of the claims made. In one instance a touring car carrying four passengers was run repeatedly over a pair of planks bristling with the upturned points of 350 two-inch wire nails. The car was twice brought to rest on the nails and started from that position. After these many punctures in the inner tubes the car continued to be driven without any measureable loss of pressure in the tires.

Official tests on a certain puncture fluid made and certified by the Testing Department of the Automobile Club of America are quoted as follows:

In the test, the left front and the right rear tires were treated with the compound by pumping in 3 pints through the valve opening with an instrument similar to a grease gun. The valves were removed in order to permit of the ready admittance of the fluid and after it was put into the tubes the valves were replaced and the tires inflated in the usual manner. The size of the tires was 34 by 4.

After inflating the tires a short run of 2 or three miles was taken to distribute the material throughout the tire. The pressure in the front left tire was 80 pounds to the square inch, which is in accordance with the amount specified by the tire manufacturer, and that in the rear was 65 pounds.

Sixteen nails were driven into the two tires, eight in the front and eight in the rear. In the front shoe six of the nails were 1.25 inch long and .125 inch diameter and two 1.25 by 5-64-inch. Each of these nails in the front shoe was immediately withdrawn and the punctured part of the tire turned toward the bottom to allow the fluid to enter the puncture. The nails were driven into various parts of the tire, some being directly in the center of the tread and others offset considerably from the center. After the punctures were made and the fluid had time to seal the leaks the tire was again reinflated to 80 pounds.

In the rear tire there were driven five 1.25 by .125 nails, two 1.25 by 5-64 nails and one nail 1 by 1-16. These nails were not removed and after each puncture was made the wheel was removed to give a similar effect to that on the road when a nail is picked up and the car

continues to go ahead. The pressure in this tire after the eight nails were forced in had dropped 2 pounds, from 65 to 63.

After standing in the clubhouse for 15 hours the inflations were again measured and it was found that the rear tire retained the same pressure, 63 pounds and the front tire had dropped from 80 to 55, a loss of 25 pounds. The front tire was again reinflated to 80 pounds and the rear was left at 63 pounds. The car was then taken on a test run to Bridgeport, Connecticut, from the clubhouse in New York City, a run of 56.8 miles over good roads. After arriving there the tire pressures were again measured and that of the rear still remained at 63 pounds while the front had dropped to 76, a loss of 4 pounds.

Before starting on the return trip five of the nails in the rear tire were removed and the pressure fell to practically atmospheric. A considerable quantity of the sealing liquid squirted from the punctures upon the removal of the nails. It was found impossible to reinflate the tire until three of the nails were replaced. This was done, the tire was inflated to 70 pounds and the car was started on its journey back.

After again reaching the clubhouse the left front tire retained the 70 pounds pressure per square inch, a drop of 6 pounds during the run and the right rear 39 pounds, a loss of 31. Another period of 14 hours was allowed to elapse and measurements taken showed that the front tire retained the 70 pounds pressure and the rear tire had dropped 3 pounds more, to 36 pounds.

The tires were then deflated and examined. It was found that the punctures were not enlarged in the tubes, but in the rear casing the holes had been considerably enlarged through running with the nails still in the punctures. In the front tire where the nails were not in the casing during the run there was no enlargement of the holes in the casing. As the tires would not hold inflation after this no further tests were made. A summary of the results of the test follows:

	Pressure, pounds per square inch	
	Right Rear	Left Front
Before puncture	65	80
After puncture	63	78
Reinflated to		80
After standing approximately 15 hours	63	55
Reinflated to		80
After running 56.8 miles	63	76
After running 113.6 miles	39	70
After standing approximately 14 hours	36	70
After examining tubes inflated to	66	50

The views of tire manufacturers are not, as a rule, favorable to the use of puncture fluids, as will be noted in the opinion indicated below from a leading tire maker who took strong exception to their use.

Stating that for years it has been known to tire makers that a sticky compound on the inside of a tire would close small holes, the assertion is made that the majority of these compounds contain ingredients that prevent the cement from holding when it becomes necessary to make a vulcanized repair. In view of these facts tire manufacturers do not extend their guarantee to tires in which such compounds have been used.

Regardless of both praise and blame puncture fluids have held their own since their appearance in the nineties and unquestionably have been a boon to users of pneumatic tires.

Claims Made by Manufacturers

"Suitable for all pneumatic rubber devices such as tires, footballs, air cushions, etc." "Cannot dry and will last the life of the tire."

Over 150,000 users are said to favor a certain form of bicycle tire puncture fluid, guaranteed to stop air leakage at any hole up to that made by a six penny nail.

Claims are put forward that the elastic quality of rubber is actually improved by several of the anti-leak preparations while in one instance it is asserted that the composition not only prevents puncture but strengthens the rubber, decreases the liability to blow-outs and rim cutting. These effects are attributable only indirectly, however, due to preserving the pressure of the tire inflation. Another strong claim is that by perfectly retaining the air pressure from 12,000 to 15,000 miles can be obtained from any good tire. Tires fail by being run deflated. This means broken fabric, rim cuts and blow-outs. This maker guarantees his preparation to keep the air pressure up to standard and to replace the user's entire set of casings if the preparation injures them in any way.

How Puncture Fluids Are Put Up and Applied

For the convenience of users the various puncture fluids are put up in collapsible tubes or compression top tins containing from four to twelve ounces of preparation ready for application.

Typical methods for treating leaky tires with puncture fluids or anti-leak preparations are given below, selected from the suggestions published by various reliable manufacturers.

To treat a tire with any of the liquid rubber compounds, remove the wheel from the vehicle. Remove the valve plunger from the valve,

see that the ball valve in the hand pump has been removed and that its plunger has a perfectly free opening. Thin the rubber compound with gasoline or other solvent to about the consistency of a syrup that will work through the hand pump smoothly without any great effort. Fill the pump and force the compound into the tire with the valve stem at the bottom of the wheel, and repeat this operation, two, three, four, five, or six times, depending upon the condition and size of the tire. Then revolve the wheel slowly, that the liquid may have a chance to flow freely over the inner surface of that part next the tread.

To make sure that the liquid will reach the side walls of the tire, lay it flat on the floor for five or ten minutes, then a few slow revolution, and again lay it flat upon the floor, but with the other side down.

While the tire is on the floor pump it up to about half the normal air pressure, deflate it and revolve the wheel slowly; again repeat the inflation and withdrawal of air to further evaporate any volatile solvent. If one has the patience this process should make a satisfactory job.

In case the puncture fluid is one of the sort consisting of a fibrous material suspended in a viscous vehicle like glycerine, glucose syrup or the like it may be found that the tire fails to hold the air properly after using the compound. Here more fluid is needed, as there may not be a sufficient quantity of fiber in a small amount of compound to fill all the leaks. This has been found to be the cause of many supposed failures and putting in more compound makes a success of the repair. Rubber plugs or rubber elastic bands are recommended for use in conjunction with compounds of a fibrous nature for the repair of large punctures.

A heavy preparation will require to be heated by immersion for an hour in boiling water in the can containing it. It will then have the consistency of molasses and may be pumped into the tire which is to be revolved until the composition sets, forming a coating that does not harden but retains the characteristics of crude rubber, causing punctures to be self-healing.

Cost Per Tire

Average cost per tire for applying typical puncture fluids.

Brand	Per Tire
Liquid Rubber	$2.00
Rubberine	2.50
Anti-Puncture	2.50
Kor-Ker	2.75
Ligtening Fluid	3.00
Innersealum	3.00

Puncture Stop	3.50
Prest-O-Seal	3.50
Puncture Plugger	3.75
Inner Seal	4.00
Air-inal	4.00
Triple P. Compound	4.00
Inner Tube Seal	11.25
Tireoid	14.00

Typical Puncture Fluid Mixtures

The reader interested in the manufacture and use of puncture fluids will find instructive the formulae that have been employed in their manufacture. In general the products are preparations of viscous liquid containing mineral or organic pulp of some sort which forms an air stop by packing tightly into the puncture, the viscous material smearing and adhering to the rubber surfaces.

Glucose and Pyroxylin Mixtures

Cyco is a mixture of glucose and water containing whiting and carbolic acid. The odor of the latter is masked by the addition of oil of mirbane.

Pyrolin, an English preparation, consists of the following materials in the proportions stated: Pyroxylin, 10 grains dissolved in 1 1-2 ounces each of amyl acetate and amyl alcohol and mixed intimately with 12 ounces of glycerine.

Gum and Wax Mixtures

Lyman's compound is: Five grains of boracic acid, one-quarter ounce of caramel, sixteen ounces of water and ten of a gummy substance such as dextrine, gelatin, gum arabic and gum mesquite.

The Tulreyhouse and Anderson composition consists of glucose, flour, gum arabic, and water in specified proportions.

Griswold's tire healing compound consists of water, flour of slippery elm, gum tragacanth, and an antiseptic preservative.

Campbell's formula: Water, two quarts; granulated cork, four ounces; talc, one pound; white lead, eight ounces, and gum arabic, two ounces.

The Weber and Clemen's mixture is: Beeswax, 1 ounce; paraffine, 2 ounces; rosin, 2 1-2 ounces; linseed oil, 1-2 ounce; ground cork, 2 ounces, and disintegrated asbestos, 2 ounces.

Glycerine Mixtures

The Parks puncture fluid is a mixture of minute vegetable seeds suspended in glucose and glycerine.

Moore's compound is composed of glue, glycerine, water and chloroform in specified proportions.

L'Heretier recommends a composition of the following ingredients: glue, 34 parts; gelatin, 8 parts; golden syrup or treacle, 27 parts; glycerine, 27 parts; tannin, 4 parts.

Gaa advocates three different formulas.

1. 30 pounds of an alkaline solution and 10 pounds of a shellac solution are mixed with a solution of 30 pounds of glycerine, 10 pounds of dextrose and 10 pounds of India rubber in 18 quarts of water, under constant stirring. The resulting fluid mass is then stirred or agitated until it begins to jelly.

2. 10 pounds of powdered gum ammoniac are emulsioned with 10 pounds of India rubber powder and 9 quarts of water. To the resulting emulsion there is added 20 pounds of glycerine. In place of the gum ammoniac, galbanum may also be added or a solution of gutta percha may be employed.

3. 20 pounds of cellulose are boiled, preferably under pressure, for 5 or 6 hours with a solution of 100 pounds of rubber in 182 quarts of water, and then concentrated to 300 pounds. 100 pounds of glycerine and 100 pounds of dextrose are further added. The cellulose may also be replaced by an equivalent quantity of any of the above mentioned bodies.

The Bestie and Bilger composition includes glycerine, fuller's earth and plumbago in specified proportions.

Jewett's compound consists of glycerine, a farinaceous powdery substance, a metallic oxide and graphite.

The Allen mixture is composed of finely rendered graphite, comminuted asbestos, and a pulverized substance, as magnesia, whiting or the like, in about equal proportions, together with a sufficient quantity of glycerine to render the same semi-liquid.

The patent claims for Duryea's "Never-Leak" are generally considered as covering the whole field of puncture fluids. In his patent the statements of the inventor are in part as follows:

Among the liquids, gums or compounds used with greater or less success are thin liquid glue or thick mucilage combined with sufficient glycerine to ensure the glue remaining fluid when exposed to the air within the tire. He also closed leaks successfully by the use of flour within the air tube, converted into a paste by the injection of a small quantity of water. The patent claims, of which there are seven, provide for the combination with the air containing tube of pneumatic tires, of a gummy liquid contained therein and designed by re-

distribution due to movement of the tube to form an interior coating adapted to be forced by escaping air into leaks in the air-containing tube. The cement or sealing agent which remains normally in a liquid state hardens on exposure to the outer air to effect the sealing of a rent.

Rehmentlau's mixture consists of a collection of loose particles certain of which are relatively large and spherical in form, and others of which are relatively small and of irregular form, the particles being adapted automatically to close punctures in the tire in which they are contained under the action of the fluid pressure therein.

The Howe and Langley puncture fluid is a mixture of 1 part by volume of silicate of soda and 3 parts by volume of glycerine, neutralized by adding acid with constant stirring. The jelly formed is mixed in a mortar with 3 additional parts by volume of glycerine and the composition is injected into the tire. When the tire is punctured, the air in its endeavor to escape carries some of the composition to the hole and stops the leak. Aluminic hydrate may be used instead of the silicate, and water thickened with dextrin or mucilage and sufficient calcium chloride to prevent evaporation, or any other suitable non-oleous liquid may be employed to hold the gelatinous particles in suspension.

Another Howe and Langley formula follows:

The liquid forming the body of the composition may consist of mucilage or any other gum, or of a solution of starch, dextrin, or the like, with which some deliquescent material may be mixed and gelatine may be added if desired. In this liquid gelatinous material is held in suspension, the substance preferably employed being gelatinous silica, or aluminic hydrate. The gelatinous silica is prepared from commercial liquid water-glass and the aluminic hydrate from any salt of alumina. Threads, about 1-32-inch in length, of cotton, wool, asbestos, spun glass, or other filamentous bodies may also be carried in suspension.

Young's composition consists essentially of about five parts by weight of gelatine, glue, or the like and about five parts of pure glycerine. These relative proportions may be varied slightly, and a small proportion of water may be added, if necessary, in order to give the composition the consistency at ordinary temperatures of a firm sticky jelly. Heat may be employed when forming the composition.

Other Mixtures

Permanit is a powder to be pumped into the tire. After the required amount of powder has been injected, depending, of course, on the size of the tire and its use, whether for car or cycle, 1 1-2 ounces

of clear water are added for each package of powder. The wheel is then rotated slowly 10 to 20 times in order to scatter the contents in the tire. Permanit does not dissolve in water nor does it become a paste, glue, or fluid; but when a puncture occurs the powder comes in contact with the outer air and causes a chemical reaction, whereby the injured part is instantly healed. One treatment will last at least a year. It is one of the virtues of the compound that a tire can be vulcanized with the material in it and that the powder can be transferred also from one tube to another, if desired.

Garza's composition consists of the extract obtained from boiling guayule and candelilla plants in water to which is added asbestos and fuller's earth.

Elder advises a mixture of paste, plaster of Paris, chalk, a perfume, alcohol and bismuth subnitrate.

Noll and Shepherd make a puncture fluid of equal parts by volume of distilled water and alcohol; to each gallon of mixed liquid is added three ounces, by weight, of a filler, such as paper pulp and silk fiber, the liquid serving to carry the fiber and pulp to a hole in a tire whereby a mat is formed to bridge the hole.

Crockford's mixture consists of hair with a liquid, such as water mixed in suitable proportions to distribute throughout the tube of a tire.

Du Cane prepares a puncture fluid by boiling 64 parts of water with 207 parts of sugar, and adding thereto 9 1-4 parts of starch with 12 parts of water. The whole is covered with 2 parts of burnt sugar mixed with 16 parts of water, and for large tires a small quantity of wood pulp may be added. Methyl or wood naphtha may be added.

Watkinson's formula is: One part by volume of treacle and either one or two parts of French chalk. Oil of cloves and coloring matter optional.

The Weintraub-Schnorr mixture is an aqueous solution of waterglass, sugar and dextrine.

Du Cane's composition contains sugar, 207 parts; starch, 9 1-4 parts; water, 92 parts; and a coloring matter.

One of the best preparations is a sticky fluid brought out in 1898 by a leading English tire manufacturer who thus described the material: It consists of a viscous, but not oily, fluid, which is injected into the inner tube. In this fluid there are suspended numerous small granular particles, and when a puncture occurs one or more of these granular particles, in an endeavor to escape, is conveyed to the aperture, which it promptly closes. By this means, pin pricks, thorn punctures, and all small injuries to the inner tube are automatically cured. The rarer

kind of injury, such as bad cuts from glass bottles or other sources of severe damage, will not be closed by the material, as the incision in such cases is too large for the granular particles to fill up, but such wounds must be patched with rubber in the ordinary way, with one additional precaution, namely, that the liquid must be worked away from the seat of injury inside the tube before solution is applied to the surface of the tube. The patch will not adhere where the tube is moistened with the stop, which must therefore be removed, in the same way it is necessary to remove the grey reposit from the air tube whenever an ordinary repair is executed.

Self Healing Tires

Among the effective means for preventing loss of pressure by puncture of a pneumatic tire a few typical preparations will be mentioned.

One such, known as "Self Healing Balm," is a plastic composition located between the two plies of a rubber inner tube, thickest at the center of the tread of the tire and reducing to nothing at the center of the side walls.

Shaw's self healing compound is applied in a layer to the tread of an inner tube. The preparation is covered by a layer of rubber, and the whole is then cured in a vulcanizer at a temperature of 280 degrees F. When a puncture occurs the air in the tire forces the scaling compound into the hole, making an automatic repair.

Dunn's self healing tire has a hermetically-sealed cell located at the tread side and completely filled with a non-solid substance out of contact with air, and another non-solid substance contained within the tire in juxtaposition to but out of contact with the first mentioned substance. These substances are adapted to form a clot when brought together by means of a puncture.

Rubberette is a special puncture self-healing composition which it is claimed is not affected by heat or cold and renders a tire absolutely puncture-proof. It is located inside the inner tube on the tread surface and takes up one-eighth of the air space. It is vulcanized to and becomes a part of the tire itself.

Rubber Puncture Fillers

Tetmechy's compound is composed as follows:—Pure rubber, 120 grains; vulcanized rubber ground fine, 60 grains; cotton fiber, short, 10 grains; carbon bisulphide, 1370 grains. The compound is used for injection into punctures. The fiber gives sufficient cohesion to the mass after it has hardened to obviate the plug blowing out.

Gline's Liquid Rubber seems to have been nothing more than volatile rubber cement sufficiently heavy to repair punctures without the use of plugs.

Chemical rubber, so called, is made by a secret liquid formula designed for injection by pressure into the inner tube of automobile tires, and when finally set resembles rubber. It is claimed by the makers to be much longer lived, much more resilient and preservative.

Wanklyn's mixture of comminuted sponge rubber with the usual powders, liquids, or semi-liquid mixtures is used for automatically sealing punctures. The mixture may be made into pellets coated with glue and be applied as a plug to the puncture.

Park and Hignett employ an elastic viscous composition consisting of melted India rubber, chalk, meal and glycerine.

Sherbondy's formula is: Infusorial earth, 14 pounds; rosin oil, one pint, flour of sulphur four pounds; air slaked lime, four ounces; carbonate of ammonia, two pounds; baking soda, one pound.

Puncture Repair Preparations

American

Air-in-al
Anti-Puncture
Biko
Chemical Rubber
Cyco
Inner Seal
Innersealum
Inner Tube Seal
Kor-Ker Puncture Fluid
Lightning Fluid
Liquid Rubber
Liquid Tire Tonic
Never-Leak
Nodelay
Nu-Rubber
Orolo Puncture Proof
Permanit
Prest-O-Seal
Puncture Filler
Puncture Plugger
Puncture Stop
Puncture Seal
Pyrolin
Rubberette
Rubberstone
Sealo
Achutt Compound
Tire Balm
Tircoid
Tiresele
Tire Treat
Triple P. Compound

English

Alodium
Miraculum
Puncture Stop

CHAPTER XLVI

REPAIR SHOP MACHINERY AND EQUIPMENT

The Repair Shop

In the repair of motor tires, hand work plays such an important part that a repair shop can be set up with a comparatively small outlay of capital. In fact, the investment in tools need not be greater than in a country carpenter's or a blacksmith's shop. For an extensive tire repairing outfit, however, it is better to have a small engine or motor for driving the buffers, wrappers and air pumps, and

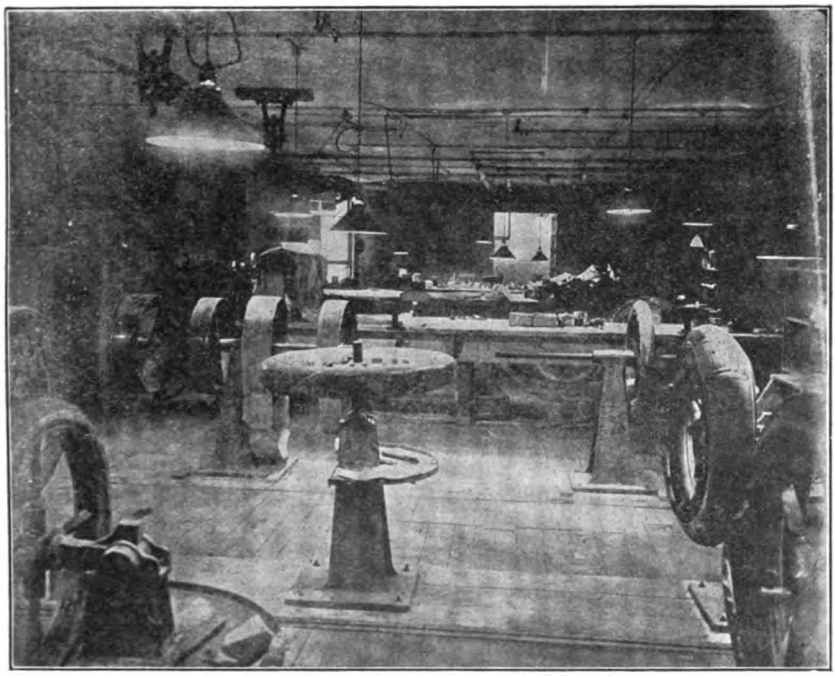

Typical Automobile Tire Repair Shop

a boiler to furnish steam for vulcanizing; but aside from these limited uses of power, everything depends upon skillful fingers and painstaking care.

For about $750 a tire repair shop can be equipped for doing all classes of work on all sizes from 30 by 3 to 37 by 5 and giving free

air to patrons. Exact prices will vary somewhat with the make of equipment chosen, but will average about as follows:

One 3-3½ Combination mold, section and retread	$ 85
One 4-4½ Combination mold, section and retread	95
One 5-5½ Combination mold, section and retread	105
One Steam generator	60
One Inner tube vulcanizer	15
One Inside patch vulcanizer	22
One Combination tread roller, peeler and applier	60
One Buffing stand	33
One Emery wheel	10
One Wire brush	12
One Rotary rasp	12
One Air compressor and tank with fittings	75
One 1-H. P. Motor	125
Two Tire lasts	10
One Kit of tools, including skiving knife, stock knife, flat roller stitcher and shears	6
One Set air bags	25
	$750

In fitting out a repair shop, the first thing is to get a long, wide work table with a smooth top and put it in the middle of the room. Along one side of this bench fix several block mandrels or wooden forms of different sizes, corresponding to prevalent types of tire used. These should be strong, so that when a tire shoe is hung on, one will not be afraid to do hammering, if necessary. These block forms fit the inside of the shoe, and are as necessary in a tire shop as an anvil in blacksmithing. All casing repair work is done on them, from the simple opening of a sand blister to an out and out retreading, although for the latter purpose a regular tire rebuilding stand is preferable. The mandrels should be fastened along only one side of the work table, leaving the other side clear. On this table is spread the stock to be cut up as needed, and the frictioned duck for stepping and retreading. On one end of the bench there should be a small vise or two, and an extension bar over which to hang inner tubes for examination.

Around the walls are pegs and shelves a-plenty, because these are always useful. In one corner of the room should be a work bench for mending tubes, with an extension bar, over which to hang the tube

while patching. A tube deflator for exhausting the air prior to making a repair is often a time saver. A tank of water for finding punctures and testing tube repairs, also a vulcanizer for tube work come next, with pegs on which to hang tubes before and after repairing. A simple vulcanizer for tube work consists of a long, flat topped platen with weights, springs or clamps to hold the repair firmly in place, a pressure gage and perhaps a safety valve. There are inside patch vulcanizers for curing fabric reinforcements, cavity vulcanizers for sectional work on treads, and kettle vulcanizers in which one wrapped casing or several casings may be vulcanized in open steam. A large shop, of course,

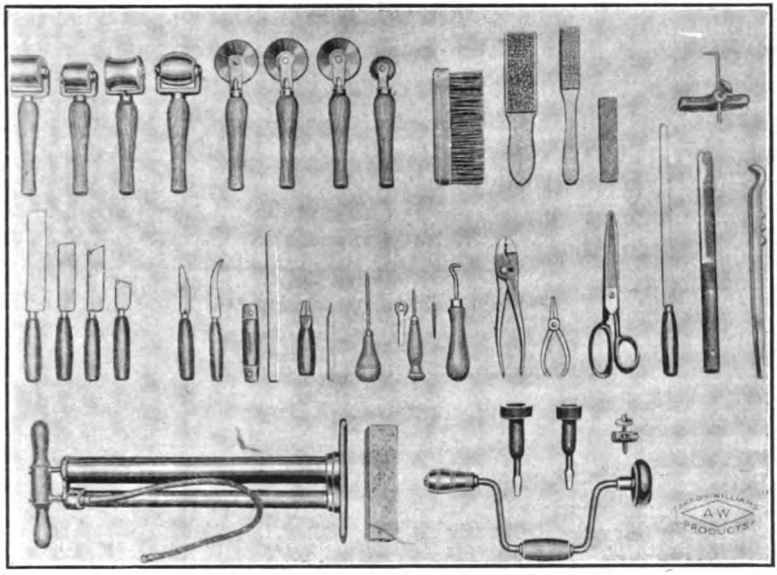

TOOLS USED IN TIRE REBUILDING AND REPAIRING

means large vulcanizers. For small shops a complete repair plant consisting of a two or three-cavity vulcanizer for sectional repairs or retreading, an inside patch vulcanizer, a tube plate and a self-contained steam generator are combined in one piece of apparatus.

A buffing machine, which consists of a shaft with an emery wheel on one end and a brush wheel with wire bristles on the other is also necessary. The emery grinds off the rubber rapidly, while the buffer brushes the canvas clean for the reception of the cement. In this work, as in most other parts of tire repairing, one needs several very sharp, thin bladed knives, rasps and pliers, also a bowl of water in

which to dip the knives frequently. Long bladed shears are necessary for cutting the canvas and sheet rubber.

An important tool is the stitcher, which is simply a little fine toothed wheel fastened to a handle. This is used in retreading, in stepping in, for applying leather treads, and for almost every other operation in the shop. There are also the flat, concave and convex hand rollers for rolling repaired surfaces solidly together. A safety container of gasoline should be conveniently placed on the tube repair bench. For cleansing and roughening the surface around a burst in a tube, the buffer serves best.

The riveting machine for studding leather treads needs no special description. A lever is pushed down with the foot, and the plunger thrusts the rivet through and clinches it. A power pump and a tank for compressed air are necessary, and muslin bags of powdered soapstone should be kept conveniently at hand, to give the finishing touches to any tire repair.

The tire repair business has shared in the rapid increase of the automobile and tire industries and many special machines and appli-

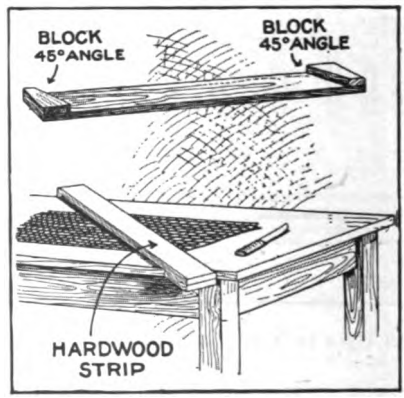

A Home-Made Bias Cutter

ances have been developed for rapid and perfect work. The present chapter is limited to the principal types of repair shop equipment that are most essential for the work.

Bias Fabric Cutters

In small repair shops cutting fabric on the bias is done with a wet knife instead of with shears. A straight edge like the one shown in the illustration, with blocks that have 45-degree edges nailed to either

end, is used. These edges even up against the edge of the table and secure a perfect 45-degree cutting angle. The device is simple, but very effective. The straight edge can be made in a few minutes.

MILLER BIAS FABRIC CUTTER

The Miller bias fabric cutter is a very useful machine for repair shops where a considerable volume of work is done. It is operated by a hand crank, or a power attachment can be applied if so desired. As the fabric is taken from the roll, the liner is automatically wound up

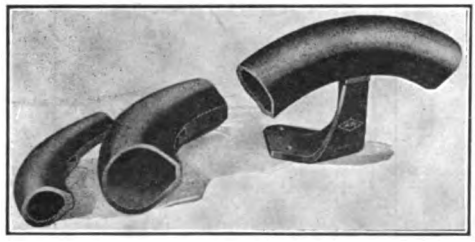

TIRE LASTS

on a roller. The machine being set for the required width, fabric is fed between the knives and by pressing down the foot lever a strip is accurately cut off on the bias.

TIRE LASTS

The tire last is indispensible for supporting the tire while making fabric repairs. It is made of cast iron, the shape of the inside of the casing with convenient brackets for attaching to the bench.

Tire Building Stands

For rebuilding or retreading tires the tire building stand is standard equipment. For this work it is usually provided with a collapsible core, as shown in Chapter XVII. The stand is fitted with an automatic locking device that holds the core securely in any desired position, so that the tire can be revolved in either direction or inclined at any angle.

Kettle Vulcanizers

Relines, recovers, rim-cut repairs, plain retreads and retread bands are all vulcanized either in a kettle or a horizontal vulcanizer, or else in a retread mold.

In plants where these repairs are done on a moderate scale, vertical pot heaters or kettle vulcanizers are usually employed, owing to the small steam consumption and relatively small installation cost. Although varying considerably in details as produced by different manufacturers, all vulcanizers of this type are alike in principle.

Akron-Williams Kettle Vulcanizer

They are usually supplied in two different diameters varying in capacity from two to four tires. Generally they are of the simple kettle type, although the annular construction is particularly economical of steam for a small installation, and will repair from two to four casings at one heat, according to size, from 28 by 2½ to 37 by 5 inclusive. Others have bolted-on lids or heads held in place by eight to eighteen hinged bolts fitting into slots in the edges of the kettle and lid.

There is also a boltless, quick-acting lid which is opened and closed by revolving the head about 8 inches on a central trunnion, the head being supported against pressure by lugs coming in contact with companion lugs on the door frame. Some lids are raised by a screw, chain block

AKRON-WILLIAMS RETREADING KETTLE

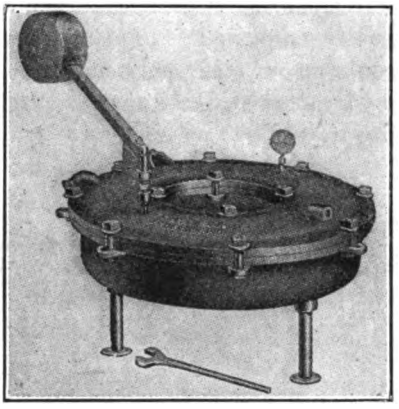

MILLER KETTLE OR POT VULCANIZER

or weight and swung to one side on a crane or overhead track; others are hinged and counterbalanced. Where the lid and the vulcanizer come together the surfaces are machined and grooved to accommodate a standard square packing ring. Medium size kettles average 37½ inches inside diameter and have a depth of 10 to 26 inches with a

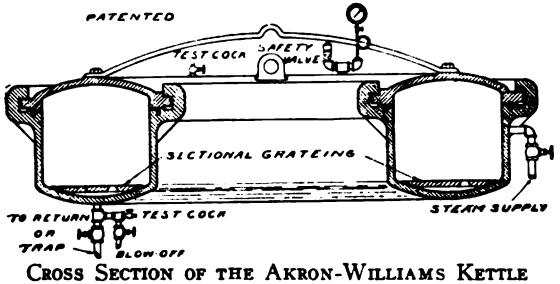

CROSS SECTION OF THE AKRON-WILLIAMS KETTLE

capacity of two to seven casings 36 inches in diameter or smaller. Large kettles average 43 or 43½ inches in diameter and have a depth of 16 to 31 inches with a capacity of four to seven casings 42 inches in diameter or smaller. The regular equipment includes a steam gage, safety valve, two test cocks and supporting legs. There is sometimes a

bottom grating to keep the tires out of the water from condensed steam and to permit steam circulation all around the casings.

Horizontal Retreading Vulcanizers

In repair plants where considerable retreading is done a horizontal retreading vulcanizer capable of taking care of all size casings is usually employed. These vulcanizers have a bolted-on, hinged door requiring no overhead tackle or counter-weight. They average 46½ or 47 inches inside diameter, 40 inches in length and have a capacity

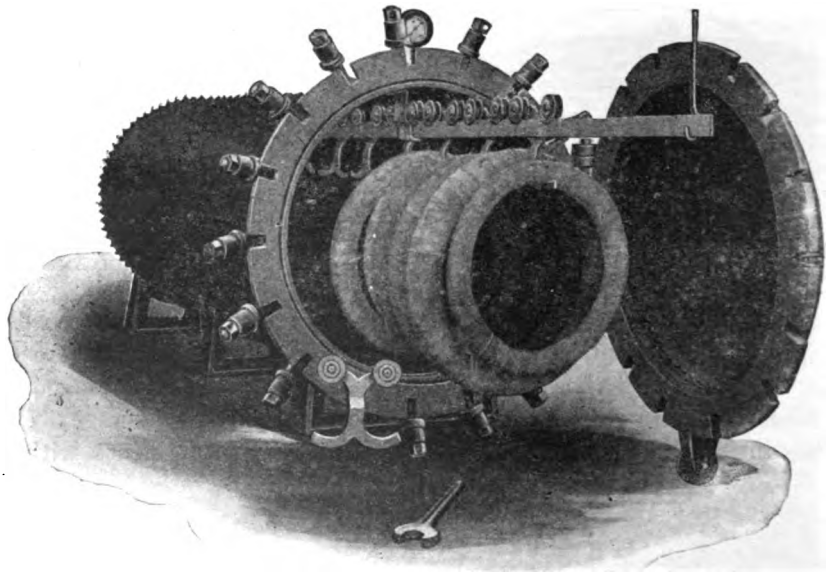

Biggs Retreading Vulcanizer

of six to eight tires 42 inches in diameter or smaller. The equipment includes an inside overhead tire arm, two mounting stands for supporting the kettle, steam gage, safety valve and syphon.

The larger Biggs vulcanizer, for example, is used where a big retreading business is done. An inside overhead track carries the trolleys from which the tires are suspended. A removable outside track connects with the inside track and is supported by a hanger suspended from the ceiling. The grooved trolleys which carry the tires are made of forged steel and can be fastened together by hooks. This allows

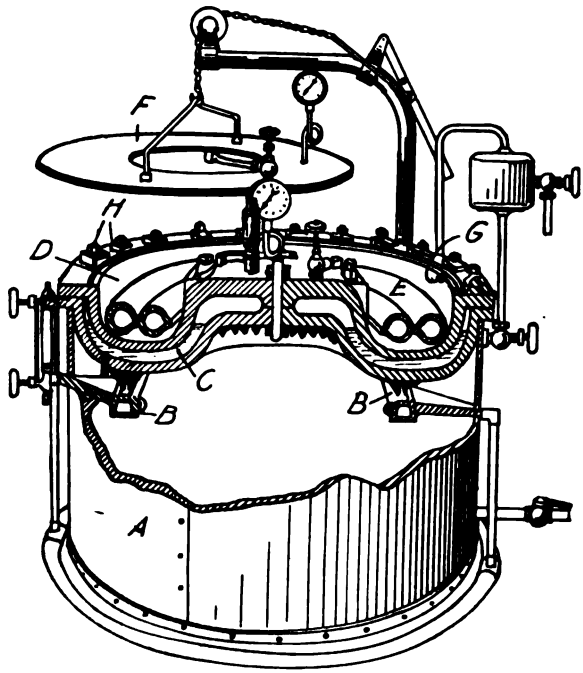

FROST RETREADING VULCANIZER

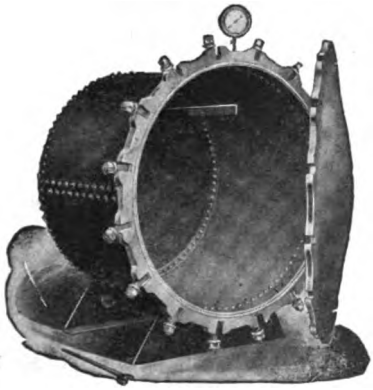

HORIZONTAL RETREADING VULCANIZER

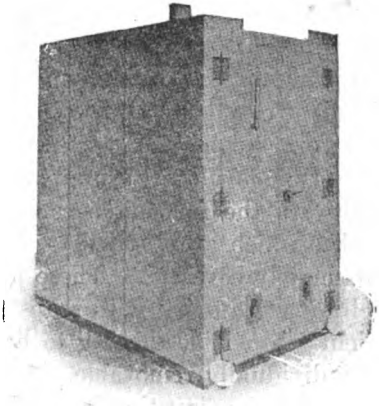

MCEWEN VACUUM VULCANIZER

the train of trolleys to be operated as a unit. These retreading vulcanizers are made with an outside diameter of 48 inches and from 6 to 12 feet long.

The McEwen patented portable vacuum vulcanizer for rubber tires has for its chief characteristic the absence of steam in its operation but is claimed to be capable of producing a higher and better heat for vulcanizing rubber, fabric, leather, or other materials into a homogeneous mass without injury than any other system in use. It is stated that a heat from 1 to 500 degrees F. can be obtained readily with positive regulation in a very short space of time. The idea is that this vulcanizer facilitates the recovering and repairing and also the building of automobile tires, and is cheaper in operation than a steam plant. It is economical in space occupied. There is no bolting of any door or cover required in opening or closing the apparatus; either the opening or closing is accomplished with one operation.

In the Frost retreading vulcanizer used in garages and repair shops, the base *A* is the heating chamber containing an annular burner *B*, placed directly under the boiler *C*. The vulcanizing compartment *D* accommodates one or two tires *E*, and is closed by the cover *F*, which closes over a gasket *G*. The cover is locked in place by bolts and clamps *H*. The vulcanizer is fitted with water level gage, thermometer, steam gage and the necessary control valves. Steam can be raised in twenty minutes and tires removed without cooling the vulcanizer.

Annular Air Bags, Retreading Coils and Rims

When these open steam vulcanizers are employed, whether of the kettle or horizontal type, a complete air bag or an endless retreading coil is placed in the casing to hold the latter in shape during the cure. Complete air bags made of specially treated gum and wound with fabric will give from 100 to 300 cures.

To avoid permanent stretching through repeated use, the Fenton air bag has a plurality of removable layers of fabric and rubber, preferably in the form of a series of sets of overlying or superimposed patches which are applied to the outer surface of the bag so as to approximately cover it. These patches are applied with cement after a preliminary dusting with soapstone so that while they will adhere sufficiently to enable the bag to be handled in the ordinary manner they are individually removable.

After the first tire is cured thereon an outer patch (or patches) is removed, thus decreasing the dimensions of the bag by a small amount, but sufficient to compensate for the permanent stretch of the bag. This

process is repeated until all the layers or patches are removed, at the end of which time the bag has reached the limit of its stretch.

Endless retreading coils will last indefinitely, being made of specially tempered hard steel flat wire well vulcanized. They are made long enough to accommodate casings of any diameter, being wound so that they may be opened or closed to fit the different diameters. To insure a perfectly smooth surface, a fabric pad should be wound around the coil.

Adjustable cast iron or aluminum segment cores are often used instead of air bags or coil springs. They are the exact size and shape of

FIRESTONE ENDLESS AIR BAGS

the inside of the tire. Each segment is 1-2-inch thick at the inside and 5-8-inch at the outside, making them conform solid to the circle of the average tire. A sufficient number of these segments is strung on two wires to go nearly around the casing, and the adjustment between the different casings is made by using more or less segments. Where the coil spring gaps apart to conform to the diameter of the casing, these cores lie tight one against the other so that the casing can neither shrink nor stretch in curing. It is claimed that the shape of the case keeps the points of the beads straight and prevents separation of the fabric by pressure on both sides of the casing.

When retreaded tires are to be cured in open steam, split curing or retreading rims, with clincher or straight-side beads as required, are put in place upon the casing and the two halves clamped securely together by screwing the bolts down tight. A strip of wet muslin cut on the bias at an angle of 45 degrees is then stretched around the casing lengthwise as a surface liner, and over this a heavy jacket also soaked in water. In the case of a recovered tire the light muslin jacket is put on before the curing rims.

Retread Molds for Ribbed or Non-Skid Treads

A retread mold for curing one casing at a time, especially where a ribbed tread is desired, stands at convenient height on three legs and is

Retreading Mold

very economical of steam. The beads and side walls are not subjected to any steam whatever that might impair the fabric through over-curing or cause separation of the beads. No wrapping is required, and as the pressure of the mold is everywhere uniform, no edges of the plies nor low spots will be visible, nor will the tread be loose as sometimes happens after curing in a pot heater because of careless wrapping.

The use of a retread mold is simplicity itself. After the new tread has been applied in the usual manner, an air bag is placed in the casing and the casing is mounted on an ordinary rim. The top half of the mold is raised, the casing is placed in the mold and the two halves

are bolted together. The air bag is then inflated, steam is turned into the mold, the drip cocks are opened and the casing remains in the mold until cured. When removed from mold and rim the tire has the appearance of a new casing.

One of the advantages of the retread mold is that, all pressure being outward during the cure, every cord in a cord tire and every thread in a fabric tire is tuned up to an even tension so that each cord or thread of the finished product carries its equal share of the load. Every ply does its share and there are no wrinkles or buckles to cause one ply to work against another and cause a break.

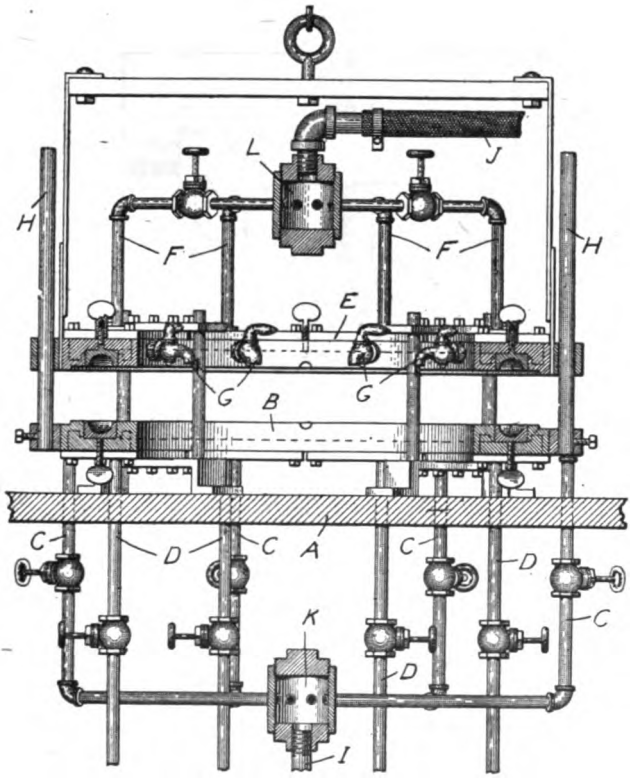

CHAMBERLAIN CYCLE TIRE VULCANIZER

Chamberlain's vulcanizing apparatus for repairing pneumatic cycle tires is so constructed that steam may be applied along a short section of or around the whole body of the tire. Upon the frame *A* is mounted an annular ring *B*, constructed in eight sections, each being

hollow and forming a steam chamber which is provided with inlet *C* and outlet *D*. Above the ring *B* is another ring *E* which is also built in eight sections, provided with steam chambers having inlets *F* and outlets *G*. Each of these steam inlets and outlets is provided with a control valve so that steam may be admitted into any one chamber or into all of them simultaneously. The upper ring *E* slides on rods *H*, so that when it is lowered into position the mold sections of the upper and lower rings register. The tire receives vulcanizing heat only at that section of the mold surrounding the repair. Provision is made for inflating the tire and to press it outwardly against the walls of the mold during vulcanization. Steam for the vulcanizing rings *B* and *E* is sup-

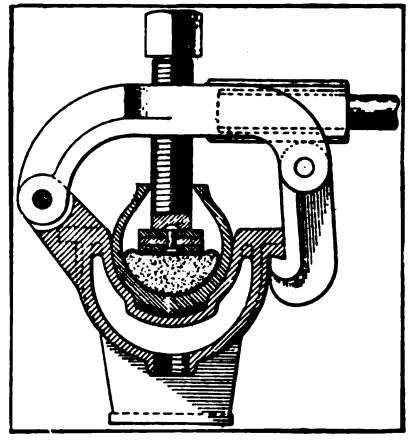

WESTERN RETREADER

plied from common pipes *I* and *J* and these pipes empty into steam chambers *K* and *L*, each having eight outlets for connection with the pipes *C* and *F*.

The Western retreading machine will produce various non-skid tread designs, including the Silvertown ribbed tread. A new feature is the multiple-spring pressure plate and centering blocks that effect an even distribution of the curing pressure.

There are two molds to a complete outfit, retreading tires from 28 by 3 to 37 by 5. The equipment furnished with each set consists of six lever clamps, two multiple-leaf pressure springs, two sand bags, one clamp lever, one matrix bolt wrench, one ratchet wrench, six centering blocks, four disk globe-valves, and all pipe fittings, etc., ready to connect to the steam line.

The accompanying illustration shows a similar French type of steam vulcanizer with sand bag for repairing casings. The apparatus comprises the mold *A*, which on the inside conforms to the shape of the tire. The walls are hollow, constituting a steam boiler *B*. The device is set on cast iron legs which are provided with lugs *C* for attaching gas, alcohol or other burners. Two screw presses are mounted in the stirrups *D* attached to the sides at *E*, so that they press down

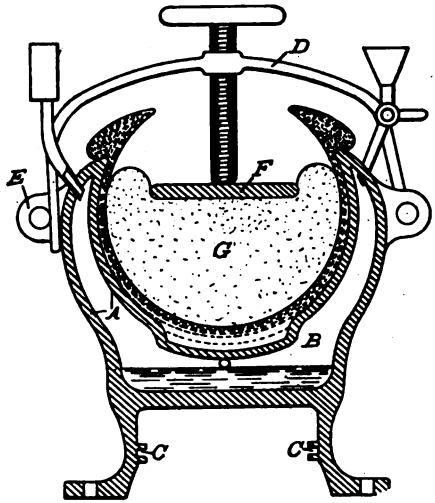

STEAM VULCANIZER WITH SAND BAG TEMPLATE

on the plate *F* and rest on a pad *G*. This pad consists of a bag of sand, which conforms to the contour of the tire and holds it firmly against the hot surface of the vulcanizer.

TWIN RETREAD MOLDS

With twin full-circle molds two casings may be cured simultaneously, both of the same size or two neighboring sizes, such as 30 by 3½ and 31 by 4, according to the construction of the molds. They may be provided with ribbed or special non-skid tread designs. The molds consist of three members, each cored to receive steam. The center member is stationary, mounted on edge and supported by braced legs. It has one-half of each mold machined on either side, while each of the two outside hinged members has the other corresponding half. Steam is admitted to all three members by means of pipes at their lowest points so that condensation in the molds

is removed by the same pipes. The two outside hinged members have hinged swing steam joints directly under the main hinges and can be opened and closed at will without escape of steam. The usual air

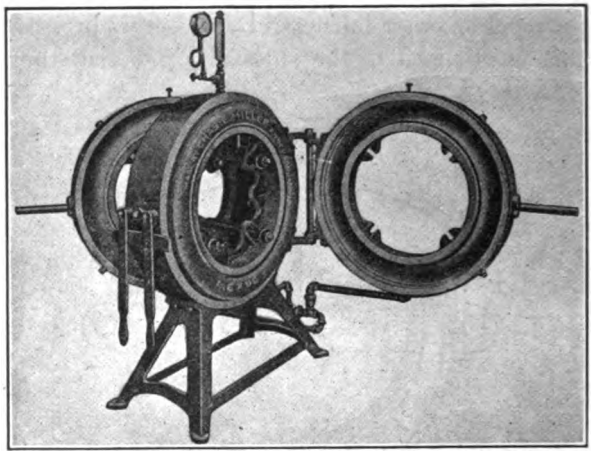

TWIN RETREADING MOLD

cocks, steam gage and thermometer are provided. Four bolts hold the three members of the mold together. Circular air bags are placed inside the casings and inflated to 125 to 150 pounds pressure during the cure.

CAVITY RETREAD MOLDS

To avoid the somewhat heavy investment required for kettle vulcanizers with separate steam boilers, when retreading is done on a moderate scale, the cavity retread mold is used. It is similar in operation to the ordinary sectional cavity vulcanizers for curing tread repairs, but is made to cure one-third instead of one-fourth or one-fifth of a 36-inch diameter circle. One-third of the tread is vulcanized at a time, the entire tread being cured in three operations. A few of the larger size casings require four cures. As wrapping is entirely dispensed with, it is claimed that a complete retread can be cured as quickly with a cavity outfit as with a kettle.

The cavity retread mold will retread tires from 2½ to 5-inch. It has two cavities, one 3½ and 4-inch, the other 4½ and 5-inch, the former cavity being provided with a reducing shell for 2½ and 3-inch casings. The self-contained boiler, equipped with steam gage, safety valve and water gage, generates its own steam to full pressure in 20

to 25 minutes, and with gas in only a few minutes longer. When gasoline is to be used as fuel, a pressure tank with copper tubing is required so that a connection may be made from the outside of the building if necessary to conform to local fire regulations. The tanks are usually supplied in 10-gallon size with air pump, hose connections, air gage and 12 to 20 feet of copper tubing, end fittings, valves, etc. The greatest possible amount of heat can be obtained from a given quantity of gasoline by this system, and low air pressure maintains an even flame.

Similar retread molds are available in three sizes, and there is also on the market a four-cavity en-bloc retread mold with two cavities

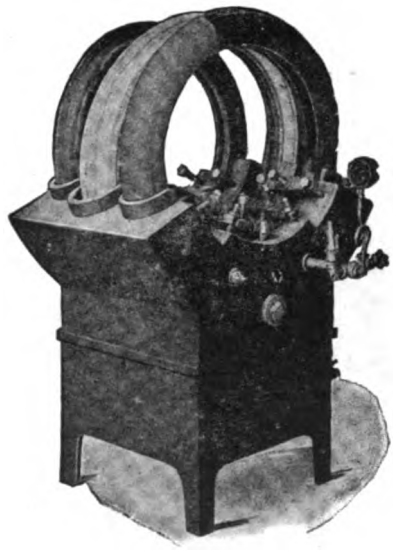

ZWEBELL CAVITY RETREAD MOLD

for 4-inch casings in order to double the capacity for this most popular size. All cavities of the latter outfit have insulated air-cooled flanges which entirely do away with the unsightly and damaging bump so often seen at the ends of repaired sections of casings.

An objection to the principle on which all cavity retread molds work is the fact that parts of casings larger or smaller than 36-inch are subjected to a double cure. As the circumference of a 36-inch diameter circle is 113 inches, while the circumference of a 30-inch casing is only 94 inches, it is obvious that when such a casing is placed three times in the mold for curing, 19 inches of the casing is subjected to a double cure.

The Zwebell cavity retread mold is of the en bloc type, having three one-third circle cavities with a cross section of 3½, 4½ and 5¼ inches, respectively, and will handle any size of tire from 28 by 3 to 38 by 5½ inches. The cavities are deep enough to cure the tire over the beads when desired. The ends of the cavities are provided with semi-curing flanges, to guard against any breaks in the cure. The boiler is self-contained, using gas or kerosene as fuel to generate steam.

The raised centers of the side of the cavities are so constructed that with the use of air bags and standard bead molds a section can be cured in the same manner as in regular sectional molds in rib, or with a pad in either plain or non-skid design.

The machine is adapted to build rib-style, non-skid or plain treads; also tread bands may be cured on and half-soles and double treads applied quickly and efficiently.

The Zwebell high-pressure tire retreader is a self-contained sectional tire vulcanizer designed for effective duty and provided with a

ZWEBELL HIGH-PRESSURE RETREADER

large factor of safety. The boiler shell is ¼-inch thick and the crown sheet is 5-16-thick and contains six 1-inch tubes. All boilers are tested to 200 points, under hydraulic pressure steam test before being shipped. Two types of burners are supplied, a gas burner or gasoline burner that generates in less than five minutes and will raise 50 pounds steam pressure in 35 minutes.

The molds are all milled in a special machine built for that purpose and are very smooth in finish. The ribbed tread type of mold being the most popular. The highest grade of equipment is furnished with each mold, including a woven fabric bag, spring bar, socket and ratchet wrench.

High-pressure retreaders are made in three sizes for curing 4½ and 5-inch tires; 4-inch tires; and 3 and 3½-inch tires.

Among the advantages claimed for the Soper high-pressure retreader are: wood fiber marking blocks that keep the rubber from overflowing; semi-cure, keeping the rubber from overcuring on the lap, which often causes a weak spot on the retread; no matrix to break, as

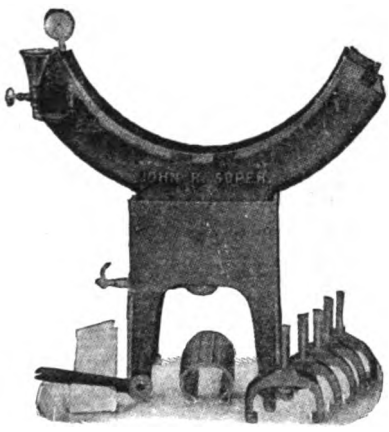

SOPER HIGH-PRESSURE RETREADER

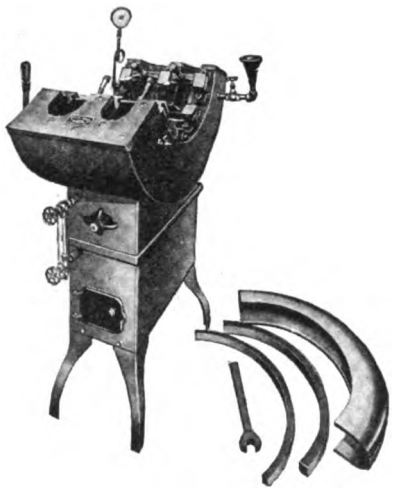

AKRON TYPE E RETREADER

the ribs are cut in the mold; inclosed firebox, giving four times the heating surface found in ordinary molds and making steam up to 50 pounds possible in 20 to 25 minutes; hand-forged clamps that are practically unbreakable.

The vulcanizers have self-contained gas-heated boilers, although kerosene burners can be supplied if desired; and they are made in six types, suitable for the smallest oil station or the most completely equipped retread shop.

The Pacific tire repair mold is a retread mold and sectional vulcanizer that can not only cure maximum size tires, including cord tires, in its one-third-circle matrix, but with bead molds, which can be supplied,

sections may be vulcanized in the same mold as readily as in the ordinary sectional vulcanizer. It has a self-contained boiler, full steam-jacketed walls, and raised steam-jacketed center section to take bead molds when using it as a sectional vulcanizer. Non-heat-conducting blocks on the ends of the mold prevent the stock from flowing, blister-

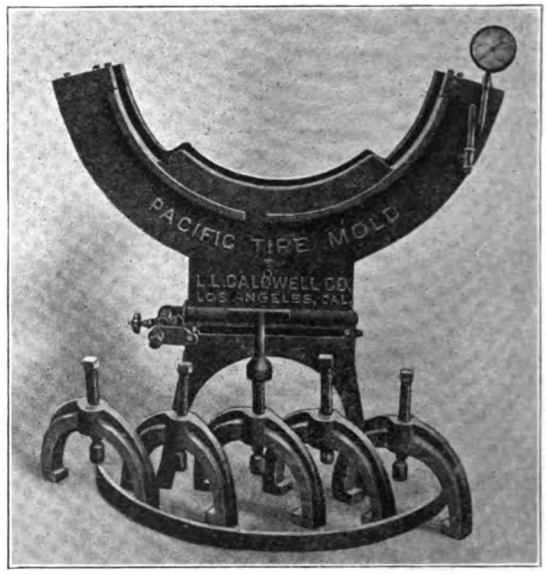

PACIFIC TIRE REPAIR MOLD

ing, or leaving a burr on the ends of a cure. The rib tread is machined in the solid casting; and, it is claimed, the retreaded tire has the appearance of a new cord tire.

The complete unit includes five strong steel clamps, gas burner, steam gage, safety valve, overflow valve, filler, filler valve, spring steel pressure band, wrench, and mill hose sand bag. If desired, connections can be provided for steam plant line, or for gasoline or kerosene gas burners.

The Akron Type *E* retreading equipment will retread tires from 2½ to 5 inches and consists of two ribbed tread cavities, 2½ to 4-inch and 4½ to 5-inch, and a plain tread reducing shell for the 3½ to 4-inch cavity which will cure 2½ to 3-inch tires. It is made in 1/3 circle. can be heated by gas or gasoline and includes steam gage, water gage, safety valve and steel bands.

The Wilkinson cavity retread mold is equipped with an aluminum non-skid or ribbed-tread matrix and a radiating insulated flange to protect the tire from over-curing at the laps. It has a self-contained

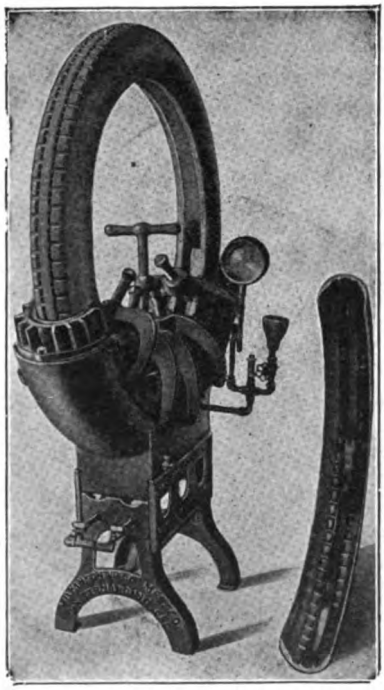

WILKINSON RETREAD MOLD

boiler and is also equipped with steam safety valve and gage. There are three models, H, K and L.

SECTIONAL CAVITY VULCANIZERS

Sectional cavity vulcanizers for curing outside fabric and tread repairs consist of one to five molds, steam jacketed around the cavity, cast en bloc or singly, and made in either one-fourth or one-fifth circle to measure from 15 to 18 inches long on the tread. Three, four and five-cavity outfits are most common, and will accommodate all casings from 2¼ or 2½ to 5-inch. The molds are mounted on substantial metal stands of convenient height, and some are equipped with a self-contained boiler. Separate molds of different sizes, each standing on short metal legs for mounting, on a wooden bench, are often assembled according to local requirements with pipe connections. With a separate mold

for each size casing, no reducing shells are required; direct contact is always had between the hot walls of the vulcanizer and the casing, and there is no uncertainty as to the evenness of the cure.

Each cavity is equipped with a set of either Q. D. clincher or straight-side bead molds as ordered, and a hand-screw clamp to adjust the pressure on the casing. Adjustable molds in halves not bolted together fit new and old stretched casings equally well without cooking an offset at each end of the mold, as the molds simply slide up a little higher on the straight polished surface of the vulcanizer and never pinch or wrinkle the fabric or otherwise damage it. Variation in the size of different makes of casings is also taken care of by adjustable molds. Valves in the pipe line permit steam to be admitted to any

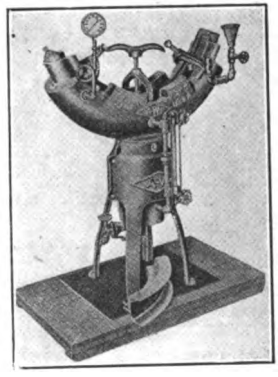

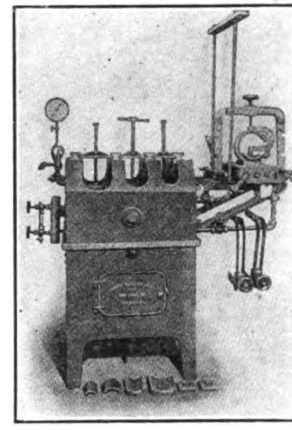

TWO TYPES OF THE SECTIONAL CAVITY VULCANIZER

mold or molds desired, or to all at once, while a steam gage in the pipe line indicates the pressure in any molds in use.

The following cut shows a vulcanizer having three separate steam chambers of different sizes used for tires from 2½ to 5 inches in size. The length of each curved section is one-fifth of a circle, measuring about eighteen inches along the tread. All sections are connected so that steam may be applied to one or more sections as desired.

Air-cooled flanges are a feature of one make of sectional cavity vulcanizer. They prevent the unsightly and damaging bumps commonly seen at the ends of repaired sections of the tread. One-eighth inch of heat-resisting material is placed between the flanges and vulcanizer, causing both ends of the cavity to keep cool while heat is main-

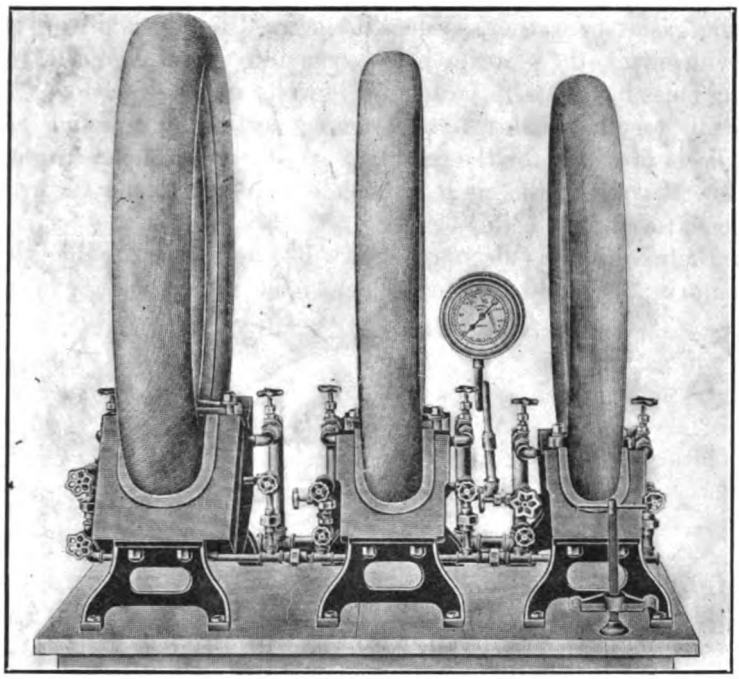

STANDARD TIRE VULCANIZER

tained up to this insulated heat resisting material, thereby keeping the casing cool at the ends of the repaired sections of the tread.

Sectional vulcanizers such as the Miller cavity enbloc sectional vulcanizers, are frequently furnished with an inside patch vulcanizer and tube vulcanizer on the same stand, while four or five-cavity outfits often have two or three molds of the same size, thus increasing the capacity for popular sizes, such as 3½ and 4-inch casings.

The Miller combination adjustable sectional vulcanizer is of unique design and made in capacities from one to six cavities inclusive. It is furnished with an assortment of adjustable steam jacketed tread and bead molds, to be placed between the movable steam jacketed side walls. The assembly of parts can be changed in a few minutes to meet the requirements of the work in hand. Molds are made in sizes from 1½ to 5-inch inclusive. The surfaces of all side walls, tread and bead molds are accurately machined to make perfect contact. All tread molds are cored to receive steam with a hole passing through from one side to the other. Around this hole a chamber is milled 1½ inches in diameter and ⅛-inch deep on either side of the tread molds to take

a packing gasket or washer. When the desired tread molds are placed in the vulcanizer, these steam holes come into direct line with corresponding holes in the steam jacketed side walls and the various parts are held firmly together with a tight steam connection by screwing up two hand wheels provided for the purpose. As the steam holes are located at the lowest point of the circle, all condensed steam water drains back into the self-container boiler below.

A British garage vulcanizer shown by the accompanying illustration comprises a round bottom boiler *A*, the upper portion of which

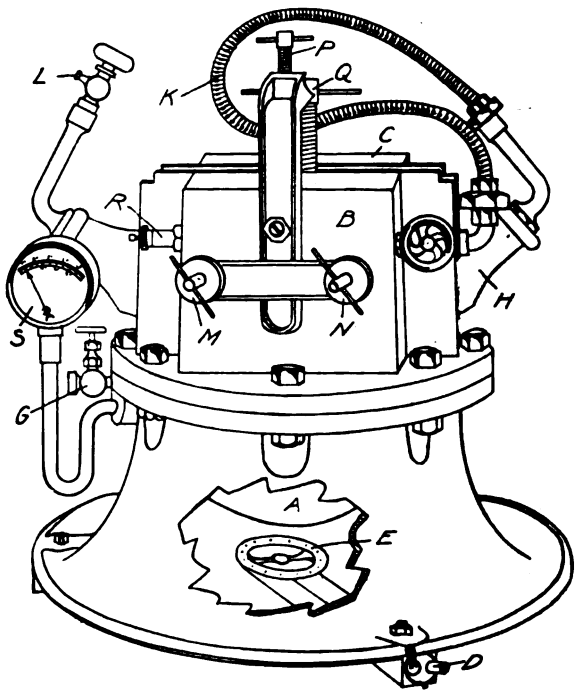

A British Garage Vulcanizer

terminates in two parallel steam chests *B* and *C*, planed on their tops and sides to form convenient vulcanizing surfaces. The bottom of the channel between the steam chests is cast concave to conform to the curvature of tire casings. Gas is supplied to the machine at *D*, connecting with the burner *E*, which is placed directly under the boiler. Water is supplied through valve *G*. The mandrel *H* is used for casing repairs, and is provided with a flexible steam connection *K* and blow-off valve *L*. *M* and *N* are separate screw presses attached to the plate B, used for

repairing inner tubes. Another screw press *P* is attached to the top of the plate *B*. Directly under this in the steam plate, is a hole to accommodate the metal valve of an inner tube while being vulcanized. The screw press *Q* is used for holding the mandrel *H* in place when used for casing repairs. *R* is a safety valve and *S* is the steam gage.

The Thropp repair vulcanizer consists of a steam-chambered mold *A* in the shape of a segment of a circle, mounted on a stand *B* and having a separate steam-chambered core *C* to support the interior of the tire casing. The core is supported by the clamps *D* and *E* and carries two bead molding rings *F*. The tread molding section of *A* overlaps the bead molding rings *F* and rests upon the body of the tire during vulcanization. The core *C* and the tread mold *A* are provided with steam inlet pipes *G* and *H* respectively, receiving steam supply through the main pipe *I*. The steam is exhausted from the core and mold through pipes *J* and *K*. In operation, the tire casing is placed on the core *C* and the injured part repaired. Then the side plates *F* are clamped in position and the tread vulcanizing mold *A* is lowered upon the casing. Steam is admitted and heat maintained until vulcanization has taken place. The mold is then lifted from the tire, the side plates *F* removed

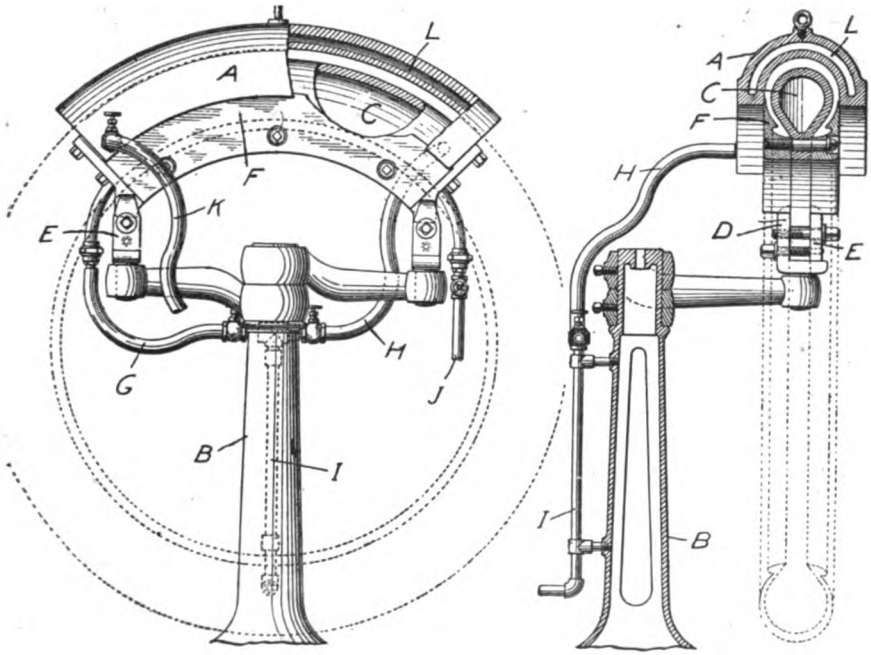

THROPP REPAIR VULCANIZER

and the tire taken from the core. The weight of the mold provides sufficient pressure during vulcanization.

Pneumatic Truck Tire Vulcanizers

The introduction of the giant pneumatic tire has opened a new field in the tire repair business, requiring large sectional vulcanizers. They are made in sizes to fit 6, 7 and 8-inch tires, respectively, each vulcanizer equipped with one pair of straight-side bead molds.

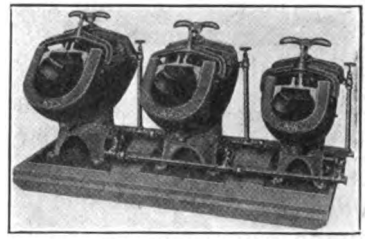

Truck Tire Vulcanizer

The Dri-Kure truck tire retreader is a combination retreader and sectional mold built in five sizes to accommodate all the regular giant pneumatic tire sizes from 36 by 6 to 48 by 12, and will cure all kinds of repairs on sizes of tires for which it is designed. It is built in an upright position, greatly facilitating the inserting and removing of the tire from the mold. A downward pressure easily rolls the completed job out onto the floor. The central position forms a full one-fourth circle sectional cavity which with head plates and an air bag will completely cure sections in one operation. With a rib matrix inserted, full retreads may be given the rib impression while curing. Without the matrix, plain round retreads built up from raw gum may be cured. Or by filling the tread depressions with soapstone, non-skid bands of any pattern may be supplied. The retreader is completely equipped with gas or kerosene burner, pressure gage, clamps, etc. If a separate boiler is preferred, the necessary threaded holes are tapped in the mold for both the feed and return connections.

Inside Patch Vulcanizers

Inside patch vulcanizers made in one-fourth or one-fifth circle come in small, medium and large sizes; the small size for casings up to 4-inch inclusive, the medium for 4½ and 5-inch casings, and the large for 5½ and 6-inch casings. They are of smooth cast iron, designed for

mounting on a bench or stand, and have suitable steam pipe connections, valves and pet cocks to release cold air from the last. A triangular

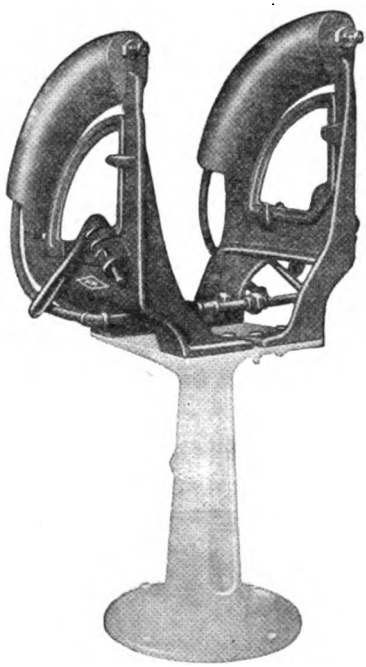

INSIDE PATCH VULCANIZER

frame within the supports, together with one or two thumb or crank screws or nuts provide the necessary bandage tightener.

STEAM CURING BAGS

By the use of a steam-cure repair bag, such as the "Twentieth Century," in connection with a sectional cavity vulcanizer, both inside and outside cures can be made simultaneously, thereby saving time and obviating the danger of over-curing. This device resembles and replaces the usual sectional air bag, consisting of a short segment made to fit the curvature of the tire and supplied with steam through the pipe connections at the ends. It is made entirely of metal with the exception of the curing surface of rubber, which will give from 200 to 300 cures and is easily replaced when worn. There is a large size to cure 6, 7 and 8-inch truck tires.

A similar British steam mandrel is made partly or wholly of flexible material, such as rubbered canvas, in order that the surface may

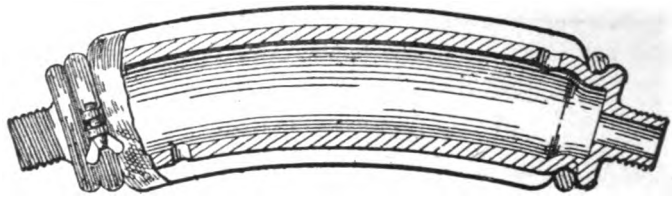

A British Steam Curing Mandrel

readily conform to the shape of the casing to be vulcanized. The metal mandrel is surrounded by a flexible cover fixed by steam-tight clamps. Steam is admitted to the inside of the jacket through channels in the metal part of the mandrel.

Expansible Sectional Mandrels

When only an outside cure is to be made in a sectional vulcanizer, there are several expansible cores or mandrels to be placed within the casing and press the latter against the hot walls of the vulcanizer.

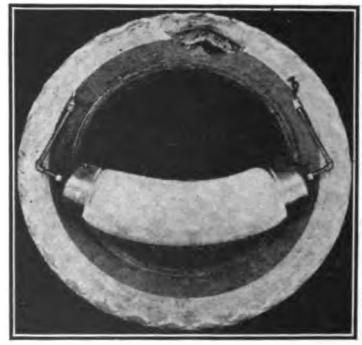

"20th Century" Steam Curing Bag

Dykes' mandrel consists of a plurality of separable mandrel sections curved to fit the interior of a pneumatic tire casing, so that the mandrel as a whole is curved in side elevation and practically cylindric when viewed in cross section. Toggle links connect the mandrel sections with sleeves on a rod having right and left screw-threads, the middle portion of the rod being eccentric and the threaded end portion of the rod being practically concentric to the cross sectional circumference of the mandrel. By means of a hand crank turning one of the sleeves through the agency of bevel gears, the rod is turned to move the sections apart or to draw them together.

The Hirsch expanding metal core comprises a plurality of arcuate members, a plurality of blocks each having a cam action with the members, an arcuate rod connecting the blocks together, a link pivotally connected to one end of the rod and a screw threaded engagement with one of the members and a ball and socket connection with the link.

The Hibbs expander is a very simple device consisting of only five parts, viz., a thrust plate shaped to conform to the curvature of the inside of the tire casing, two side plates to fit it, an expander lug, a threaded expanded bolt fitting the threaded hole in the lug and a ratchet wrench. Turning up the bolt with a ratchet wrench draws up the wedge shaped lug and forces the side plates apart, pressing the side walls of the tire against the walls of the vulcanizer.

Mott's patent pressure for vulcanizing, the device of a Danish inventor, has been adopted in a number of European cities. Being the same shape and size as an air bag, it will work equally well with any

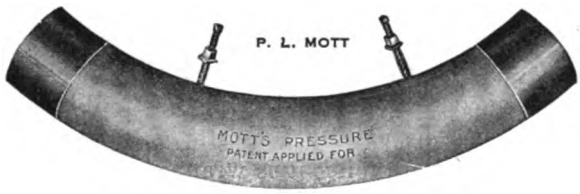

MOTT'S PATENT PRESSURE

vulcanizing machine. The pressure obtained is equal in all directions and may be brought to as high a point as desired without any fear of bursting, thus obtaining a more solid cure. Being constant, there are no air-blisters, while there is no air to leak out and spoil the work. The fabric inside the case is cured in the same time as the mold cures the tread. There are no springs or machinery to get out of order.

SECTIONAL AIR BAGS

In the air bag system of tire repairing, sand and steam cure bags, expansible mandrels and wire spirals are displaced by inflatable sectional bags. These air bags are made of fabric and rubber, and at one end have a tube and air valve through which air is forced into the bag. They come in different sizes—one for each size of casing. A machine equipped with air bag molds enables the operator to save time, economize on materials, and turn out a repair that can be guaranteed to outlast the rest of the tire.

The cross-sectional view of a three-cavity vulcanizer, herewith, shows how the steam is conducted to all parts of the three cavities of the air bag molds. Each cavity is so constructed that the steam enters at the lowest point, and rises to the highest, avoiding steam pockets. This

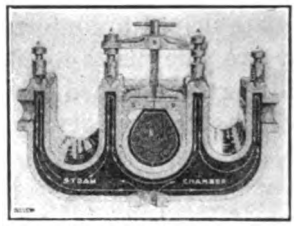

AIR BAG SYSTEM

construction renders all the molds self-draining. By means of reducing shells, various sizes of tires can be accommodated in the same mold cavity.

An unusual type of air bag known as the Standard consists of two metal cones, connected by a jointed rod. Each end has a metal cap, which fits over the cone, and is held in place by a lock nut. The bag is made ready for use by cutting a length of tubing to fit over both cones. After placing the tubing it is wrapped several times in cotton cloth. The metal caps are then screwed up so as to hold the tubing and cloth tightly on the cones. The jointed metal connecting rod takes the strain as the bag is inflated ready for use. The makers of this bag claim that they have had from 35 to 50 cures without recov-

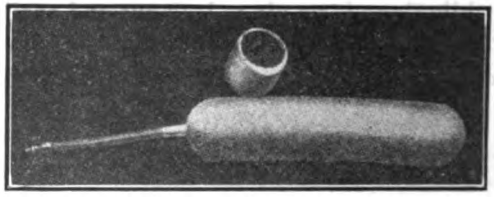

ORDINARY SECTIONAL AIR BAG

ering the bag, and that recovering it is only a matter of a few minutes' work, and requires only an old piece of tubing and some cotton cloth.

A similar air bag known as the Perpetual consists of a metal frame and a cover made from two pieces of scrap inner tube covered with stockinette. It is said that this bag will eliminate the use of pads and

last from forty to eighty cures. It can be quickly renewed in the following manner. Two pieces of tube are cut the length and size of the bag desired, and one tube is drawn inside the other. The tubes are placed over the frame that is held in a vise and the ends of the tubes tied to the ends of the frame with string. Two pieces of stockinette are applied over the tubes, the end cap placed over the stockinette and tubes, and the nut is tightened. The frame is then replaced in the vise at the tightened nut, the tubes and stockinette pulled over the other end of the frame, the cap applied and the nut tightened.

This bag is made in three, three and one-half, four and one-half, and five and one-half-inch sizes. The latter two take care of five and six-inch tires, respectively.

Inner Tube Repair Vulcanizers

Inner tube repairs are vulcanized under pressure, in contact with a steam-heated plate.

Adjustable and constant pressure is applied to the tubes while being cured by means of heavy oil-tempered springs, which draw down the swinging levers. A steel nut is placed inside the spring and the handle can be screwed in or out of the nut so that a pressure of six ounces or fifty pounds can be brought to bear on the repair. The adjustment can be changed in an instant.

Where solid screw clamps are used it is difficult to properly judge the pressure on the repair. Moreover, as the gum flows during the cure, the thickness of the repair is reduced, partly relieving the pressure on the tube patch. This undesirable result does not occur with the spring tension system.

A standard type of inner tube repair vulcanizer shown by the following illustration consists of a rectangular steam chamber, its upper surface finished and polished. The heating surface is eight inches in width and provided with three adjustable plates for holding the tubes in place while the patches are being vulcanized. These are hinged on a rod at the rear of the steam chamber and are quickly locked in place by means of the spring clamps at the front. These maintain a constant pressure on the tubes, and can be screwed in or out so that the pressure may be adjusted from 6 ounces to 50 pounds.

On the right-hand side of the following page is shown the Akron-Williams inverted tube vulcanizer, unique in its adaptation of a principle giving greater efficiency and ease of manipulation. The tube hangs down away from the heat during the cure. The pressure bars are controlled by foot pedals enabling the repairman to have both hands free to

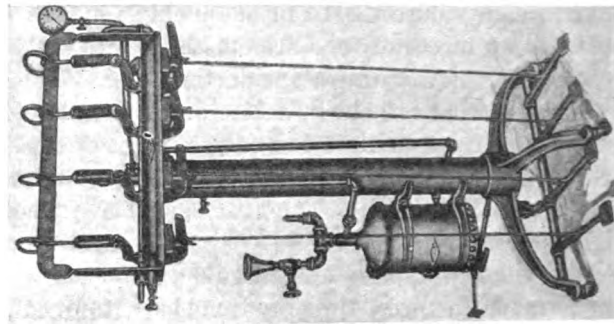

INVERTED TUBE VULCANIZER

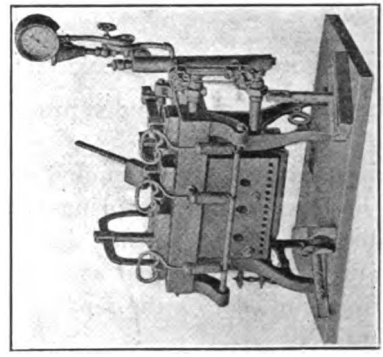

INNER TUBE REPAIR VULCANIZER

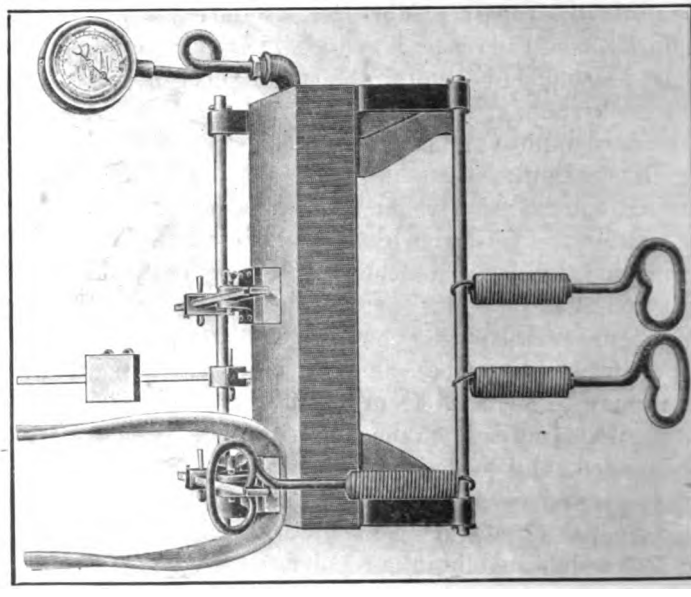

STANDARD TYPE OF INNER TUBE REPAIR VULCANIZER

adjust the tube on the hot plate. When equipped for gasoline as fuel this outfit may be pushed about the repair shop floor at the convenience of the operator.

Vulcanizers for Both Casings and Tubes

Many complete vulcanizing plants for both casings and tubes are to be found on the market. Some of them are for use with an independent source of steam, others have self-contained steam generators using gas, kerosene or gasoline as fuel, and there are also plants heated by electricity.

A vulcanizer of the earlier standard multiple type has a number of hollow heating beds or tables *A*, of various shapes and sizes, communicating directly with the steam chamber *B*. The steam enters at *C* and passes out at *D*, the pressure being recorded by a gage *E* and regulated by a relief valve *F*. Located above the steam chamber are a number of

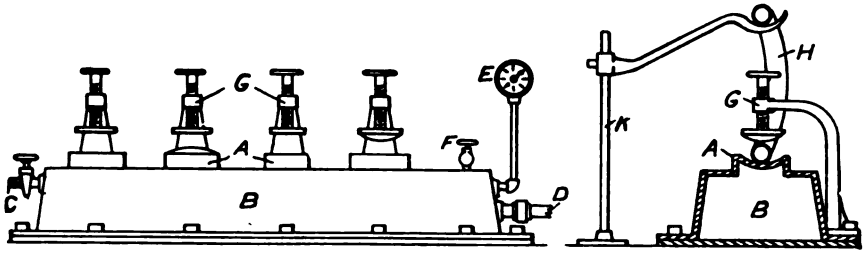

Multiple Tire Repair Vulcanizer

screw clamps *G* which hold the tires or tubes firmly in place. The drawing shows one of these clamps open to receive an inner tube *H*, which is suspended above the vulcanizer by the stand *K*.

The Hill-Stage, a more recent type, has a capacity of five casings, five inner tubes, one motorcycle tire and two bicycle tires at a single heating. It will take tires up to 5 inches in size, or the tubes of any size may be accommodated. This is a steam vulcanizer, being equipped with a jacketed boiler of large capacity and with either a gas or gasoline burner.

In the Anderson vulcanizer, using the sand bag system, the tire molds and tube plates that form the radiating system are so chambered that a uniform, predetermined degree of heat is maintained on all parts of the molds and plates at the same time. The machine is arranged to accommodate all sizes of inner tubes and casings up to and including 37 by 5 inches, thereby eliminating the necessity of various sized molds.

One of the Shaler complete vulcanizing plants utilizes electric current for heating, the heat being controlled automatically, as in a steam plant. An outside casing form, an inside casing mandrel and a tube plate are mounted on a tubular stand which contains all the electrical wiring, including separate switches to permit independent heating. Connection to the city current is made overhead through a plug at the

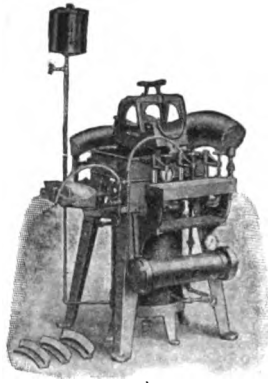

HILL-STAGE VULCANIZER

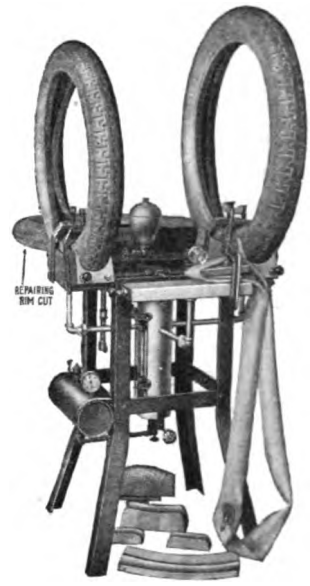

ANDERSON VULCANIZER

top of the upright standard by means of extension cord to any lamp socket. No special wiring is required as the entire apparatus consumes less current than an electric flat iron.

INNER TUBE SPLICERS

For splicing inner tubes after bad blow-out tears have been cut off, either with cold or acid cure cement, or for inserting new inner tube sections, several splicers are available.

The simplest of these, made by several firms, consists of a short piece of nickel plated tubing slit along its entire length on one side for removal. The tube is simply turned back over the splicer, brushed, and cement is applied in the ordinary way to both ends of the tube. When dry, the end with cement on the outside, is pushed up against the end that is turned back over the tube splicer. The tube is then

slightly inflated and by the aid of the tube splicer, which has been drenched in soapstone, the turned back section of the tube is forced over to the other end of the inner tube without touching the hands against any of the cemented surfaces. The tube is now spliced and the splicer can be removed by letting the air out of the tube and drawing it through the opening in the splicer.

Power Rag Wrapping Machines

In large plants where a considerable amount of retreading is done, power wrapping machines are used in preparing retreaded casings for the kettle and horizontal vulcanizer. They wrap much more tightly, more quickly and at less expense than can be done by hand. Two minutes is about the time required.

One type is so constructed that the tire lies flat on a table and revolves on three rollers driven by two stationary upright feed rollers.

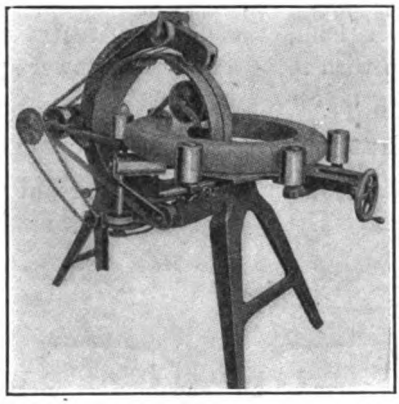

Miller Rag Wrapper

There are two other vertical rollers adjustable to the diameter of the casing. A rotary drum that carries the spool containing the tape, rolls on fiber wheels and is driven by two belts. One or two spools of tape are required to wrap a tire, and the spools can be instantly removed from the machine. In order to place a tire in the machine, the revolving drum which carries the spool is made with a gate in it. This gate is on hinges and can be rolled around to the opening in the frame and quickly opened to admit or remove the tire.

A machine of similar construction is intended to be fastened to a wall or post. It is quickly adjustable to casings of all sizes by a hand

wheel that separates or draws together the two feed rollers. The speed of these feed rollers regulates the amount of lap, which averages about one inch to each revolution of the spool. The tightness of the wrap-

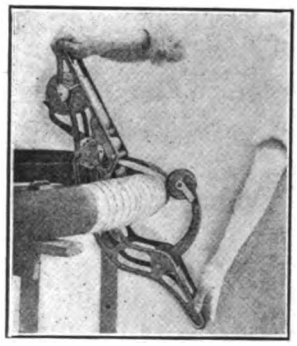

ROSSMAN HAND WRAPPER

ping is regulated by a hand wheel which creates friction against the spool. In connection with these machines a power spool winder is used to wind the wrapping tape ready for use.

HAND RAG WRAPPING MACHINES

There are also hand-operated tire wrappers, of which the Rossman is a notable example. The operation of this machine is as follows:

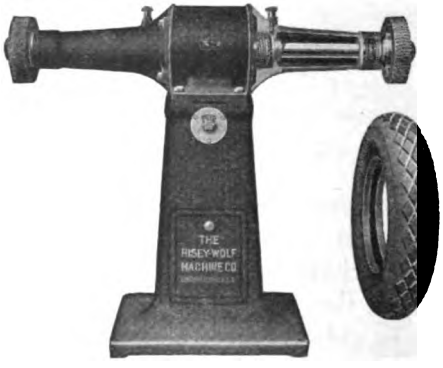

HISEY-WOLF TIRE BUFFER

The wet bandage is tightly wound on its spool and dropped into a recess slot in the frame and the pressure arm released against the bandage. A portion of the bandage is unwound and passed through the

guides and once around the tire, establishing an over-lap in the bandage and securing the end thereby. The yielding roller arm is clasped about the tire, which is placed on a pair of trestle bars or between two benches, and the machine is rotated around the tire, which causes the bandage to be resistingly drawn from the spool and forcibly applied to the tire. The average tire takes two twenty-five-yard bandages, depending upon the amount of overlap or feed, which is regulated at the option of the operator.

Buffing Stands

Buffing stands are made either with column base and counter-shaft and pulleys for the ceiling, or without counter-shaft and base for

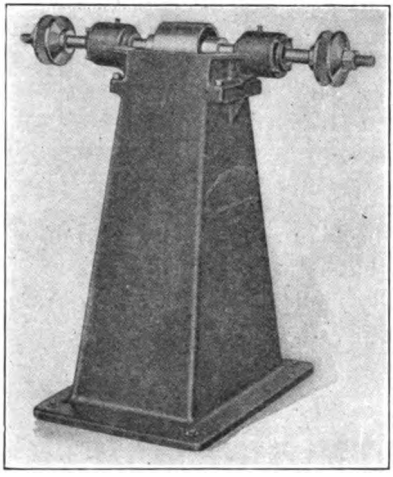

Buffing Stand

mounting on a bench. Several types have the spindle extended on one end so that a casing can be buffed with a wire brush without interference from the belt or column of the stand, while the other shorter end gives a rigid support for a rotary rasp. An emery wheel may be substituted when desired for grinding tools. A two horse-power motor is recommended, or a three horse-power motor to operate an air compressor in addition.

Tread Rollers

Tread rollers save much time and labor, rolling the rubber and fabric much more effectively than it is possible to do by hand. They mash down high places, fill in low places and drive the air from under

tread and fabric, ensuring a secure repair. The device consists of a frame designed to be mounted on a bench, a concave and a convex roller or ball, an operating crank and a hand wheel screw to adjust the space between the rollers.

The Western tread roller, peeler and applier is a machine that combines a tread roller that will not only apply and roll down the built-

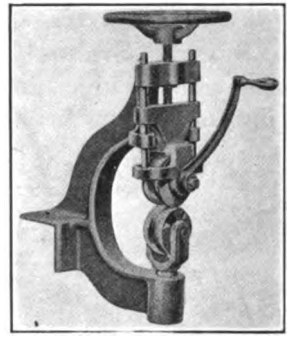

A.-W. TREAD ROLLER

up tread or "camel back" in one operation but will also peel the old tread from the tire that is to be rebuilt.

It is substantially made, having a heavy frame post on which the head of the machine pivots and swings to one side while applying the

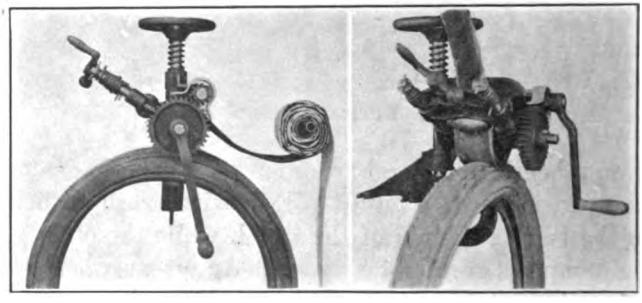

WESTERN TREAD ROLLER AND PEELER

tire. The head of the machine is then swung around in place, locked, and the pressure screws adjusted.

As a tread roller it will apply and roll down the raw stock at the same time, forcing all air away from in front and eliminating chances of trapping it, as the pressure is put on at the same time the tread

comes in contact with the tire. As a tread peeler it will remove the old or worn tread from a tire in a short time.

The driving power is back-geared "three to one" so that a sufficient pressure can be applied in rolling down the raw stock and power gained for peeling off the old tread. Both tread peeling and tread rolling attachments have regulating springs which automatically adjust the roller to the high and low places, keeping an even pressure on the tread regardless of how unevenly it may be worn or how rugged the non-skid design may be.

Boilers and Steam Generators

Vulcanizers of all types not equipped with self-contained steam boilers require a separate steam plant, one boiler usually furnishing all the steam required for the entire repair shop. In shops where a considerable amount of vulcanizing is done the well-known vertical tubular boiler using coal, coke or wood as fuel is the most practical. This type of boiler may be had in sizes from 1½ to 125 horse-power, the most used sizes being 4, 5, 6, 8 and 10 horse-power.

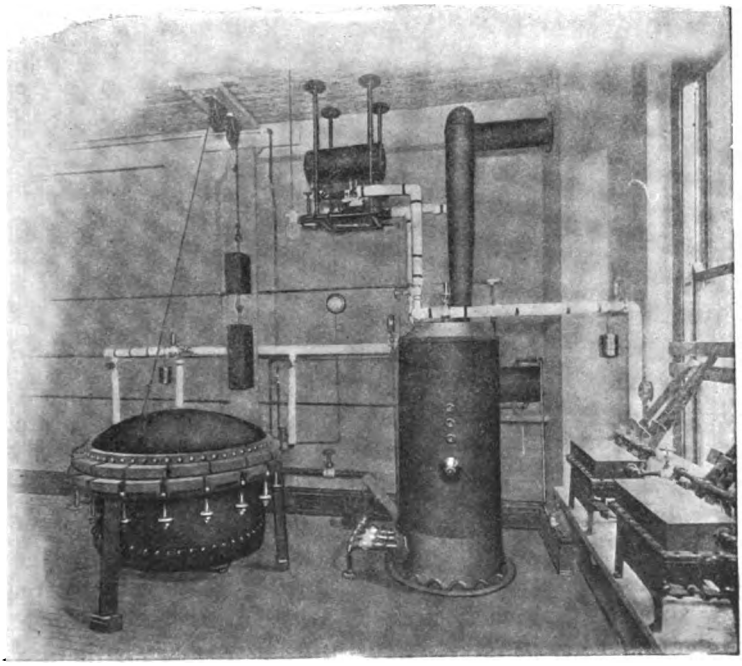

Fisk Pot Heater and Boiler

As such boilers involve an expenditure of $200 to $350, a great demand has sprung up for compact coil steam generators using gas, gasoline or kerosene as fuel and supplying sufficient steam for a repair plant of moderate size, consisting, for example, of a three to five-cavity sectional vulcanizer, inner tube vulcanizer of average size and two or three inside patch vulcanizers. One of these generators will also operate a retread mold or one of the "doughnut" type of kettle vulcanizers when its full steam capacity is available for that alone. They are quick steaming and economical, as spiral coils encircling the center reservoir

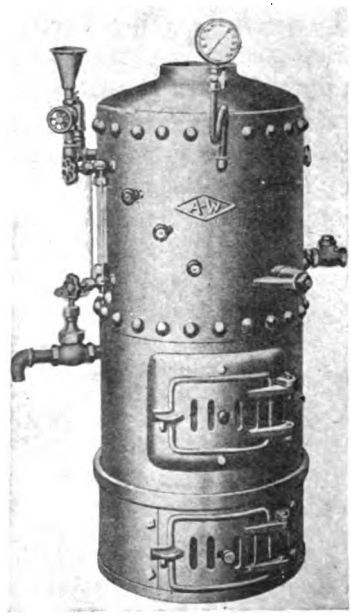

AKRON-WILLIAMS BOILER

are exposed to full heat. With gasoline, 60 pounds of steam can be generated in 12 minutes; with gas, the same pressure is attained in 15 minutes. Each generator is equipped with steam gage, water gage and safety valve.

The rapidity with which a great volume of steam can be generated in water coils exposed to heat has led to the production of large generators working on the same principle as those described, but having three times their capacity or more. They are constructed for the use of gas, gasoline, kerosene, coal, coke or wood as fuel and will furnish sufficient

steam to operate a large kettle vulcanizer or all of the other vulcanizers necessary in the largest repair shops.

In the illustration on the preceding page is shown a one and one-half horse power Akron-Williams universal boiler or generator of vertical tubular type and of steel construction throughout. It is readily convertible from gas or gasoline burning to coal or coke burning with the addition of a small section which fits to the bottom of the boiler unit. This boiler has a very low water line, permitting a gravity return from the vulcanizing units.

Sewing and Stapling Machines for Retreading

The Singer sewing machine for retreading tire casings is more or less characteristic of several machines by which, after two discarded

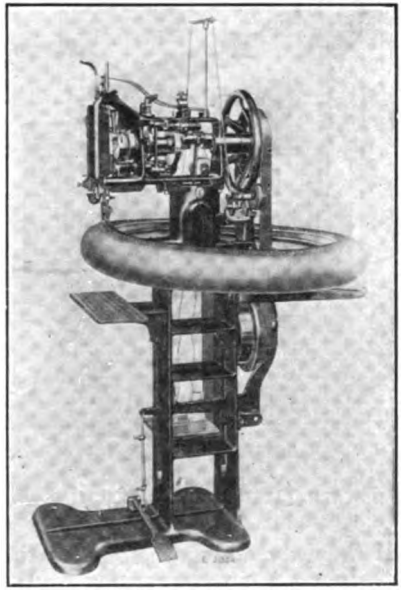

Singer Tire Sewing Machine

casings have been cemented and vulcanized, they are stitched together. The casings used are selected, one with a good foundation of fabric and bead and the other with a good rubber exterior to be utilized as the tread. After an inch has been trimmed from its clincher edges, the improvised tread is placed outside of the fabric foundation and the two are firmly stitched together by the machine. Being laid in a perfectly normal position and supported by the end of the machine and

two projecting rollers, the casing and tread cannot become distorted during the stitching operations.

As the casing and tread are moved forward at each stitch, the needle and bobbin threads are passed through a lubricating wax solution to insure a uniform and tight lock stitch.

When repair patches are being sewed on tires, a lever at the top of the machine can be depressed to cause a reversal of the feed.

With the Ewald tire retreader the tread cut from one old casing is stapled to another complete old tire. The operation is extremely simple. Having two worn tires of the same size, cut the treads from the best one and slip it over the other casing. Insert a staple in the

EWALD TIRE-STAPLING MACHINE

holder and push it all the way down, then place the tire over the machine table, setting the gage so that the staples will be three-eighths of an inch from the outer casing edge. A forward movement of the handlever forces the staple through the casings and clinches it. This operation is repeated around the tire on both sides, setting the staples about one inch apart. A three-quarter-inch reliner strip of gummed fabric is then placed over the staples and the tire is ready for the road.

MISCELLANEOUS SHOP EQUIPMENT

Of the many convenient devices to facilitate repair shop work, the following are of special interest.

The Williams tube deflator is used for removing the air from the tubes prior to the operation of making a repair. Its operation is quick and extremely simple, the tube to be deflated being slipped over one of the projections provided on the plate, when, by turning the handle, the

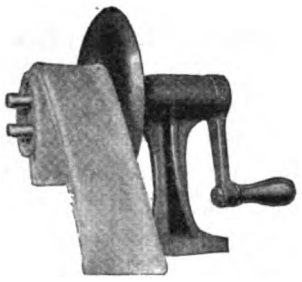

WILLIAMS TUBE DEFLATOR

tube is wound tightly around the two projections, thereby exhausting the air within. Any size of inner tube can be quickly deflated on this machine.

The Trenton tube testing tank is made of glazed porcelain, the white background reflecting the bubbles as they rise from the leak in the inflated tube, and the glazed surface facilitating the cleaning of the tank. It stands on a porcelain pedestal, which brings it about 30 inches from the floor, relieving the repair man from the necessity of stooping over while testing a tube. The tank is provided with an outlet and can be connected with sewer or drain.

A British tube testing tank is sold with a net in which the tube is enclosed, after which it may be inflated to running pressure without danger. When immersed in water any leakage is infallibly discovered, even after it has escaped detection by any other method.

CHAPTER XLVII

ROADS FOR TIRES

INTIMATELY associated with the subjects of the production of tires and the use of automobiles is that of the condition and construction of roads. With the manufacture and distribution of modern vehicles already far outstripping the making of roads, the problem of highway building and upkeep has assumed a serious aspect. In fact, sagacious observers fear that industrial development will be greatly restricted in the near future if a considerable effort be not made at once to construct more and better roads.

Importance of Roads Underestimated

It has been the fashion, in the United States at least, to underestimate the part that the country's public highways play in the national life, and to depend too much on and to ascribe too much importance to the service rendered by the steam railroads; yet the latter, great and indispensable as they are, constitute only 15 per cent of the national highways, leaving the ordinary roads to make up the remaining 85 per cent. No argument need be advanced to show the advantages of making traffic operations easier, quicker and cheaper; nor to demonstrate the need and wisdom of tire and automobile makers and users actively cooperating with public officials in order to get for the nation the best possible facilities for travel and the interchange of commodities. While it is true that during the past quarter of a century a vast improvement has taken place in road construction; that a great extension of mileage has followed the advent of the self-propelled vehicle; that huge sums are being expended and that extensive experiments are being made, still the goal of the perfect road for which the engineers are ceaselessly striving is not yet in sight, although it may be only around the corner.

Enormous American Highway Expansion Necessary

A comparison of American road building and motor vehicle production during the past ten years vividly shows the necessity of enormous highway expansion. In 1910 approximately 7 per cent of this country's highways were improved, and even today improved roads

are estimated at only 15 per cent of the total mileage. But while good roads were being doubled, the number of automobiles has been increased some seventeen times. Within five years the main traveled roads will be clogged with traffic, and in figuring highway capacities and building new roads the ratio of increasing traffic must be considered.

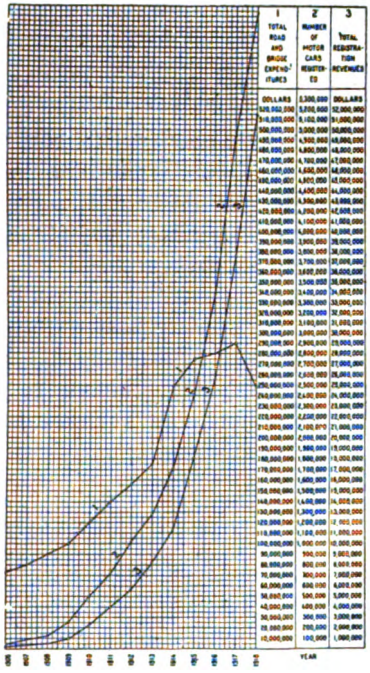

The total road mileage of the United States is nearly 2,500,000 miles. With a total registration of 9,211,295 motor vehicles there is an average of almost 3.75 motor cars for every mile of public road. There is an average of one motor car registration for every 11 persons in the United States. The Southern states show the biggest rate of car increase per capita; then follow the agricultural states, mining states and lastly the manufacturing states.

Highway building is making great progress to be sure, but it is only in its infancy, and when the expenditures now authorized by the several States and the Federal Government have been exhausted the work will be only fairly under way and tremendous further outlays will be required.

Greatest Progress in England and France

In proportion to populations, both England and France have made and are making more progress than America. Congress has appropriated $275,000,000 for expenditure up to and including 1921, for improvement of the 2,500,000 miles of roads in the United States. France plans to spend $152,000,000 on her national system of highways comprising 65,000 miles, while England has appropriated $50,000,000 for expenditure on her 150,908 miles.

England has 239 citizens to every mile of road; there are 108 Frenchmen to every mile, and in America there are only 42 persons to the mile. According to these figures the highway system of the United States will not equal the ratio of French mileage to area until we have 5,000,000 miles of highway, while 7,500,000 miles will be necessary to meet the English ratio.

Increased Use the Real Cause of Road Deterioration

While motor vehicles have been generally blamed because roads wear out faster than formerly, the evidence in the case rather leads to the conclusion that it is not such vehicles in themselves that are the real cause of road deterioration so much as the increased use to which roads are being put.

Laws to Safeguard Roads and Travel

Ill-formed public sentiment on this score early found reflection in numerous city and state measures designed, if not to repress, at least to penalize the automobile owner as a road destroyer; but, as the merits of the automobile for human and commercial transportation became more obvious, and the popularity of such vehicles grew literally by leaps and bounds, not only supplementing the service of the steam railroads but often wholly taking the place of the latter, the old antagonism gave way to a tolerant spirit and even to earnest inquiry as to how the community might best accommodate itself to the new factor in transportation. Road congresses began the systematic and engineers the more scientific study of the effects of the new mode of propulsion on highways, the result being that many excellent recommendations were made to law-makers to safeguard travel not only for the public generally but for motorists themselves, and particularly to preserve the roads from undue deterioration.

Weight and Speed Restrictions

The most familiar regulation sought to restrict the weight on the axles of motor trucks, to limit the weight per inch of width on the

tire tread, and to place bounds upon the speed of all such heavy vehicles. Motorists contended that their vehicles were much less ruinous to roads than ordinary horse-drawn wagons, and that the narrow steel bands on the latter did far more damage than the wide rubber tires of the motor trucks. Instances were cited of wagons carrying loads of 1,500 to 2,000 pounds per inch of tire, as compared with loads of 600 to 700 pounds per inch carried on the broad, resilient tires of motor trucks. Wide tires, they insisted, were not unlike steam road rollers that, weighty as they were, did the roads more good than harm. The disputants finally agreed that at low rates of speed the motor vehicle could do no unreasonable injury to a road, but that at high speeds it could and does damage the usual types of interurban roads. The regulation of the speed of automobiles has hence come to be a matter of no small moment, and has introduced a problem that concerns not only highway construction and upkeep, but the very safety of the road itself for motor vehicles and for those who operate them.

The safety of the road for rubber tires, or indeed for all vehicles, is a function of several variables, without a knowledge of which no one can form any just estimate. In the final wind-up the speed and weight of the vehicle, the elasticity of the springs, shock-breaking fitments, the length of the wheel base, the question of front or rear drive or horse propulsion, the efficiency of the brakes, the length of the axle, the size of the wheels, the hardness and shape of the tires, and the skill of the driver has as much effect as the character of the road surface and the general layout of the road, judged by its hills and bends. This does not complete the list of influences which bear upon the general result of road safety, but it gives a fair idea of the complex conditions.

Rights and Duties of the Builders and Users of Roads

Road law must decide, in cases of dispute or accident, upon whom the responsibility and the burden of proof lie. The makers and the users of the road have mutual rights and duties to and from each other, and the users also must respect each others' rights. The makers must furnish a survey and a surface which make the road reasonably straight, level, and smooth, regard being given to the character of the traffic which it will probably bear. Whether the road makers be a private corporation or the state itself, the private owners or the public officers are responsible for the fulfillment of these conditions. On the other hand, the wayfarers undoubtedly rest under certain obligations toward the road builders. Unforseen classes of traffic, such as traction, en-

gines, and unreasonably heavy or very narrow-tired vehicles, may be excluded from the road, or their use of it restricted to certain weather conditions or to the night time. Vehicles traveling at unreasonable velocities, which are not easily controlled, or vehicles using spiked tires, sled runners or other means of road contact, unusual or unknown to the makers of the road at the time of its construction—these as well as other possible and unforeseen types may be excluded or their use restricted, either on account of undue damage resulting to the road or of undue inconvenience to the other wayfarers.

The law cannot justly fix limits of speed in either direction, beyond requiring that these be reasonable. The principle of the king's highway has been applied to all roads, and nobody can be restricted in or excluded from their use without due cause. On the other hand, no man or vehicle can stop on the road, since this would be an obstruction, depriving others of equal rights to its use. Vehicles going unusually fast or slow must have unusual regard for the rights of the customary traffic. Such vehicles are virtually an obstruction of the highway, and may be punished as such. Under the common law this is a serious offence, having been formerly punished with death. Deliberate obstruction of the roadway is nowhere tolerated; and furious or uncontrolled driving of any vehicle constitutes a virtual monopoly of the road to that vehicle, and monopoly is equivalent to obstruction. The common law offers full remedy for overspeeding.

Between users of the road, in case of vehicles meeting, the law is generally explicit, since such cases must of necessity be of constant occurrence. Throughout the British empire, meeting vehicles turn to the left; elsewhere, they usually turn to the right. In passing, the foremost vehicle must turn not only if it be going unusually or unreasonably slow. If the passing vehicle be going unusually fast, it must pass the other as best it can and without disturbance.

It is apparent to any one that there is a great difference in the size and strength of vehicles or other users of the road. This disparity would lead to inequalities repugnant to the common law, were there no restraining tendencies. In the United States, the restraining tendency is supposed to reside in the instinct of the people for fair play and equality. Wherever this ideal is still strong, the users of the road have been able to get along peaceably, without interference from the government, so that the written law is generally silent on this point. In certain communities there is shown a decided inclination for the heavy traffic to ignore the rights of others, but this is unusual, and does not represent the American spirit or laws. There is also a tacit

understanding in American law that the individual is generally able to care for himself, both the interpretation and defence of their rights being left with the citizens themselves. This is a greater trust than is allowed to British subjects, so the common law, which is ever favorable to the weak, lays the responsibility upon the heavier and faster vehicle. The reason is that the common law antedates the use of vehicles of any kind on the road, when the great majority of persons walked. In America the roads were built primarily for horse-drawn vehicles, sidewalks being provided for pedestrians, where necessary. Vehicles or pedestrians who invaded each others' exclusive domain, did so at their peril. The only clash comes at street crossings, where road and sidewalk coincide. This has been a constant source of uneasiness, accidents, and litigation, and will continue to be until the general principle has been settled at law in favor of the pedestrian. In Europe it has long been settled in favor of the vehicle against the pedestrian.

Improved Roads

As has been said, the safety of the road depends upon many things, speed being among the most important; a road which is good for vehicles running at a moderate speed may well be unfit for these going at a much higher speed. Everybody wants good roads, and all generally agree on what is meant by that term. It is indisputable, however, that the standard of goodness in road making rises faster than the means of accomplishment. A road which is good enough for the majority of its users may be fairly accounted good in law. Consequently, the contention of a comparatively few drivers of high-speed motor vehicles that all roads should be made suitable for their particular uses, will not hold good and justifiable in law. All of us want roads that are broad, straight, long, level, hard, and smooth; and though experience has shown that road making is the best-paying of all public investments, and that the state might even afford to run ahead of present demands, there are limits to this, both in theory and practice. Easy communication is the hope of the world and the invariable beginning of better things; but better than improving already good roads is the bringing of others up to their standard. If the excessive improvement on a particular road comes from private enterprise, well and good; but the state must have regard rather to extensive than to intensive improving. For automobilists to demand that the public roads, which are good enough for the public purposes should be immediately made fit for their purposes at great public expense is unreasonable, however good the end itself may be. Even with the auto-

mobilists in the majority, their ambitions might still be uneconomical, and thus oppressive to the minority, and even to themselves. To be sure, the best roads of the world have been uneconomical, being made for military purposes. This is true of the French and Swiss roads, the greatest of these having been built during the darkest days of their political life.

The Maysville Road

The Maysville road, the bill for whose nationalization was vetoed by President Jackson in 1829, long marked the highwater mark in American road building. The road was really uneconomical, for its builders were driven by passion. It is 70 miles long, 50 feet wide, graded like a railroad, and sometimes without a bend for distances of 10 or 15 miles. Unlike the ordinary macadam, the road was made by the simple but expensive process of laying down 18 inches of crushed limestone. As a result, the cost of upkeep was low, and the project may have been justifiable before the era of railroads, when roads were a public necessity, instead of expensive toys, as they seem to be nowadays. High-sped motors are regarded by most men as dangerous toys, which it is probably unwise to encourage. Accordingly, when the motorists raised the cry for better roads, the authorities retorted that motor cars tore the face off of the roads quicker than any other type of vehicle. This was a great surprise and many refused to believe it; but the statement is well founded. During road races the roads, especially on curves, are torn up by the flying cars. Showers of small stones are dislodged by every car rounding these curves, so that the chippings and binding material, so necessary in surfacing, are often completely stripped from the road at the sharper bends. It is this valuable top dressing that suffers so much from non-skid tires. The clouds of dust raised by low-hung cars at high speeds bear out this contention; and the rapid wear upon the tires bears witness to the considerable grinding or chafing action, due to rubber compression and expansion rather than "suction," exercised upon the road by the driving wheels and by skidding. Farm wagons certainly cut into roads that are not well drained, but they do not remove the road material bodily.

Crowned, Guttered and Oiled Roads

Up to the coming of high-powered motor cars, the key to successful road building was secured by arching the crown of the road and guttering the sides, so that rain would run off to the side without gathering strength to scour it, as it will do when it is allowed to run

down the middle of a hilly road. Properly crowned, it was found that roads suffered less on the hillsides than in the bottoms, which is not true of flat roads. Roads so crowned seemed actually to improve with use, and when treated with petroleum having asphalt as its base, to keep down the dust and to shed the rain more easily, these roads were perfect, as regards the customary traffic. Heavy mineral oils did not seem to hurt rubber tires, either, though it was expected that they would. Being so well drained, the heaviest wagon traffic does not cut into them appreciably. Motor cars, though comparable in weight to a loaded farm wagon, could run on such a road indefinitely and without injury.

Separate Roads for Automobiles

The rapid grinding off of dearly bought road surfaces by motor cars has, as has been said, introduced a new problem in road making. To meet these new conditions, two widely different schemes have been proposed. One of these has to do with building separate roads by and for the automobilists alone. This, as everybody knows, was the solution of the locomotive problem, when it first appeared in England, and the locomotive problem of 70 years ago was almost identical with the present automobile problem. In each case, the power vehicle made demands upon the road that were and are considered incompatible with the rights of road users and road makers as well. Persons who view the matter in this light say that if motor cars require a special kind of road, then let them build their own roads for their own use. To be sure it is good economic doctrine, that when two uses of an instrument are in conflict or even widely different, it is better to have two instruments for the two purposes. A road which seems straight and level for a horse and buggy or a wagon, will seem both rough and crooked to a motor car running at top speed. With rigid wheels and tires, a motor car will be racked to pieces at a speed which would be only pleasant in the same car shod with good pneumatics. It is astonishing how a high-speed car will bring out roughness and bends hitherto unperceived in a road that was thought to be perfect. This means that the adaptation of ordinary roads to such vehicles is practically impossible, and that it would not be economical to the commonwealth, even if it were possible.

Lateral Action of Automobile Wheels on Road Surfaces

There are those who would let the motorists build their own roads and use them as they see fit; but they insist that if motors are to

run on the public roads, they must conform to the requirements of the customary traffic. The opposite idea, proposed by road experts, is based upon a study of road surfaces acted upon by high-speed motor cars. The smooth surface, so hard to get on turnpikes, may be firmly supported from beneath, but it has no lateral cohesion. The wheels of horse-drawn vehicles, which merely bear weight, act only vertically upon the surface, which is the direction in which it is most firmly supported; so that injury can come only from excessive and unforseen weight, or from unreasonably narrow tires. The iron-shod horse does some damage, probably; but his weight is not considerable, and the smoother the road, the less will be his tractive effort. The wheels of the motor car, in securing traction and in skidding, exert their action laterally upon the road surface, the direction in which it has practically no cohesion. Consequently, self-propeled traffic would tend to destroy this surface rapidly.

Asphalt, Tar and Oil Binders

The remedy proposed for this tendency is to furnish the necessary lateral coherence to the road surface through blending with it some tough substance, like asphalt or tar. One is to dip the rock chips, customarily used for the top dressing, in hot tar and then roll them as usual. This is called tarmac; slag or even cinders are sometimes used instead of rock chips. The other and more popular method is simply to spread hot tar or tarvia upon the top of a well-made turnpike while it is dry and free of dust. In this way the liquid tar soaks into the roadbed to a certain extent when it hardens, and forms a kind of matrix or tough bond between the fine fragments composing the road surface. This makes of the surface a tough conglomerate, which acts as a unit in resisting the driving strains and side thrust from the wheels of the motor. It also smooths and "quietens" the road to some extent, and prevents much of the customary dust.

Another inexpensive binder recommended for sparsely-settled communities that cannot afford roads with a better surface than cinders or gravel is asphaltic road oil (a petroleum product). If applied after the road has been dragged, holes filled, soft spots repaired, and loose dirt brushed off, and finally given a thin layer of sand the result is usually excellent. Prejudice against the oil treatment of roads may generally be traced to a previous failure resulting from the use of a cheap oil having mainly a paraffin base. The penny-wise rural administrators bought the temporary dust layer because it was cheaper than oil with a high asphalt content, and the result was that, as the

poorer oil had no binding power, the road surface soon presented a coat of greasy dust, easily carried off by the wind, and harmful to clothing and vehicles.

Sheet Asphalt Pavement

Sheet asphalt pavement early won favor with motorists, and that it holds its popularity is amply attested by the reports from fifty-one large American cities, which show that 60.7 per cent of their paving is of this material, while 13.9 is of stone-brick, 4.1 of concrete, 4 of wood block, leaving all other types to make up the remaining 3.6 per cent.

Nine-tenths of the asphalt used is a base product of American and Mexican petroleum, which has largely supplanted the native or lake asphalt from the islands and mainland of the Caribbean Sea. Not only has asphalt proved very efficient in urban sections, but it has also given much satisfaction, when well laid, in rural communities as well. An instance is cited of a good macadam road in a farming district in New Jersey being given a sheet asphalt coating that showed practically no wear and needed no repairs after three years' use, although it had carried an exceptionally heavy traffic and had been subjected to extremes of temperature ranging from 10 degrees below to 106 above zero, F.

An objection is made to asphalt because its surface sometimes becomes "wavy," the rolling up or wrinkling extending from side to side. The primary cause of such a condition is, of course, the forward pressure of vehicle wheels, warm weather also aiding and beating the vehicles in undulating the top of the pavement. Engineers, however, trace the trouble further. They declare that "waviness" will give practically no trouble if the bituminous mixture be not made too rich for heavy traffic, if it be not laid on too thick, if proper cohesion is secured between base and binder, and if the stone in the foundation has been well keyed together to make base yielding impossible. They are generally agreed that the asphalt road, if constructed according to the best formulae and specifications, comes nearer than any other to being the highway best adapted to all the exigencies of modern traffic.

Rubber Pavements

Idealists have long cherished the hope that in rubber would be found the real solution of the world's paving problem; but the fact remains that unless the world's supply of crude rubber is immensely increased and the price of this much-sought commodity is largely de-

creased there is but very little prospect of this material ever being generally used on highways except in the familiar form of pneumatic and solid motor car tires. Some estimates of cost put the price of rubber at even ten times that of asphalt for paving.

That rubber makes a very durable paving material, even apart from its other qualities, has been amply demonstrated. For instance the approaches to the Euston railway station in London were paved in 1881 with slabs of rubber 2½ inches thick and, although subjected to the tread of millions of feet, it was not until twenty-two years afterward that it was found necessary to replace the slabs, and then only on one side of the station. To deaden noise, the courtyards of two of London's leading hotels were also paved with similar rubber slabs many years ago. It was noted after twenty years that the slabs had not worn quite an inch. Paris, Lyons, Marseilles, and some other French cities have been experimenting in recent years with an asphalt-rubber pavement on a heavy concrete foundation, and, while good reports are made as to the wearing quality of that compound, engineers do not regard the tests thus far given as being sufficient to warrant them in commending the new pavement for general use. Many kinds of solid rubber cubes and rubber-topped wood blocks have also been tried, but their cost has militated against their adoption, except in a few isolated instances. The most common trouble that inventors have had to cope with was the slippery surface experienced in rainy weather, though they do not despair of finding some compound that will overcome even that difficulty.

The Huge American Road Building Program

In the meantime, while rubber tire manufacturers are ceaselessly experimenting, hoping to produce solid treads and pneumatic casings that will not only be more efficient but will do even less damage than ever to roads, many powerful agencies are at work promoting the scientific building of roads, and progress in that direction is very much greater than most people realize. Guided by engineers who have made exhaustive study of the adaptation of highways to multiform modern needs, to climatic changes, and to varying topographical conditions, a huge program of road-building is being carried out in the United States, the total expenditures for 1920 alone being estimated at over $625,000,000.

Lincoln Highway the Model

A project absorbing a considerable part of this huge sum is the national Lincoln Highway, a picturesque and possibly strategic artery

of travel forming a link between the Atlantic and Pacific coasts, over 3,000 miles long, and which is well under way. It is expected that this model road, in which many specimens of high grade paving materials will be utilized, will afford tire makers and tire users a remarkable opportunity to study under peculiarly suitable test conditions the reciprocal effect of tires on roads and roads on tires.

Studies and Books on Road Building

To the study of scientific road-building valuable contributions are being made and experiments conducted by the Public Roads Department of the United States Department of Agriculture. Of much practical aid, too, have been the deliberations of the American Congress of Road Builders, while conferences of many other American and European civic bodies have also done much toward spreading the gospel of good roads. Such works as Atherton S. Cushman's "Chemistry of Road Building," E. C. E. Lord's "Slag in Road Building," and Prevost Hubbard's "Examination of Bituminous Road Binders" also attest the earnestness of the endeavor being made to bring about better roads and to standardize the construction of our highways.

Impact Tests of Trucks on Roads

The destructive effect upon highways of the various types of heavily loaded, solid and pneumatic-tired trucks is a serious one to highway engineers. The question of wear and tear on the truck is really one that chiefly concerns the owner, but the disintegrating impact on the public highway is a matter of interest to every taxpayer and it behooves the highway engineer to serve the public in road building to the best of his ability and the benefit of the public purse.

Some instructive information is being obtained by the Bureau of Public Roads of the United States Department of Agriculture in a series of scientific experiments, which, when completed promise well for the future of road building. It is probable that the results of these experiments may lead to a national basis for choosing road design and materials, and for determining license fees for motor vehicles.

The experiments show that the magnitude of the impact of truck wheels upon a road of uneven surface is dependent upon: (1) height of drop, (2) weight of truck and load, (3) kind and condition of tires, (4) characteristics of springs, (5) speed of truck, and (6) power on or off.

The type and condition of the tires is an especially important factor. Sufficient tests have been made to show that increased speed

of a vehicle equipped with hard rubber tires tremendously increases the impact which its wheels make on the roadway where there is any unevenness. On the other hand, where pneumatic tires are used, increased speed adds comparatively little to the impact.

Trucks have been used in these tests varying in size from a 1-ton truck up to 7½-ton truck carrying an excess load. Each truck was run over a special recording device embedded in a roadway, and the impact pressure which resulted when one of the wheels made a 2-inch drop from a ledge built on the road surface caused the deformation of specially prepared copper cylinders forming part of the apparatus. The magnitude of the blow was accurately ascertained in pounds by measuring the extent to which the cylinder had been forced out of shape.

Tests were made with a 3-ton truck loaded with a 4½-ton load so that the total weight on each rear wheel was 7,000 pounds, the unsprung portion (that not supported by the springs) being 1,700 pounds and the sprung portion (that portion supported by the springs) 5,300 pounds. The truck was equipped, first with an old solid tire that had been worn down to a thickness of 1-inch. Then, with exactly the same load on the truck, a wheel was used fitted with a new solid tire 2½-inches in thickness. And finally, the truck was equipped with pneumatic tires 42 by 9 inches and inflated to a pressure of 142 pounds per square inch.

The following table shows very clearly the bad effect an old tire is likely to have on a road surface and the greatly lessened impact produced by trucks when they are equipped with pneumatic tires. The tests show that as the vehicle's sped increased, the impact from the old solid rubber tire increased greatly.

Approx. Speed	Height Inches	Old Tire	New Tire	Pneumatic Tire
5.7	2	11,600	9,400	7,100
10.2	2	18,500	14,100	7,800
14.6	2	26,500	18,700	8,300

Related to these tests is another series which utilizes the figures obtained in the first experiments. A number of paving slabs were tested by means of a machine designed to give impacts equivalent to those produced by the rear wheel of the truck already referred to. The unsprung portion of the weight of this machine is 1,500 pounds and the sprung portion weighs 6,000 pounds. The tests were made by raising the entire weight through a height of ⅛-inch, allowing it to

fall 500 times, then to a height of ½-inch with 500 repetitions, then ⅜-inch more in height, and so on until the slab failed. To date about 12 slabs have been tested, laid on a rather wet subgrade.

A surprising difference has been found in the strength of the different types of pavements tested. The total number of blows required to cause failure have varied with the different slabs from 67 up to almost 2,000. All these data promise to be of the greatest value to engineers in selecting material for roads of various types.

CHAPTER XLVIII

WHAT BECOMES OF WORN-OUT TIRES

WHAT becomes of all the automobile tires, when once they are worn out? The best of them cannot last as long as a well made and well cared for automobile, and millions of these heavy rubber bands have been discarded since motoring first began. What becomes of them? Worn out tires are not thrown away, for so long as any rubber remains it continues to find new uses.

Junk Men and Scrap Rubber Dealers

It should be understood that high-grade rubber is used in the manufacture of automobile tires. That being the case, it is natural that when tires are discarded they should be in demand by those who "reclaim" rubber. Hence a systematic trade of large proportions has grown up in these articles. The junk dealers, small and large, are constantly on the lookout for old tires, and now and then one of them gets into trouble on account of acquiring a tire that has not become worn out. The junkman pays as small a price as possible, loads the tire on his pushcart, or if he is in trade in a large way, on his wagon, and carts it off to the cellar which he uses as a sorting room and warehouse. There it lies until he has accumulated enough others to make up a lot worth while, when he sends it to a dealer in "scrap rubber." He, in turn, ships his collection in carload lots to the mills where the rubber is reclaimed.

So it is seen that while a tire may be cast aside as worthless by the tire dealer or repairer, it still has an intrinsic value. The price of such material, however, varies with circumstances. The market for old rubber, as in the case of all other commodities, fluctuates, prices being governed by the law of supply and demand. Sometimes the reclaimers want pneumatics, and sometimes they are more in need of solid tires, because different stock is required for producing different grades.

Some of the New York houses where old tires accumulate, when the motorist has been supplied with new ones, dispose of the waste material under contract. But if there is no such contract, the tire people do not have to worry about disposing of their old stock, as there are junkmen waiting all the time to carry it away and pay the prevailing market price. Dealers do not always make a profit on the stuff, but

they have to handle it, because if they do not take the old tires off they cannot put new ones on.

At a warehouse devoted to the reception, storage, and shipping of rubber scrap, the manager said:

"We don't let this stock accumulate; in fact, we don't have a chance to. As fast as we get enough to make it worth while we ship it to some reclaiming works. Reclaimers distinguish between solid and pneumatic tires, paying more for one than for the other. We have nothing to do with the gathering up of the old tires. They come to us in the regular way, with all sorts of rubber that is brought in by junkmen. The junkmen bring the stuff to our door and we pay them the market price for it. Some reclaimers don't use old tires, however, but we have no trouble in disposing of all we can get at good prices, and the demand is increasing."

In England, where many rubber manufacturers make their own reclaimed rubber, considerable tire stock is used for this purpose. Hence some of the large tire makers have entered into arrangements whereby all the cast-off tires accumulating in the hands of their customers are taken at the market price, the proceeds being credited against the customer's account. So important a consideration is this that sometimes a year's contract for new tires is determined by the liberality of the manufacturer in accepting cast-offs for his reclaiming requirements.

Reclaiming the Rubber and Fabric

The high price of new rubber a few years ago created a great demand for everything containing rubber. Hence science was led to evolve processes whereby the rubber in worn-out goods can be separated from the fabric combined with it in tires, overshoes, and the like, and turned to use as "reclaimed" stock. The use of reclaimed rubber in the manufacture of rubber goods has since become one of the most important items of technique in the industry, economy and competition having been sufficient incentives for its continued use. Insignificant as discarded rubber shoes may seem, such is the demand for rubber that very few of them are overlooked by the junkmen throughout the United States; even the cast-away rubbers of Russia and the rest of Europe find their way finally to the rubber reclaimers. There is no probability, therefore, that old tires will ever become a drug on the market. It may be added that reclaimed rubber is valuable as a filler for use in compounds for many kinds of rubber goods—being superior, in fact, to some of the materials employed before its discovery. It is not used in place of new rubber, but only in conjunction with it.

Uses and Consumption of Reclaimed Rubber

The amount of reclaimed rubber now consumed annually is very great, requiring the constant operation of many reclaiming works. In 1917, 195,968,188 pounds of reclaimed rubber were used in the United States as against 330,653,644 pounds of crude rubber of all sorts. It was employed chiefly in the manufacture of mechanical rubber goods, tires and tubes, boots and shoes, insulated wire and insulating compounds, waterproof clothing, cloth and sheeting and hard rubber goods, named in the order of quantity used. About 36 per cent. of the total went into mechanical rubber goods and some 24 per cent. into tires and tubes.

Reclaiming Processes

The process of reclaiming rubber was first developed in the United States, where it is still more largely practised than in any other country, though the industry is growing in Europe. The American industry is composed of numerous independent units and the reclaiming departments of several rubber manufacturers.

Many patents have been issued for rubber reclaiming methods. There is a mechanical process, which involves grinding the waste, blow-

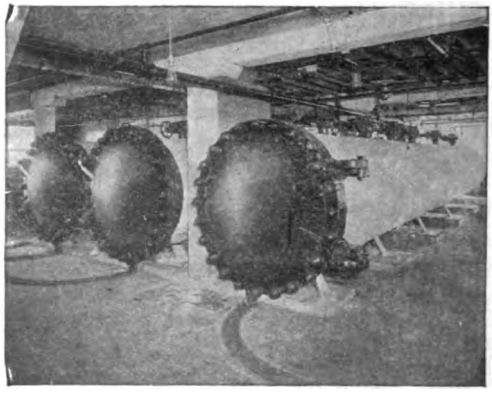

Devulcanizers
Showing three of these great retorts, each with a capacity of 40,000 pounds

ing out the fiber, and steaming the rubber which remains in order to overcome the effect upon it of the sulphur used in vulcanization. But the most important processes at present are the so-called alkali process and the solution process. The larger output of reclaimed rubber, and that which covers the consumption of most of the tire stock used, consists in treating the ground scrap with a solution of alkali, preferably

caustic soda, at a comparatively high temperature, then washing, drying and sheeting. The cotton fiber contents of the rubber waste are thus destroyed and removed by conversion through the action

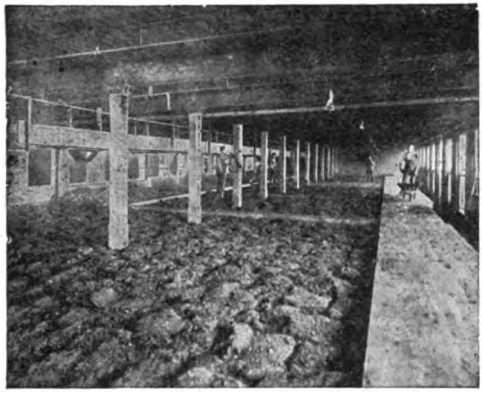

DRYING ROOM FOR TIRE STOCK
Showing the material practically finished, except that it must be refined and sheeted

of the alkali into a substance that is soluble in water, while the mass of rubber itself remains undissolved and not affected injuriously. A further effect of the treatment is upon the sulphur in the goods, whereby

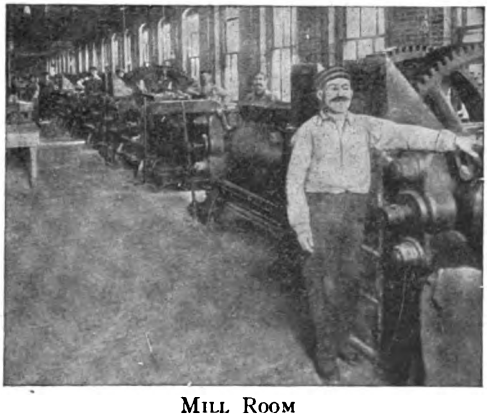

MILL ROOM
Where the material is run through rollers and sheeted for shipment

the rubber is rendered capable of combining more readily with new rubber in subsequent compounding.

In the solution process, on the contrary, the fibrous contents remain undissolved, while the mass of rubber is dissolved by the solvent

employed, leaving a rubber solution from which, after extracting the solvent, the mass of rubber is separated. In recent years the decreasing prices of rubber, crude, scrap and reclaim, the increasing demand for tire fabrics, and the development of numerous uses for pulled fabric from old tires has given great impetus to the development of several variations of the solution process which reclaim both the rubber and the fabric.

New Uses for Solution Reclaim

This so-called solution process, the Runge-Werke Aktiengesellschaft (Runge Works Corporation) in Spandau was the first to bring into use, not merely in Germany, but in the world. This firm has the largest reclaiming factory in Germany, which until the World War went under the name of Max Fränkel and Runge.

The Runge solution process of rubber reclaiming yields certain by-products which in turn make it possible to employ new methods of working in the manufacture of rubber products. The Runge firm had, even before the World War broke out, obtained the patent rights for a series of processes which offer not merely the possibility but the probability of introducing revolutionary inovations in branches of industry which are remote from the rubber industry, and which before the war were not taken into consideration at all as users of rubber.

The prospects for the solution reclaimed rubbers making good are now much more favorable than they were before the war. The matter is one which affects especially the processes for the production of proofed fabrics, also linoleum-like flooring and other necessaries for the building trade.

Solution Reclaiming Processes

There are many solution reclaiming processes, several being of other than German origin.

Heyl-Dia Process (British). By this process ground rubber is heated under moderate pressure in naphtha at a temperature of not more than 120 degrees F. The naphtha is drawn off and with it most of the sulphur. The rubber is then heated to over 350 degrees F. with a fresh solvent, when it dissolves. The solvent is then removed and the sulphur washed and dried.

The Basle Process (Swiss). This covers the use of various ethers boiling at a temperature of about 100 degrees C.

Zühl Process (German). Vulcanized waste is dissolved in five times its weight of naphthalene at a low temperature. The naphthalene is then distilled from the mixture with steam.

Koener's Process (German). Waste rubber is heated with solvents such as benzene for a time, after which the solution is further heated with water and the solvent subsequently distilled off.

Debauge Process (French). Tires are soaked for two or three days in xylol or other solvent, when the fabric can easily be separated from the rubber. The rubber is ground while in the brittle, swollen condition produced by the solvent, and the latter recovered from the rubber and fabric by steam or dry distillation, in the latter case under reduced pressure. The solvent may also be removed by washing with acetone or alcohol.

When the rubber has been swollen and loosened from the fabric by the solvent there are several ways to separate the rubber and fabric. The fabric may be stripped from the rubber, or the rubber may be removed

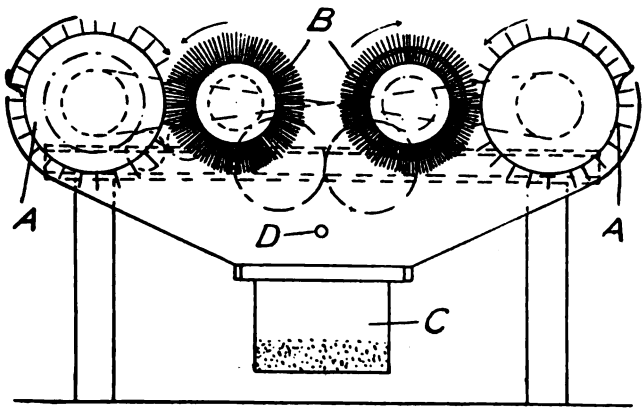

DEVICE USED IN DEBAUGE RECLAIMING PROCESS

from the fabric by digestion in vacuum with boiling xylol. If there is considerable rubber it may be broken from the fabric. There still remains the rubber on the surface or which has been frictioned into the fabric itself. To free the fabric it is brushed preferably with metallic brushes, and for this purpose the machine shown in the accompanying illustration is used.

The fabric is fed into the machine from either end, between a spiked holding roller *A* and a metallic brush *B*. The brushes revolve at a higher speed than the spiked rollers and loosen the rubber from the fabric. The finely divided rubber falls into a receptacle *C*, while the solvent vapors are drawn off by an exhaust fan through a pipe *D*, and subsequently recovered by condensation.

It is said that by the application of a water soluble solvent for the xylol, such as acetone, that the rubber will be reduced to powder and the xylol thus recovered. It is evident that if the acetone were in turn removed with water it would tend to further disintegrate the rubber, or if steam were introduced to distill off the acetone, the same result could be accomplished.

Considerable stress is laid on the value of the recovered rubber powder, though experience convinces that this would not amount to much, but the profits of the operation would be from the recovery of the fabric.

O'Neill Process (American). The caoutchouc is dissolved out from vulcanized waste rubber by treating the waste in a closed receptacle under about 60 pounds' pressure at a temperature below that determined to the rubber product (266 degrees F.) in the presence of boiling resin spirit.

The solvent is removed from the dissolved and devulcanized rubber by vaporation. The product is said to have all the characteristics of the original rubber compound before vulcanization.

De Villers Process (French). Rubber-coated waste fabric is treated with boiling hot tetrachloride of ethane in two stages. The free sulphur is removed by a brief treatment and the solution of the rubber is accomplished by a second extraction with fresh solvent. After removing the fabric, the rubber is recovered from the solution by adding water and distilling off the solvent with water; or the solvent may be distilled dry, provided care to be taken not to overheat the rubber. The fabric is practically free from rubber and is used in the manufacture of various small articles for which cotton duck is used.

Compagnie Générale Caoutchoucs de Terebenthine Process (French, Canadian and Swiss Patents). Rubber is recovered from rubbered fabrics by treatment with ethane tetrachloride, heating the fabrics during this treatment, filtering the resulting mass to remove the fabric, adding water to the filtrate and heating it to drive off the water and solvent.

Goldman Process (American). Rubber stock is recovered from vulcanized rubber by bringing the latter in contact with a solution comprising resin and a material obtained by the action of dissolved resin on vulcanized rubber, and incorporating this solution with the comminuted vulcanized rubber and removing the solvent therefrom.

Cox Process (American). Rubber stock is removed from vulcanized rubber by treatment in a resin solution together with a solution of vulcanized gum in a resin solution.

Porzel Process (American). Rubber waste is finely ground and mixed with a rubber solution in the proportion of 2½ to 3 pounds of new rubber to each hundred of old, the solvent being gasoline or carbon tetrachloride. The mass is reground, after which the solvent and any contained moisture are removed as far as possible, the temperature being kept below the vulcanizing point, employing a partial vacuum if necessary. Molding and vulcanization are effected with or without the addition of sulphur, which, when employed, is preferably dissolved in the rubber solvent.

Harris Process (German). Ground rubber scrap is heated with a solvent such as chloroform, carbon tetrachloride, benzol, etc., the inorganic matter is separated and the solution is treated with hydrochloric acid, rubber hydrochloride is formed and is either filtered off directly or is precipitated with alcohol or chloroform in a vacuum. After washing with alcohol, ether, or chloroform the rubber hydrohalogenide is heated with pyridin under a reflux condenser for 12 to 50 hours and the dark solution is poured into water and the regenerated rubber separates. German Patents No. 267,277, November 28, 1912; No. 267,-993, December 29, 1912, and No. 267,994, January 21, 1914.

Hutz Process (German). This consists in reclaiming vulcanized rubber scrap by treating it with hydrochlorines or the intermediate products obtained by the action of muriatic acid on glycerine. (German patent No. 268,843, December 24, 1912.)

Reclaiming Rubber From Leather Treads

There are also processes by which the rubber that serves to attach leather non-skid tire treads to the casing is recovered. By the Becker process, under a French patent, the metal studded leather bands are removed from the casing and a certain number of these are suspended in a steam jacketed digester, into which a mixture of 3 parts tetrachloruret of ethane and 1 part of benzine is poured. The digester is closed and heated by introducing steam into the jacket for some minutes. Tetrachloruret of ethane has the property of dissolving a considerable quantity of sulphur when warm. The liquid containing the dissolved sulphur is drawn off into a suitable apparatus, where it is recovered for further use.

The same quantity of solvent is poured into the digester and heated for half an hour at a temperature not exceeding 120 degrees C. By the action of the solvent the rubber is separated from the leather and sinks into the bottom of the digester in the form of a pasty mass on which a jet of steam is directed, causing evaporation of the solvent.

This evaporated liquid is condensed and collected to serve anew. The mass of rubber is removed through the manhole in the lower part of the digester, washed and rolled into sheets.

Salvaging Road-Worn Tires

The vast number of automobile tires discarded by the motoring public includes a notable percentage capable of yielding considerable additional mileage at low cost when rebuilt. In fact, the business of tire rebuilding is becoming nation-wide in extent and increasing.

The great unrepairable mass of old tires contains also a large tonnage of salable fabric of great value, useful for many manufacturing purposes. A discarded road-worn automobile tire carcass averages half rubber composition and half cotton fabric. In the best makes the fabric is Sea Island and Egyptian cotton, and much of it is sound and in usable condition for manufacture. It is readily salable at a higher price than the old rubber portions, owing to the greatly increased price of cotton textiles and the enormous demand for tire fabric. Reclaiming or "pulling" old tire fabric is comparatively a recent addition to the business of the scrap rubber dealer. Many tons of usuable fabric are recovered daily and find ready sale to the tire repair and rebuilding trades, and to manufacturers of tire reliners, blow-out patches, etc.

The salvaging operations on rejected tires provide profitable work for rubber scrap dealers who are developing it to the uttermost. The large scrap dealers are specializing extensively in automobile tire scrap. It is their business to receive old tire stocks from the collectors and sort them into recognized grades of the waste rubber market. These are officially described in circulars issued by the National Association of Waste Material Dealers and listed in the order of their relative value.

Sorting Old Tires

Sorting old tires is not a highly specialized operation, but a simple matter of skill in inspection and quick individual handling. The most expert sorting is picking out guaranteed makes suitable for rebuilding, which means selection of tires with perfect beads, only minor defects of fabric, a limited number of small blow-outs, and no rim-cuts or loose plies.

Repairable tires are graded into No. 1 Inners, which are good stripped carcasses; No. 2 Inners, containing only a single blow-out; and the ordinary repairables with more than one blow-out. Repairable tires are sold on a graded price-list according to damaged condition, the price running from 8 to 15 cents per pound. All unrepairable tires

are subjected to the processes of dissection for salvage of fabric and separation of the various rubber scrap qualities used by the trade.

Beading Old Tires

The first operation is the removal of the bead from the casing. This is quickly accomplished in a simple machine known as a bead trimmer.

The tire is thrown over the machine and rests on a series of rollers. On one side it is slipped over a crowned roller which fits the inner surface of the tire, while on the outside at the corresponding point is a circular knife. Pressure on a foot treadle revolves the tire by action of the crowned roller inside the tire and sends the circular knife down-

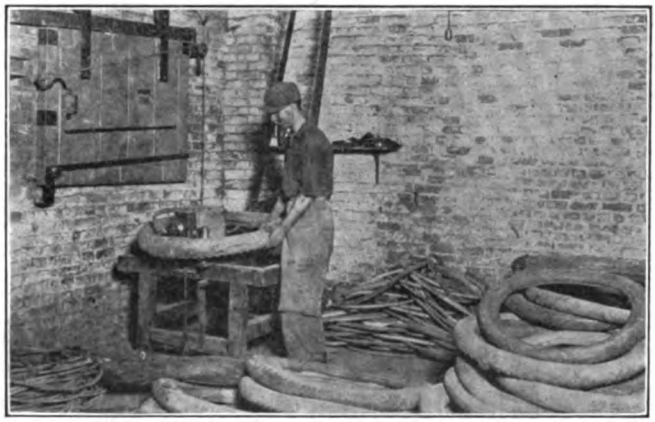

(*The Loewenthal Co.*)

Cutting Beads from Tire Casings

A partly severed bead is seen curving upward from the circular knife, and in the background is a pile of cut beads

ward through the tire side wall just above the bead, which is rapidly severed, allowing its removal by the operator. The tire is severed and by repetition of the operation the other bead is removed.

Bead Trimmers

Of the several bead trimmers on the market the best known are the following:

Johnston Bead Trimmer

This machine cuts off both beads of quick detachable or clincher tires in one operation. It has a crowned roll *A*, driven from the motor *B* by gears *C* and *D*. Two pressure feed rollers *E*, covered by shields *F* are held in contact with the roll *A* by springs *G*. Back of the feed rolls are circular knives covered by shields *H* and held down by springs

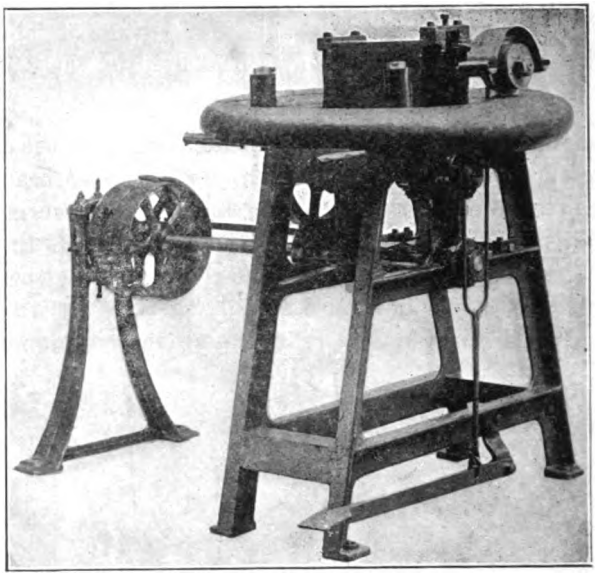

R. & D. Bead Cutter

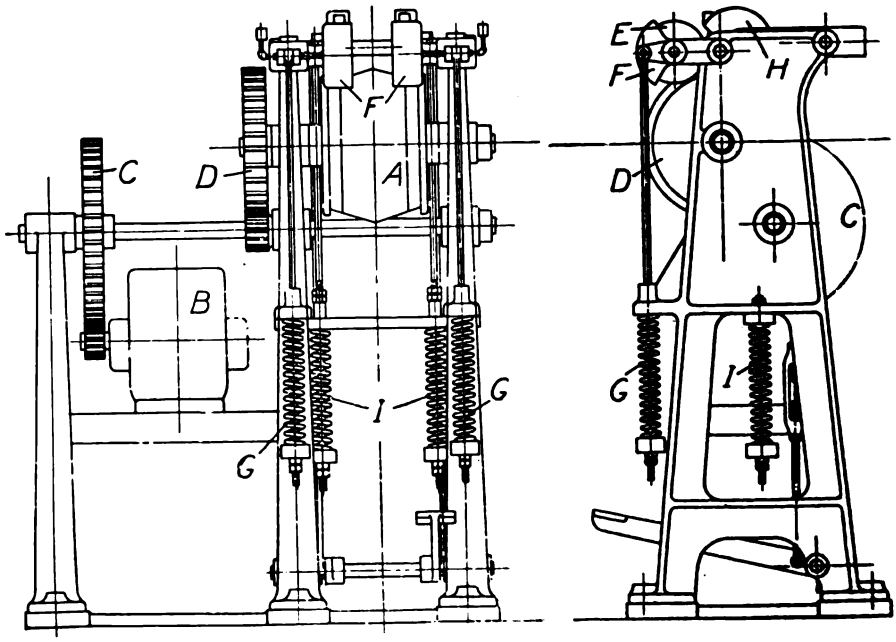

Johnston Bead Trimmer

I. The tire is cut and one end fed into the machine under the rolls *E* and the circular knives sever the beads from the casing. The cutters are adjusted to cut off beads of all sizes of tires up to 6 inches. With two operators the capacity is 25,000 pounds in 10 hours.

R. & D. Bead Cutter

The construction of this machine is extremely simple, and its operation may be clearly understood by referring to the illustration and the following brief description:

In removing the beads from clincher tires, the casing is placed upon the horizontal guides and the vertical rollers are adjusted to the

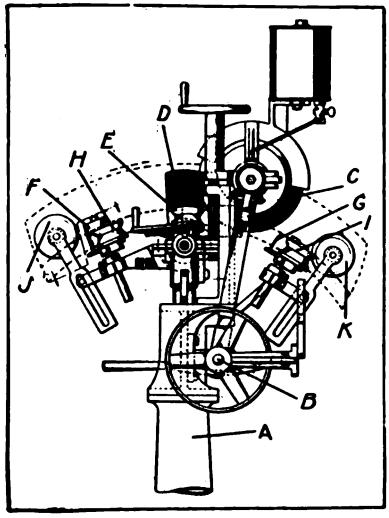

Maxwell Bead Trimmer

inner circumference of the tire. When the treadle is depressed the revolving cutter penetrates the wall of the casing and the pressure of the collars on the cutter arbor revolves the tires and the bead is quickly removed. The tire is then reversed and the other bead cut off in the same manner.

Maxwell Bead Trimmer

The machine is shown in side elevation and the position of the tire being operated on is indicated by dotted lines. The base *A* supports the belt-driven shaft *B*, to which are geared the cutting knife *C*, conical tire gripping roller *D*, bead roller *E* and conical driving roller,

not shown, that operates within the casing directly opposite the bead roller. The casing is guided and supported by inside rollers *F* and *G*, outside bead rollers *H* and *I* and outside supporting rollers *J* and *K*. These rollers are all adjustable to the size and type of casing to be trimmed. The power-driven cutting knife and the conical driving roller are adjusted by suitable hand wheels, while the bead driving roller is controlled by a ratchet and pawl operated lever.

In operation the guiding and supporting rollers are adjusted to the size of the casing and the cutting mechanism is raised to permit the tire being placed over the conical driving roller. The adjustable driving rollers are then swung into place and the cutting knife brought downward in operative position. When power is applied the casing revolves, water is applied to the revolving knife from an overhead tank and the bead is severed from the carcass. The tire is then reversed and the remaining bead is removed in the same manner, when the carcass is ready to begin stripping from it those fabric plies which still remain in suitable condition for numerous subsequent uses.

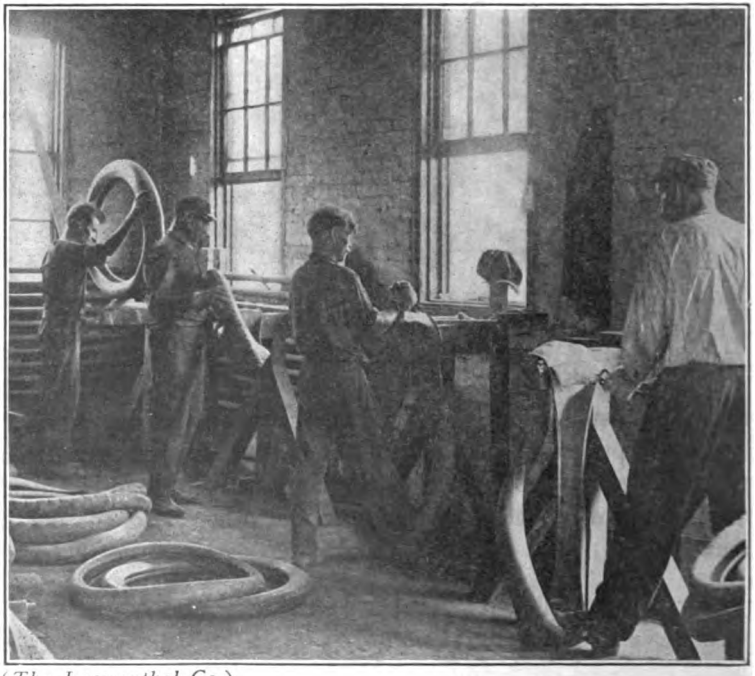

(*The Loewenthal Co.*)

STARTING FABRIC PLIES

The successive steps may be noted from left to right in the picture. Comprising reversing the tire, cutting, and starting the piles to be pulled

Starting the Plies

From the beading machine the carcass passes on to receive preparation for the operation of pulling out fabric plies. This preparatory operation is starting the plies by hand.

The conveniences for starting the plies of a bead-free tire carcass are extremely simple. They consist of a stout timber about five by eight inches and two feet long, supported horizontally at a convenient height for working. The tools consist of a screw-driver with a short blade, a short knife with a point curved after the manner of a pruning knife, and a heavy pair of ordinary hand-nippers.

The stages of the work of starting the plies are shown in succession in the illustration, beginning in the background. The worker places the carcass upon the beam or support, then depresses it as he turns it half inside out near the blow-out. Next he holds it securely in position on the support by resting a portion of his weight in the lower loop of the carcass, while with the point of the knife he cuts through the number of plies, three for example, which are to be started up for stripping. The cut is made near the blow-out and the plies separated across by means of the screw-driver. Once started, they are pulled back with the nippers a distance of about a foot. Following this the carcass is cut apart at a point just beyond the blow-out and is thrown aside ready for the pulling machine.

Pulling Fabric Strips

There are various machines used for pulling tire fabrics from the carcass, which not only lessen the labor cost but produce a uniform product with the rubber wholly on one side of the fabric while the opposite side is entirely bare. They comprise means for holding the tire and for seizing the free ply-end, also a power connection to effect the separation. Some pulling machines are arranged to separate the plies in long lengths from the endless tire, and others operate on cut tires. The one shown in the factory interior illustration is of the latter type, also the R. & D, fabric puller.

By suitable power transmission a proper ratio of speed is obtained between the pulling elements, one of which holds the end of the tire while the other serves as a wind-up for the separated fabric. The fabric, as pulled, winds in a roll on the pulling spindle from which it is easily removed. A convenient arrangement enables the operator to stop and reverse the mechanism whenever necessary, for he is obliged to pull up by hand an adhering bias end. The machine is actuated by a foot treadle and is speedy in operation. With such a machine a skillful workman

can strip 25 or more tires per hour, producing practically 1,000 pounds of pulled fabric per ten hours.

The tire treads from which all but one or two plies have been pulled are designated in the scrap rubber trade as "Auto Tread Stock" or "Dyke's Peelings." This is sorted by quality and color the same as the original tires and stored preparatory to baling for shipment to the rubber reclaimer.

Machine-made tires permit separation of single plies in continuous lengths from uncut tires. Wide pulled fabric is obtained by cutting away the edges of the tire beads and removing the plies full width, pull-

(*The Loewenthal Co.*)

PULLING FABRIC FROM TIRE CARCASSES
The tread stock winds on the drum while the pulled fabric winds on the spindle, each in opposite directions. The products may be noted on the floor and in the baskets

ing out the bead cores as they are exposed in the process. Fabric of this sort is especially adapted to tire rebuilding because of its width.

HIBBS FABRIC STRIPPER

A machine for separation of the fabric plies in continuous lengths is Hibbs fabric stripper.

The bead points are first trimmed off the old tire from which the fabric is to be stripped. The work is done with a six-inch expanding drum of the stripping machine. By means of a hand-crank the drum is expanded until the tire is held firmly. One ply of fabric is then cut through clear across from bead to bead. One edge of it is peeled back a short distance by means of a pair of pinchers until the end will reach once around the fabric shaft of the machine. This lever is

thrown forward, bringing the shaft near the tire, the free end of the fabric is wound around the shaft and the clutch engaged. After the shaft has made a few turns, it is drawn away from the tire to allow room for the accumulation of fabric on the shaft. While the fabric is being removed from the carcass, should it tear or a large blow-out be reached, the clutch is disengaged and the fabric around the bad place is peeled back with the aid of the pinchers. The operation of stripping the tire is continued until the level of the beads is reached.

At that point the tire is taken from the machine and the beads removed on a special machine. This machine is simple of operation and consists of a rigid stand, somewhat like a tire building machine with a locking device to hold the tire securely, and an arm actuated

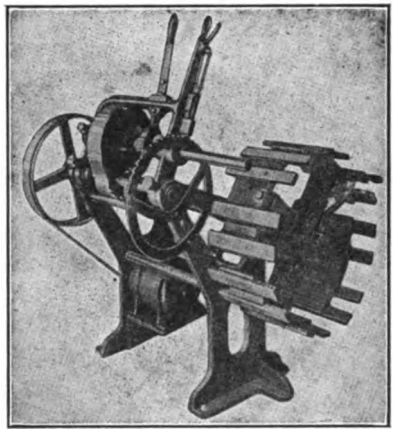

HIBBS FABRIC STRIPPER

by a hand lever. This arm is provided with an interchangeable tool, of which one end is ground for removing beads, and the other for cutting through the treads and first ply of fabric. The bead-removing tool engages the exposed bead, pushing it away from the tire for a space of about twelve inches, after which it is easily pulled from the tire.

After removal of the beads the tire is returned to the stripping machine and the remaining plies stripped as described, down to the ply next to the tread. This ply, usually filled was sand and dirt, is worthless for reuse, and is discarded with the attached tread and side wall rubber, as junk.

The cost of stripping fabric by this machine is relatively small as one man can strip the fabric from 1,500 to 2,000 pounds of tires per day.

Nall Tire Tread Slicing Machine

In reclaiming scrap tires the tread is removed prior to placing the carcass in the acid baths, by slicing off the tread by hand, which results in uneven work and is a relatively costly operation. The machine here shown in sectional elevation severs the tread by action of a reciprocating knife and provides means for supplying water to facilitate the cutting operation.

The beads are first removed and the tire is fed between the rollers *A* and *B*, the center portion of the former being cut away to accommo-

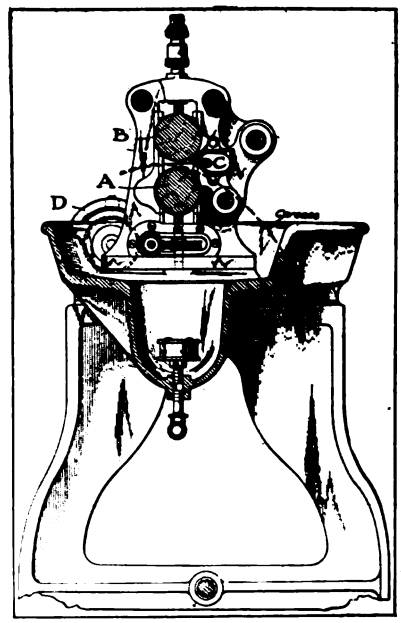

Nall Tire Tread Slicer

date the bulge of the tire flattened between the rollers. The knife *C* reciprocates horizontally but is fixed vertically, consequently the upper roller *B* must be adjusted vertically until the correct thickness of the tread is gaged between the knife and the bottom periphery of the idler roller *B*. The vertical adjustment of the lower roller *A* is made by the hand-wheel *D*.

When power is applied, the knurled portions of the lower roller engage the inner surfaces of the tire side walls, drawing the tire between the rollers while the reciprocating knife slices the tread. A pump

supplies a continuous flow of the cutting lubricant that collects in a lump, is strained and delivered to the pump line for reuse.

Stripping Tire Beads

Tire beads, cut from the tires as described above, contain a core of wire or hard rubber surrounded with rubberized fabric. The latter has distinct value and is removed for rubber reclaiming purposes.

(*The Loewenthal Co.*)

Stripping Tire Beads

Boiled, hot, cut beads from the tank at the left are readily stripped from the cores and form the pile at the right

Hard rubber bead cores, ground fine, are used as a filling in low-grade molded rubber goods, mats, matting, etc.

Stripping Bead Fabric

The bead circles from the bead trimmer are cut once preparatory to prolonged boiling in a tank of water or live steam, where the grip of the fabric on the core is loosened. The stripping could be done by machine, but ordinarily is accomplished by hand power.

A workman with pliers frees the fabric from one end, placing the exposed core or center in the grip of a pair of tongs hanging overhead, and by direct pull strips down the covering material of fabric and rubber, known as "coreless beads."

Grades of Salvaged Rubber and Fabric

A descriptive list of qualities of rubber and fabric salvaged or dissected from discorded automobile tires follows:

Repairable Tires.

Stripped and Road-Worn Tires. Casings as rejected by the motorist. They are valuable chiefly for the friction rubber reclaimable.

Beadless Tires. Beaded but not stripped.

No. 1 Peelings. Rubber stock free of fabric cut by hand from tread and side walls.

No. 2 Peelings. Similar to No. 1 peelings, but containing breaker and some building fabric.

Auto Tread Stock (Dyke's Peelings). The fabric carcass minus beads and three or four plies of salvaged duck plies.

Coreless Beads. The material stripped from the cut beads.

Ground Bead Cores. This stock is no longer valued and has dropped from the market because of its low grade.

Buffings. This is a by-product produced in the manufacture of new tires and inner tubes, and in the operations of tire repair men.

Pulled Automobile Fabric. Single or multiple-ply as specified. This is a recent development and is extensively used in rebuilding and repairing tires, and the manufacturer of tire boots or patches and reliners; also in the manufacture of a variety of small rubber articles where strong fabric is required.

Pulled tire fabric is now an important item of supply in the automobile tire accessory, tire repair and rebuilding trades. Reliners and blow-out boots made up from sound pulled fabric, properly repaired, are recognized as equal in serviceability to such articles produced from new fabric. The extensive demand existing for this merchandise made from salvaged fabric has induced some members of the large scrap rubber organization to specialize in its manufacture.

Preparing Stripped Fabric for Tire Rebuilding

After the old fabric is stripped from the tire, it is prepared for use by dipping in a large cement vat and hung up on wires to dry. This dipping process may be repeated if found desirable, and dipping it twice is recommended; first in a thin solution of cement, allowing it to dry, and then dipping it in a heavier solution. When this fabric is thoroughly dry, it is used in the same manner that new fabric is used. In rebuilding, this reclaimed fabric is much more easily and rapidly used as it is already cupped to fit the tire and, having this core shape, there is less danger of it being improperly applied.

Patented Uses for Pulled Tire Fabric

Salvaging fabric in scrapped goods is by no means new. Thirty years ago a mechanical goods factory stripped the fabric from scrapped

hose, dipped it in cement and made it up again into garden hose which sold at a very low price.

Quite apart from tire repair and manufacture, many new uses are being found for pulled tire fabric. During the year 1919 several patents were taken out both in the United States and abroad for using this fabric either with its rubber content or without.

Under F. L. Harley's United States patent No. 1,285,992 a new built-up fabric product is made by stripping the rubber from the tire carcass and subjecting the fabric body to heat and heavy pressure in order to thoroughly compress the rubber particles with which the fabric is impregnated and to vulcanize the two together. The resultant stock is then cut into pieces of proper size and shape for the purpose intended, the waste being ground up, reduced to a mass, spread over and by pressure applied to the cut pieces, thereby forming a built-up stock.

J. J. Dettling and E. A. Tinsman in United States Patent No. 1,309,118 protect a method of stripping the built-up plies of fabric of a tire carcass from each other and reshaping segmental portions with the addition of rubber into leggings of fixed shape and outline.

According to British patent No. 121,043 of 1919, attachable soles and heels, heel tips and protectors are made by vulcanizing a layer of rubber or rubber substitute on to a foundation of waste canvas from tire covers or waste balata belting.

U. Chandeyson's French patent No. 488,989 of 1919 covers the utilization of used or unused pneumatic tires for the manufacture of soles, heels, shanks and uppers for shoes; of gaiters, saddle bags, etc.; and more generally of all articles of rubber or rubberized fabric.

Another French patent, No. 490,382 of 1919, granted to V. C. Thénant and L. Méliorat, is for the utilization of pneumatic tire casings for making lounging shoes of all kinds.

The Future Outlook

Probably this is but the beginning, and many patents along these lines will follow. Converting old tire materials to new uses promises to become a great business in itself. Outlets for the stripped fabric are already developing rapidly, which takes care of one of the two principal factors. And new uses for great quantities of low-cost reclaimed rubber will soon be found to take care of the other factor. This latter field is one for the opportunist, the rubber chemist and the man of vision.

CHAPTER XLIX

THE TIRE INDUSTRY TODAY

WITH the increasing demand for automobiles the tire industry has developed wonderfully. Enormous factories have been erected, thousands of workmen employed and a business developed that forms the largest unit in rubber manufacture.

The growth of the rubber tire industry is well reflected in the patents issued by the United States Patent Office. Fully one-half of the American patents issued in 1916 relating to rubber apply to rubber tires, treads, tire-building, tire-repair machines, rims, etc. In 1906 the value of the American tire product was only about $9,000,000. The production of 3,500,000 pneumatic tires in 1911 was considered large, but the census of 1914 showed 290 firms manufacturing 8,020,815 automobile tire casings valued at $105,671,223.00; 7,906,993 inner tubes valued at $20,098,936.00; solid tires valued at $13,735,681.00; and 3,728,138 motorcycle, bicycle and airplane tires valued at $6,905,852.00, the whole amounting to $146,411,692.00, or nearly 49 per cent of the total rubber manufactures, which were valued at $300,251,827.00.

In 1917 pneumatic tire production alone had reached 25,300,000 tires. For the manufacture of pneumatic casings and tubes for automobiles, motorcycles, airplanes and bicycles, also solid tires and tire sundries, 241,021,233 pounds of crude rubber and 47,053,169 pounds of reclaimed rubber were used, these amounts being respectively 73 and 24 per cent of the total amounts consumed that year for all purposes in the United States. In other words, the United States that year used for tires alone more than half as much crude rubber as the rest of the world consumed for all purposes. The total tire business of these other countries hardly exceeded one-fifth that of the United States. The 1920 tire business was nearly double that of 1917 and exceeded a billion dollars in value.

Tires Carry More Than Steel Rails

It is not surprising that automobile tire manufacturing has become the principal department of the American rubber industry when it is realized that motor vehicles have come into such general use in the United States that they actually carry more than steel rails.

Rubber-tired vehicles provided a passenger and freight service in the United States estimated at $1,725,000,000 for the year 1916, a total so enormous that more and better highways now constitute the greatest transportation need in America. This conclusion was based upon the startling figures presented by Alfred Reeves, general manager of the National Automobile Chamber of Commerce, at the highway engineering meeting held in New York, December 28, 1916. They show that automobiles were even then rendering a greater passenger transportation service than all the steam railways of the country, or than all the urban and interurban electric roads combined, and that the automobile freight traffic is also assuming enormous proportions.

Where in the past the railroad did most of the "short haul" business, today the truck is taking it over quietly and efficiently. As fast as usable roads are built the truck does the freighting. Motor trucks are already widely used in transporting freight from town to town and from farmer to market, and it is to the interest of all shippers to promote this method of transportation as much as possible. The motor truck solved the freight congestion problem of the railroads during the winter months of 1917 and 1918, and they were called upon on a much larger scale for the winter of 1919 and 1920.

Once motor roads parallel railroads, a general railroad strike would be an impossibility, for automobiles would take care of the passengers, and trucks of the freight. The tire manufacturers are helping toward such preparedness to a notable degree, and the production of heavy service tires, particularly pneumatic, for use on what are known as "freight car trucks" seems destined to increase notably in the next year or two.

According to the Bureau of Railway Economics the steam railroads carried 1,053,000,000 passengers in 1914, with little increase in 1916, an average distance of 33 6/10 miles, or a total of 35 1/4 billion passenger miles, and earned a revenue of $700,400,000 on this service. By comparison, the 3 1/4 million passenger automobiles then registered in the country, averaging 5,000 miles a year, and three passengers per car, gave a service of 48 3/4 billion passenger miles, worth $975,000,000 on the railroad basis of two cents per mile, or over $200,000,000 more than the railroad passenger service.

The street and electric railroads carried 9 1/2 billion passengers in 1912 (the latest year for which official figures were available). The average distance traveled was four miles, making 38 billion passenger miles. This produced a little more than half a billion dollars, averaging 1 1/3 cents a mile. At this rate of fare, the automobiles rendered

a service in 1916, of $598,500,000 or about $98,000,000 more than the street railways.

The 250,000 commercial motor vehicles then registered in the country, averaging 50 miles a day, half the distance with an average load of two tons, gave a total of 3 3/4 billion ton-miles. Taking 20 cents per ton-mile as a fair average cost of hauling by horse-drawn vehicles on the public roads, this was worth $750,000,000.

The Growth of the Industry

Since these surprising computations were made the total American automobile registration has increased over 2½ times.

That the phenomenal growth of the tire industry is due chiefly to the enormous and steadily increasing use of the automobile for both business and pleasure is indicated by the rapidly advancing motor vehicle registration for recent years and the fact that only about 2½ per cent of the tire product is being exported. The United States consumes practically all the tires it makes.

American Motor Vehicle Registration

Year	1914	1915	1916	1917	1918
Cars	1,711,339	2,445,664	3,512,996	4,983,340	6,146,617
		1919	1920		
		7,558,666	9,211,295		

The total 1918 registration of 6,146,617 cars represented a gain of 23 per cent over 1917; the 1919 registration of 7,558,666 cars, a gain of 23 per cent over 1918; that of 9,211,295 cars in 1920, a gain of 22 per cent over 1919. Five states—New York, Ohio, Pennsylvania, California and Illinois, named in their relative order—have about one-third of the total registration of the whole country. Their 3,107,050 motor vehicles is over 81 per cent more than the combined registration of the entire world exclusive of the United States.

Of the entire world registration of passenger cars and trucks, numbering 10,922,278, 83 per cent are in the United States. In other words, there are nearly 5½ times as many cars in operation in the United States as in all the rest of the world. It is interesting also to note that in 1914 the United States had more motor vehicles than all the rest of the world now has.

Assuming five tires per car as the average annual consumption in 1913 and three and one-half tires per car the present consumption, owing to the wider use and longer life of cord tires, the American demand for tires has grown from about 6,275,000 in 1913, to about

32,239,532 in 1920, or more than five times that of 1913. On the same basis, the 1920 tire demand for the rest of the world was only 5,988,-440, tires.

American Tire and Tube Production

During the past seven years the American pneumatic tire and tube production, actual and estimated, has been as follows:

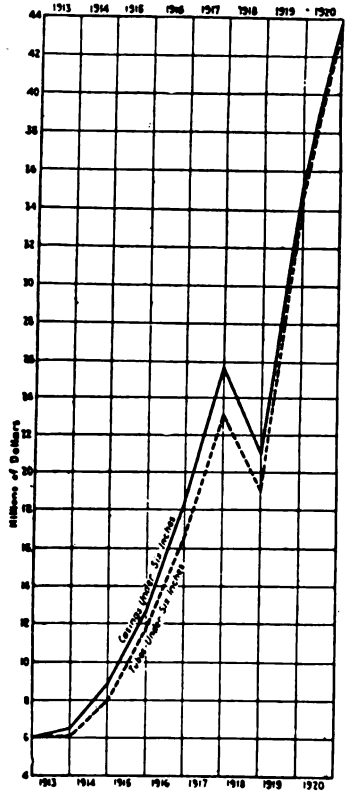

Tire and Tube Production

Year	1914	1915	1916	1917
Casings	*8,983,000	*12,840,000	†18,564,957	†25,840,656
Tubes	———	———	†16,785,398	†23,256,752
	1918	1919	1920	
	*21,000,000	*35,000,000	*43,750,000	
	*19,000,000	*34,500,000	*43,125,000	

* Estimated.
† Under six inches.

It will be seen that the 1917 output showed an increase to nearly four times the output for 1913. Although production in 1918 was curtailed to about 85 per cent of the 1917 output, the 1919 production showed an increase over 1917 of 23 per cent in casings and 48 per cent in tubes. In 1920 the production of casings and tubes increased about 25 per cent. At an average of $25 per tire, the retail value of the 1920 product of casings was about $1,093,750,000, to which may be added $172,500,000 for the tube production at an average of $4.00 per tube, making a total of $1,266,250,000.

American Crude Rubber Consumption for Tires

For the manufacture of the tires and tubes mentioned above the consumption of crude rubber was as follows:

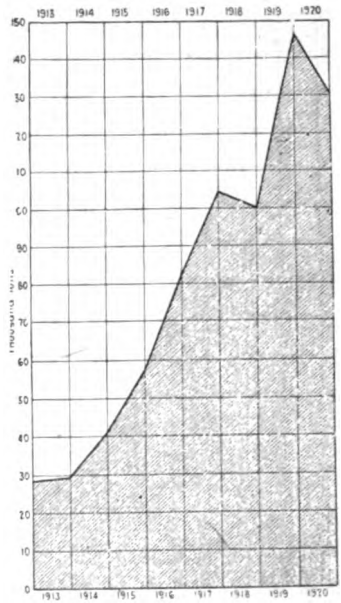

Crude Rubber for Tires and Tubes

Automobile and motor truck		1918*	1919*	1920
Casings, ...	*pounds*	150,000,000†	225,000,000†	204,852,163
Inner tubes	"	35,000,000†	48,000,000†	51,025,392
Solid tires	"	48,000,000	40,000,000	26,482,247
Other tires and sundries ..	"	15,000,000	12,000,000	10,075,927
Totals	"	248,000,000	325,000,000	292,435,729

*Estimated.
†Under 6 inches.

Only the estimated total weights are available for the years 1913-1916. They are in pounds; 1913, 65,880,000; 1914, 89,830,000; 1915, 128,400,000; 1916, 185,649,570. The total 1917 consumption was 233,386,796 pounds. As compared with these figures, only 47,907,520 pounds of rubber were required to manufacture the 5,988,440 tires required to meet the 1920 world demand exclusive of the United States, assuming 8 pounds of rubber per tire.

In 1920 some 51 per cent of the total India rubber imports into the United States was used for tires and tire sundries as against 60 per cent in 1919, 75 per cent in 1917 and 58 per cent of the imports for the fiscal year 1913, indicating the greater supply of the raw material. The actual quantity of crude rubber used in 1920, however, was not quite 4½ times that for the year 1913, as against almost five times the 1913 quantity in 1919 and about 3½ times that for the year 1917.

American Tire Demand for Original Equipment

Statistics of motor vehicle production in the United States indicate the increasing number of pneumatic and solid tires required annually for original equipment.

Motor Vehicle Production

Year	Passenger Cars	Motor Trucks	Totals
1913	461,500	23,500	485,000
1914	543,679	25,375	569,045
1915	818,618	74,000	892,618
1916	1,493,617	90,000	1,583,617
1917	1,740,792	128,157	1,868,947
1918	926,388	227,250	1,153,637
1919	1,657,652	316,364	1,974,016
1920	1,883,158	322,039	2,205,197

Only a cursory inspection of these figures is necessary to see how the production of passenger cars and correspondingly of pneumatic tires under six inches was curtailed by the war situation of 1918, and the production of trucks and truck tires stimulated. Truck tire production for original equipment has shown continuous growth during and since the war period. In 1918 it had increased to over 9½ times the 1913 production for this purpose and in 1920 to over 13½ times the 1913 production. In 1920 pneumatic tire production for the original equipment of passenger cars exceeded the previous high figure for the year 1917 by 569,464 tires, and exceeded the 1919 requirements by 902,024 tires, this being over four times the 1913 output. It is seen, therefore, that while 1,940,000 tires sufficed for new equipment in 1913, no less than 7,475,888 were required in 1917, and 8,820,788 in

1920, an increase to over 4½ times the 1913 requirements. During the past year both the greater volume of increase and the greater rate of increase have been in pneumatic tires under 6 inches, as distinguished from large pneumatic and solid tires for trucks.

As to the 1921 production of motor vehicles and tires for original equipment, estimates vary rather widely. Prophets, of course, are as fallible as those who do not venture opinions. Furthermore, the major part of all prophesies fail. However, business conditions throughout the country are such that, with an abnormal number of used cars on the market, it seems unlikely that the 1921 production of motor vehicles

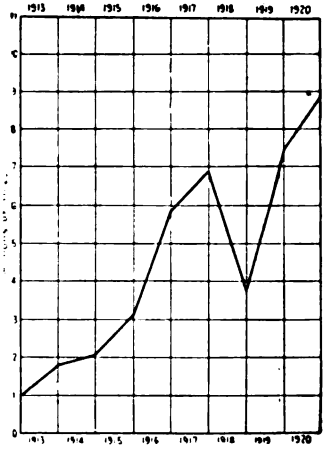

PASSENGER-CAR TIRES FOR ORIGINAL EQUIPMENT

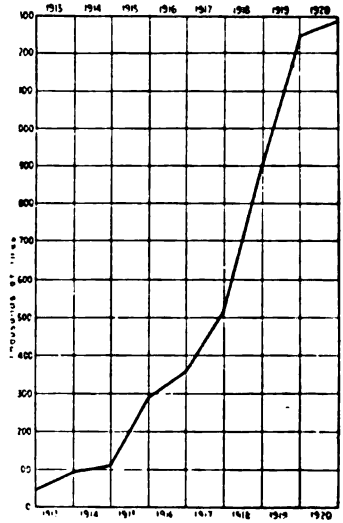

TRUCK TIRES FOR ORIGINAL EQUIPMENT

will exceed 75 to 80 per cent of the 1920 output, say, 1,500,000 passenger cars and 250,000 trucks, the total 1,750,000 vehicles requiring 7,000,000 tires for original equipment.

TIRES IN USE IN THE UNITED STATES

Of the 9,211,295 motor vehicles registered in the United States during the calendar year 1920, some 990,000 were trucks, so that nearly 8 1/3 times as many pneumatic tires under 6 inches as truck tires were in use last year, the number of each sort, exclusive of spares, being approximately 32,885,180 pneumatics under six inches and 3,960,000 truck tires. One additional tire per car would be a conservative estimate for spares, making the totals, 41,106,475 pneumatics

and 4,950,000 truck tires. With 46,056,475 motor vehicle tires in use it is not surprising that some 30,000 vulcanizers are kept busy with repairs and retreading.

On the basis of 40 pounds of rubber average per car for regular equipment and one spare, a total of 368,451,800 pounds of rubber had been consumed in manufacturing the tire casings in use in the United States last year, an amount greater than the total India rubber imports of the United States for the calendar year 1918, and equal to nearly 54 per cent. of the United States India rubber imports for the calendar year 1920. On the same basis, only 68,439,320 pounds of rubber had been consumed in manufacturing the tire casings in use in the entire world exclusive of the United States.

Consumption of Automobile Tires In 1920

Rubber company statisticians in Akron estimate that the 9,211,295 motor vehicles registered in the United States in 1920 require about 32,000,000 tires annually to replace those worn out at the rate of 3½ tires per vehicle. This estimate admits a small allowance for solids used on trucks.

Tire consumption thus averages about 2,700,000 each month, exclusive of tires needed for new equipment.

Estimates of tire consumption have not as yet, so far as known, been based on tire mileage and gasoline consumption. Such a basis, however, offers an opportunity to estimate probable rather than average monthly totals of the number of tires consumed.

In the figures given by the United States Bureau of Mines the domestic monthly consumption of gasoline is given in gallons. Since these figures include gasoline consumed for all uses a reduction is necessary to determine that used by passenger cars only. The allowance to cover all other uses has been taken at 20 per cent.

The ratio between tires and gasoline consumed is based on reported official cost data[1] modified by the statement of the American Automobile Chamber of Commerce that 70 per cent of the cars registered are classifiable as small and 30 per cent as large. The average number of miles per gallon of all cars is thus taken at 17 miles. The average usefulness of a pneumatic tire is taken at 5500 miles. The ratio of worn out tires to gallons of gasoline is thus found to be one to 100. In other words, one per cent of the gallons of gasoline consumed represents the number of tires consumed; thus every 100,000 gallons of gasoline represents 1000 tires.

[1]Operating Cost Record of 65 Motor Vehicles in the Los Angeles Water Department, Engineering Record, June 3, 1916, pages 728-732.

In Table I the monthly domestic consumption of gasoline is given as far as available and the estimated corresponding numbers of tires consumed. It is interesting to note that the method adopted results in a total annual consumption of 34,065,000 tires. This practically agrees with the generally accepted trade view and is not greatly in excess of the figure of Akron experts quoted above.

TABLE I

MONTHLY CONSUMPTION OF GASOLINE AND TIRES

	1917		1918	
	Gasoline, Gallons	Tires	Gasoline, Gallons	Tires
January	.....	875,000	143,967,669	1,155,000
February	.....	885,000	147,204,377	1,175,000
March	.....	1,325,000	219,462,185	1,755,000
April	.....	1,600,000	265,151,411	2,120,000
May	.....	1,880,000	311,524,603	2,500,000
June	.....	1,850,000	303,255,608	2,460,000
July	529,630,336	2,090,000	352,589,555	2,820,000
August	268,478,623	2,150,000	337,659,668	2,700,000
September	245,475,851	1,960,000	284,435,982	2,275,000
October	207,049,371	1,660,000	298,186,557	2,385,000
November	166,703,910	1,350,000	245,269,244	1,960,000
December	163,183,611	1,300,000	210,116,502	1,680,000
Totals	2,694,704,251	18,925,000	3,074,791,178	24,985,000

	1919		1920	
	Gasoline, Gallons	Tires	Gasoline, Gallons	Tires
January	169,256,877	1,355,000	238,204,518	1,905,000
February	185,900,192	1,490,000	248,395,214	1,990,000
March	204,004,317	1,610,000	256,020,539	2,055,000
April	243,440,615	1,950,000	297,001,120	2,375,000
May	328,277,648	2,625,000	378,912,672	3,030,000
June	305,960,438	2,450,000	427,242,862	3,420,000
July	397,591,158	3,180,000	434,868,997	3,525,000
August	376,484,274	3,010,000	479,741,391	3,840,000
September	366,625,742	2,835,000	450,888,670	3,510,000
October	338,429,709	2,700,000	384,802,246	3,080,000
November	284,620,049	2,275,000	366,831,265	2,935,000
December	238,245,230	1,900,000	300,000,000*	2,400,000
Totals	3,437,960,726	27,380,000	4,262,909,494	34,065,000

*Estimated.

Tires consumed monthly from 1917 to 1920, inclusive, are charted in graph A. The similarity in seasonal distribution indicated is notable, as well as the rapid growth which parallels the annual increase in vehicle registrations.

A preceding table records the official registration of motor cars in the United States for the period from 1914 to 1920, and the figures are charted in Graph B.

Total American Tire Demand for 1921

It is estimated that the 9,211,295 motor vehicles registered in the United States in 1920 will require about 32,239,532 tires annually to replace those worn out at the annual rate of 3½ tires per vehicle. To this may be added the 7,000,000 tires likely to be required as original equipment for the 1921 production of some 1,750,000 passenger cars and trucks, making a total visible demand for 39,239,532 tires.

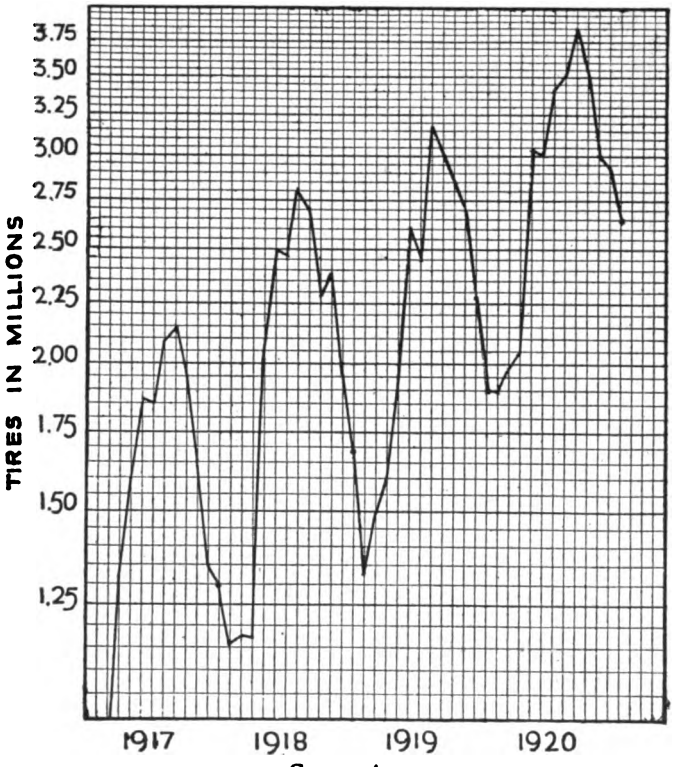

Graph A
Tires Consumed Monthly In Millions

That this total appears to be a conservative estimate is indicated by adding 22 per cent—the increase in motor car registration for the year 1920—to the estimated 1920 tire consumption amounting to 34,065,000 tires, as shown in The India Rubber World of March, 1921, page 410, which indicates a demand for 39,559,300 tires. Thus, despite the temporary sales depression of the spring and early summer, the future of the tire industry cannot be viewed with other than assurance.

The Future American Tire Demand

Looking farther into the future, leading automobile men assert that the point of saturation will not be reached until every family having an annual income over $1,000 owns a car. This means not less than 15,000,000 cars; and assuming an average life of five years

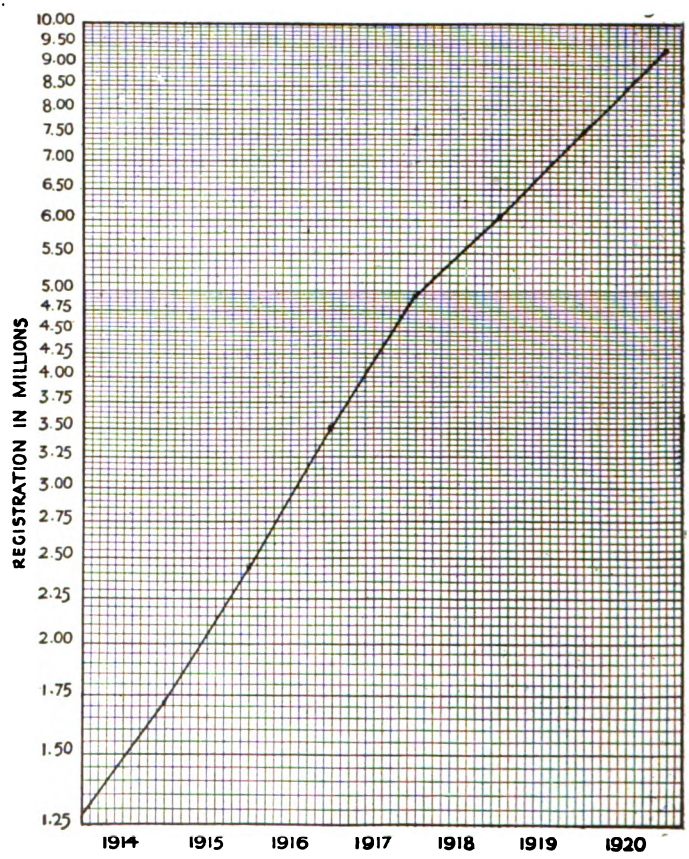

Graph B
United States Motor Vehicle Registration 1913-1920

per machine, an annual replacement of 3,000,000 cars will be necessary to maintain 15,000,000 cars in operation. Translating this into tires, and again assuming 3½ tires per car as the average yearly consumption for 12,000,000 used cars and five tires per car for 3,000,000 new cars, the total 15,000,000 cars will require 57,000,000 tires and tubes annually, a business amounting to some $1,653,000,000.

United States Tire Exports

Export trade is becoming an increasing part of the American motor tire business, as shown by the following statistics compiled by the Bureau of Foreign and Domestic Commerce.

Automobile Tire Exports

Exported to:	1913*	1914*	1915*	1916*
Europe	$1,977,029	$1,764,240	$2,745.450	$10,992,184
North America	1,626,155	1,254,200	1,187,632	2,184,874
South America	100,065	115,387	214,068	1,050,398
Asia	36,212	64,173	73,430	477,895
Oceania	185,807	279,327	702,877	2,896,401
Africa	17,952	27,940	39,813	334,475
Totals	$3,943,220	$3,505,267	$4,963,270	$17,936,227

Exported to:	1917*	1918*	1919†	1920†
Europe	$3,480,114	$1,460,518	$11,907,480	$18,554,782
North America	3,186,265	4,474,713	5,188,317	7,193,918
South America	2,596,936	3,432,181	4,986,024	6,426,412
Asia	810.300	1,194,551	2,970,464	5,220,430
Oceania	1,832,244	2,662,422	3,177,431	3,953,506
Africa	424,342	753,286	694,943	2,550,546
Totals	$12,330,201	$13,593,420	$28.924,659	$43,899,594

*Fiscal year ended June 30. †Calendar year.

A study of these figures reveals several facts of interest, particularly the remarkable growth of the tire exports to the entire world, notably to Europe and to Oceania, Asia and Africa. The combined value of the 1920 business in the three divisions last named was nearly 50 times the value of these exports in 1913. Tire exports to Asia have increased constantly, the 1920 total being 140 times that of 1913 and 40 per cent. greater than that of 1919. Exports to Oceania fell off in 1917, but the following year had nearly reached the high mark of 1916, and have since increased rapidly.

North American exports were adversely affected in 1914 and 1915, but thereafter grew steadily, the 1920 business showing a large growth over 1919.

The South American trade maintained a continuous and remarkable growth from 1913 to 1920 inclusive, the value of the 1920 exports being more than 60 times that of 1913.

Exports to Africa grew steadily until 1918, when their value reached some 42 times that of 1913, but showed a falling off of about 7¾ per cent for the calendar year 1919 as compared with the fiscal year 1918. The 1920 business, however, increased to over four times the value of that in 1919.

European exports have fluctuated greatly owing to the war. In 1914 they decreased a little, but increased considerably in 1915 and

in 1916 jumped to more than five times their value in 1913, after which they declined steadily, the value of the 1918 shipments being only about 74 per cent of the 1913 value. The 1919 exports, however, exceeded the banner year 1916 by more than 8 per cent, showing an increase to more than 6 times the 1913 value, and the 1920 business was over $18,500,000.

Total tire exports to all countries fell off in 1914, but gained in 1915, jumped during 1916 to about 4¾ times as much as in 1913, dropped considerably in 1917, but showed a noticeable gain in 1918 and have increased ever since. Automobile tire exports for the calendar year 1919 amounted to more than double the value for the fiscal year 1918, and for 1920 were over 50 per cent more than for 1919. It may be said, therefore, that despite the fluctuations of 1914 to 1917 inclusive, and the lower rate of increase last year, American automobile tire exports have shown a great and steady growth, the value of the foreign business in 1920 having increased to over 10 times what it was in 1913.

The Export Outlook

Great events of such an elementary force as a world war result in an upheaval of all the ordinary standards of life. Progress advances at a higher sped than during normal times and the world experiences the evolution of a century in the comparatively short space of a few years. As to the rubber industry, it emerges from the war as a powerful factor in the economic life of the world.

This development cannot fail to exert a strong influence on our domestic rubber industry in its relation to both home and foreign markets. Considering the enormous strides made by the American rubber industry in the expansion of its foreign influence, it is the effect upon foreign markets which will undoubtedly receive the greatest attention from our manufacturers. The average manufacturer or exporter is inclined to look upon foreign trade as a matter of orders and delivery. The great economic factors operating in the world's markets do not apparently concern him and he does not trouble about the development of favorable trade prospects. This policy has been especially noticeable in our own country. It has marred for a long time our politically and economically desirable trade relations with South America and it is again interfering very seriously in our relationship to our former allies in Europe. It is, however, the comprehensive understanding of the present and future requirements of a market which develops the successful exporter. Only the manufacturer who makes himself useful to his customer can expect to acquire

his permanent confidence. It is, therefore, necessary that American rubber manufacturers should be conversant with the economic tendencies underlying the development of markets for American rubber goods.

The American rubber industry can easily be called the most powerful and progressive of the rubber industries of the world. No country has provided during peace times so many difficult problems for the rubber chemist and engineer as our own, and it is only our somewhat provincial habits which have prevented the American rubber industry from taking first place as an exporting industry in the years before the war. Matters have now changed. We have been forced to take a hand in international affairs and the rubber industry was burdened with an unusual load of foreign orders which cost a great deal of exertion to fill. In the future we shall receive automatically a share of the export business of the world and this will be measured more or less by the general ability of our industry to supply the demand. This share in foreign trade flows as a natural result of international trade exchange to any leading industry of any country. It is the tribute due to the existence of a powerful economic producer. The successful exporter, however, cannot wait to let others determine his share of the business of the world. By making use of the existing opportunities he must obtain a larger proportion of the trade. And such opportunities are now especially numerous. It is reported that the European automobile industry will start building small passenger and carrier automobiles on American lines, adopting, if possible, the design of American rims and tires. The outcome will be a greater demand for small American tires, not only in Europe but in other parts of the world where European automobiles will be sold.

The Foreign Exchange Situation

The decline in exchange upon America has resulted in a considerable disorganization of American foreign trade which has found its principal expression in a general disinclination of American exporters to accept anything but dollars in payment. It is now agreed that the present situation, if left to continue, is likely to lead to a general breakdown of our trade, as foreign countries will hardly be inclined to buy American merchandise upon the basis of the present exchange rate as against the high price of the dollar. Exporters of rubber tires and other rubber goods have received many cancelations of foreign orders during the past months and are inclined to attribute this condition exclusively to the exchange situation. They hold that

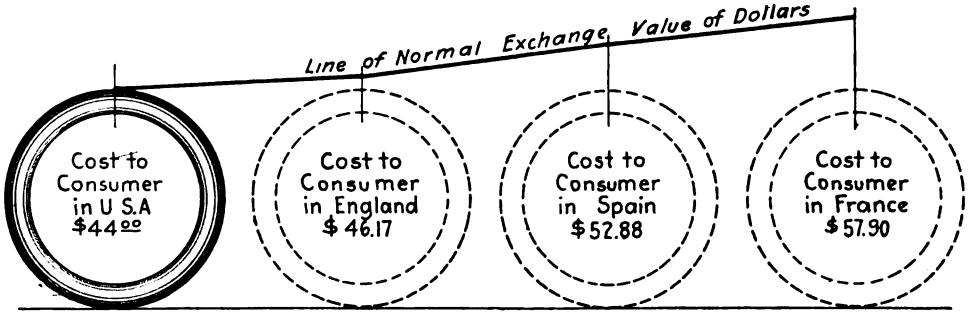
Line of Normal Exchange Value of Dollars
Cost to Consumer in U S.A $44.00
Cost to Consumer in England $ 46.17
Cost to Consumer in Spain $ 52.88
Cost to Consumer in France $ 57.90

PRICES OF TIRES CORRESPONDING TO THE AMERICAN 34 BY 4½-INCH FABRIC TIRE IN ENGLAND, SPAIN AND FRANCE, WITH UNITED STATES MONEY EQUIVALENT AT NORMAL EXCHANGE RATES

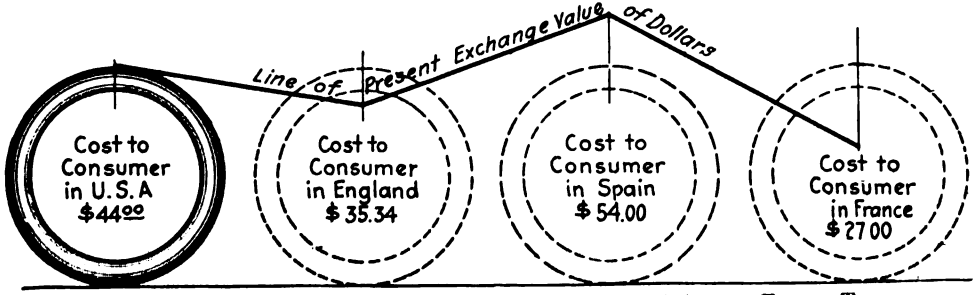
Line of present Exchange Value of Dollars
Cost to Consumer in U.S.A $44.00
Cost to Consumer in England $ 35.34
Cost to Consumer in Spain $ 54.00
Cost to Consumer in France $ 27.00

PRICES OF TIRES CORRESPONDING TO THE AMERICAN 34 BY 4½-INCH FABRIC TIRE IN ENGLAND, SPAIN AND FRANCE, WITH UNITED STATES MONEY EQUIVALENT AT PRESENT EXCHANGE RATES

the American rubber industry is in danger of becoming incompetitive in the international field. Several remedies have been proposed; so far, however, no action has been taken, principally because of the lack of a basis upon which a settlement can be obtained.

Tires and Exchange Rates

It will be shown in the following that the situation is by no means as serious as it appears on the surface, and that its disastrous effects upon international trade are not caused by the devaluation of foreign money itself but by the present frequent fluctuations of the market.

The situation most frequently quoted is that of an American manufacturer, say one making tires, negotiating for a tire contract in

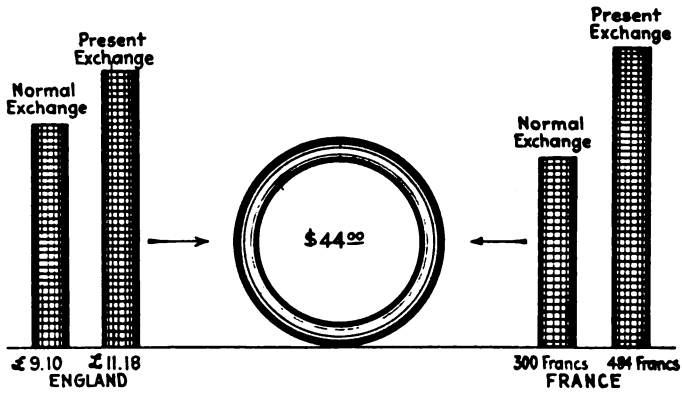

It is an Expensive Matter for the Purchaser to Buy an American 34 by 4½-inch Fabric Tire with the Depreciated Money of England and France

France or England. Let us assume the tire to be a 34 by 4½-inch fabric tire, of standard make and costing the consumer $44.00 in the United States. This tire at the end of 1919 cost in France 300 francs. It cost £9.10 in England, 274 pesetas in Spain, and approximately $37.80 United States currency in South America. Applying normal exchange, the dollar value of this tire would be $57.90 in France, $46.17 in England, and $52.88, approximately, in Spain. The normal exchange rate of the pound sterling is $4.86, of the franc 19 cents, and of the peseta 19 cents. On December 19, 1919, the following quotations were made in international dollar exchange; pound sterling $3.72, franc $.09, peseta, $0.191. If purchased in dollars, a tire equivalent to the American one could have been bought in England for $35.34, in

France for $27.00, and in Spain for $54.00, approximately, owing to the fractional increase of the cost of the peseta over par. On the other hand, the English purchaser of an American tire would have to pay £11.18, the French 484.88 francs, and the Spanish 270 pesetas, approximately. We have, therefore, the peculiar situation that one and the same tire can be purchased and sold at varying rates in each of these countries owing to the variation of the exchange.

Such a situation can act on the American tire trade in two different ways. It might enable tire importers in this country to purchase for dollars great quantities of tires in England or France and to sell them here at a cost very much below that for which they can be offered by other manufacturers. But it will also deter the French and English purchaser from buying tires in the United States at the practically prohibitive existing exchange rates of their respective money units. Also there is a third consideration: to which country will the world's markets go for supplies in the present situation, to the United States, to France or to England? But the present-day situation is only an incident of the overshadowing problem of international competitive ability of which it forms a part.

Competition in Production

The exceptional demand for rubber goods from domestic and foreign markets during the last years of the war put out of operation the ordinary rules of competition that govern the world's market in normal times. Goods were needed urgently and cost was no consideration. Under these conditions there was no difficulty for any manufacturer to sell at his own prices. It was a typical sellers' market with no string to it in any respect. But the conditions must change again; in fact they have already changed. The world's business can not be conducted permanently on a war basis, and after a while the rules of ordinary competition will return. The United States rubber industry will then find very strong competition from unexpected quarters. We know little yet about the actual conditions in Europe. The European rubber industry has operated during the war under high pressure. Rubber has generally come more into prominence, and the experience and knowledge of the war applied to modern manufacturing should give very effective support to the European rubber industry.

Competitive production is not only a matter of manufacturing method: it goes right down to the very roots of the industry. The ability to compete springs from the volume of the original investment,

of the productive capacity and cost of labor and from the effectiveness of the equipment. It depends upon the price of the raw material and the overhead expenses of the industry. We can, therefore, easily concede points to Europe for new inventions, and improvements in the method of the industry if we can only meet competition as to the cost of labor, materials and the general operation of our plants.

Raw Materials

If it should prove that we pay more for our raw materials, that our labor costs us more than it costs the European manufacturer and that our overhead expenses are higher, then we may very well experience a severe set-back in our industry. Europe will not only take away from us our recently gained export markets but it also may attack us in the domestic market.

There is little reason to expect that European rubber manufacturers should be able to buy their rubber much cheaper than our own manufacturers, and the chances are even that the scale may dip slightly in our favor. This chance is supplied by the present exchange situation.

What applies to the principal product, applies also to the supplementary ones, as the textile fabric in the tires, chemicals, etc.

Labor and Wages

The growth of the political influence of labor abroad has been followed in each instance by a rise in wages and it is this aspect of the situation which is of most importance for the future competitive position of the European rubber industry.

In England wages have gone up at rates varying between 75 and 100 per cent. Wage increases, however, have been generally more heavy on the European continent because wages were lower there than in England. In France, for instance, the rubber industry now pays easily 150 per cent more than it used to pay in pre-war days, and in Germany increases have been as high as 200 per cent and even more. We may take it for granted, however, that continental European wages in the rubber industry will settle down finally upon approximately the same level as that prevailing at the present time in England. This will bring about a great change in the competitive situation in Europe.

The European rubber industry has done an enormous non-European trade in former years, based principally upon its ability to sell at low cost. The European manufacturer had only little in his

favor in the purchase of raw materials; his chances to sell cheaply, practically speaking, rested entirely on his possibility of getting his work done at a low wage scale. On the strength of the cheaper European labor the European rubber manufacturer, therefore, was enabled to undersell his American competitor practically wherever they met in the world.

American wages in the rubber industry have grown exactly 100 per cent since the summer of 1914. But the chances are that the American wage movement has now reached its highest peak. When the end of the movement has been reached it will most probably show that American wages are still higher than the European wage scale but that the European scale is approaching more closely our own than was the case before the war. Our handicap would no more, therefore, be as extensive as it has been in former years and we might very well aspire to overcome it by making reductions in our overhead expense, a procedure in which we have acquired much experience.

Overhead Expenses

Overhead expenses in the rubber industry are comparatively high. They comprise approximately 25 per cent of the sales price of the ready product at the factory door. Like all other forms of manufacturing expenditure they have grown considerably during the last year in this country, but they have grown still more rapidly in Europe.

Summary

We have, therefore, so far established the following facts:

The purchase price of a French or English tire, if bought with American money, has declined.

The purchase price of an American tire, if bought with French or English money, has increased.

The price of an American tire in Europe, therefore, has reached at the present moment a level that renders it incompetitive, while a French or English tire can be sold much cheaper in the United States than an equivalent American tire.

In the language of the economist; a point has been reached where the export of rubber products becomes unprofitable in our market, as its purchasing value for other goods has declined. But this adverse condition must pass very soon. French and English exchanges have declined not only in the direction of the United States. They have also shown a considerable decline in other directions. In these markets the purchasing value of French and English money is lower than that

of the dollar which has remained approximately at par. This development has already resulted in a purchasing movement in favor of the two countries for such merchandize as is manufactured exclusively inside England or France. But the lower exchange operates in this instance very heavily against the selling country, as it reduces materially the available funds for exchange purchases. The raw materials bought by either France or England in exchange for industrial products cost these two countries not the price of the normal exchange, but the additional cost caused by loss of exchange.

The Remedy

To meet this situation these countries will have to raise their prices to a point where it becomes profitable to them to sell their merchandise in exchange of the foreign product. This step has been taken already in many instances, as indicated by the rapid rise in the cost of many raw materials and manufactures which we import ourselves from the countries in question. The time has come, then, when the real test of comparative competitive ability applies. To what point will England have to raise its tire prices so as to meet the demands of labor, cost of materials, overhead, and essential manufacturing profit? Will this bring the cost of its tries to a level considerably higher than that at which the same tire can be supplied by the United States? The chances are that the weight of the heavy national overhead expenses of Europe and the enormous loss in purchasing power caused by the devaluation of its money will favor the United States producer.

This answers also the present problem. We cannot expect European exchange to rectify itself as rapidly as has been the case after other wars. The burden is too great to be borne easily. But a stabilization will be attempted that will remove the principal disadvantage of the present situation—that of the permanent changes in the market quotation of foreign moneys and the general disorganization of all international trading resulting from it. If we know the franc will buy 10 cents worth of our merchandise or of raw materials of other countries, we can sell and buy upon this basis. After a while all trading will readjust itself accordingly and competition will not depend upon the varying changes of the money situation but upon the ability to produce at a competitive price. There will be no handicap and no favor. Under such conditions the American rubber industry should be well able to greatly increase and prosper in its foreign dealings.

Straight-Side Tires for Foreign Markets

In developing an American tire export trade the matter of straight-side vs. clincher tires becomes an important factor that was intelligently discussed by D. B. Richardson, foreign sales manager of the Studebaker Corporation, before the Automobile Export Managers' Convention. Mr. Richardson said in part:

It is now a conceded fact that the mileage obtained from a straight-side tire is normally greater than that obtained from a clincher of equal size. This is because the absence of a bead permits a given weight of car to be carried on a larger volume of air or inside diameter than does a beaded or clincher tire of the same cross-section. It has played no small part in increasing tire guarantees from 3,500 to 5,000 and even 10,000 miles or more.

These facts are generally admitted in the United States and, subject to demonstration, abroad just as they were here in the beginning. The prejudice of foreign buyers disappears when they are convinced that a straight-side tire will give more mileage at a given cost than a clincher tire. Therefore the problem of popularizing straight-side tires in foreign markets hinges on two things—the attitude of competitors and the ability to get replacements.

It may be conceded as a fact that the continental European tire manufacturers will do everything they possibly can against the straight-side tires for the reason that they are better equipped to build clincher tires. The European car manufacturer will also combat the straight-side tire because it is an American development, and he will find the European tire manufacturer helping him on every hand. There will also be the European tire dealer to aid them, so that the elimination of the clincher tire will not be accomplished without a great deal of propaganda work and can never be accomplished without united action upon the part of the American car and tire manufacturers.

Whether or not this can ultimately be brought about, depends upon one thing only—the ability of the purchaser of an American car equipped with straight-side tires to get replacements wherever he may go with his car. This means practically universal distribution of straight-side tires, and is a problem which belongs primarily to the tire manufacturer, although looking at the question in its broadest sense, it is one of mutual interest to him and the automobile manufacturer.

The equipping of American cars for export with American clincher tires does not solve the problem, for these are inch-size tires and not interchangeable on the same rim with European milimeter-size

tires, with the exception of 34 by 4½ and 880 by 120 m.m., the former, however, being made only with straight sides. Moreover, it is as difficult in most foreign markets to obtain an inch-size clincher as an inch-size straight-side tire. That the problem is susceptible of solution, however, was recently indicated in Argentina, where a change from 100 per cent clincher tire equipment, metric sizes, to 100 per cent straight-side equipment, inch sizes, was made without the loss of a single sale. This was brought about through co-operation with tire manufacturers who were notified in advance so that when the cars arrived there was already a stock of inch-size, straight-side tires to be had.

METRIC SIZES AND THEIR EQUIVALENTS

Metric Sizes. Milimeters.	Approximate Size in Inches.	Metric Sizes. Milimeters.	Approximate Size in Inches.
550 x 65	22 x 2½	910 x 100	36 x 4
650 x 65	26 x 2½	765 x 105	30 x 4
700 x 65	28 x 2½	815 x 105	32 x 4
750 x 65	30 x 2½	875 x 105	34 x 4
800 x 65	32 x 2½	915 x 105	36 x 4
830 x 65	33 x 2½	760 x 120	30 x 4½-5
860 x 65	34 x 2½	815 x 120	32 x 4½-5
700 x 80	28 x 3	820 x 120	32 x 4½-5
750 x 80	30 x 3	850 x 120	33 x 4½-5
800 x 80	32 x 3	875 x 120	34 x 4½-5
700 x 85	28 x 3¼	880 x 120	34 x 4½-5
750 x 85	30 x 3¼	920 x 120	36 x 4½-5
800 x 85	32 x 3¼	1020 x 120	40 x 4½-5
860 x 85	34 x 3¼	1080 x 120	42 x 4½-5
710 x 90	28 x 3½	820 x 135	32 x 5-5½
760 x 90	30 x 3½	835 x 135	33 x 5-5½
810 x 90	32 x 3½	880 x 135	34 x 5-5½
840 x 90	32 x 3½	895 x 135	34 x 5½
870 x 90	34 x 3½	920 x 135	36 x 5-5½
910 x 90	36 x 3½	935 x 135	36 x 5½
960 x 90	38 x 3½	895 x 150	35 x 6
1010 x 90	40 x 3½	920 x 150	36 x 6
760 x 100	30 x 4	935 x 150	37 x 6
810 x 100	32 x 4	1000 x 150	40 x 6
870 x 100	34 x 4	1050 x 150	42 x 6

From "the Tire Rate Book."

The same result can be obtained in all markets, with the possible exception of Continental Europe, through the co-operation of American tire and automobile manufacturers, as evidenced by distribution which the more aggressive tire manufacturers have already effected throughout the world.

In Continental Europe it is doubtful if this change can be brought about for some time, because the local manufacturers are at home and we are meeting them on their own ground, where they have every patriotic and local element supporting them, but it could doubt-

less be done even there through united team work of all American manufacturers of cars and tires. The straight-side tire is a better proposition for the ultimate purchaser, and if we can give him the same replacement service that is afforded with the clincher tires, we have helped him and thus have helped ourselves.

So long as some of our American manufacturers equip with clincher tire equipment, so long must all equip with clincher tire equipment. Not one of us would be willing to sacrifice his individual market and see some other American manufacturer take it, because this would not bring about the desired result. Team work and the united effort of the American manufacturers can accomplish this result while the efforts of one alone would be unavailing.

Foreign Import Duties on Rubber Tires

The following table, corrected to April 16, 1921, by the Bureau of Foreign and Domestic Commerce, shows the foreign import duties on rubber tires of all descriptions imported into the various countries from the United States.

The column marked "Weight" shows whether duties are levied on net or gross weight, or include simply the inner packings. The next two columns give the rate of the duty for each one hundred pounds in United States currency or the rate per cent ad valorem. The surtaxes have been included and the converted rates therefore indicate the actual duty payable.

Certain charges, such as warehousing, customs handling, local taxes, revenue stamps, etc., are not included. The rates of duty shown, including the surtaxes as noted, should therefore be regarded as the minima. As changes in duties are likely to occur at any time, frequent verification of these figures is advised.

Countries	Weight	Rate per 100 Pounds, U. S. Currency	Rate Per Cent Ad Valorem
North America			
Canada	.....	.....	35
(Ad valorem duties are based on the fair market value of the articles when sold for home consumption in the country whence exported direct to Canada.)			
Central American States—			
British Honduras	.....	.....	15
(Duties based on price in the port of export.)			
*Costa Rica	Gross	$4.22	.....
Guatemala	Gross	90.76	.....

*Imports for provinces of Limón, plus 5 per cent of duty. Imports for interior provinces, plus 2 per cent of duty.

Countries	Weight	Rate per 100 Pounds, U. S. Currency	Rate Per Cent Ad Valorem
Honduras—Motorcycle tires	Gross	12.48	.....
Automobile tires	Gross	4.99	.....
(Imports into Amalpa—surtax of 14 cents per quintal of 101.4 pounds.)			
Nicaragua—Auto tires, inner tubes, solid tires, motorcycle tires, etc.	Net	30.62	.....
(Includes surtax of 12½ per cent of duty.)			
Panama	.....	.....	15
Salvador	Gross	13.81	.....
(A surtax of 1½ per cent of the duty is included.)			
Hawaii	.....	.....	Free
(Imports from foreign countries are subject to the provisions of the United States tariff.)			
Mexico—Auto tires	.....	24.85	.....
Truck tires	.....	12.43	.....
(A surtax of 10 per cent of the duty is included.)			
Newfoundland	.....	.....	49.5
(A surtax of 10 per cent of the duty is included.)			
West Indies—			
British—			
†Antigua	.....	.....	13.33
Bahamas	.....	.....	12.5
†Barbados	.....	.....	11.25
‡Bermuda	.....	.....	.....
†Dominica	.....	.....	12.5
†Grenada	.....	.....	15
Jamaica	.....	.....	16.66
†Montserrat	.....	.....	13.33
†St. Christopher-Nevis	.....	.....	11
†St. Lucia	.....	.....	16.5
†St. Vincent	.....	.....	10
†Trinidad and Tobago	.....	.....	15
Turks and Caicos Islands	.....	.....	10
Virgin Islands	.....	.....	10
Cuba	.....	.....	25
Dominican Republic—Tires for autos, bicycles, etc., ...	Net	5.67	.....
Tires for trucks..	.....	Free	.....
French—			
Guadeloupe	.....	.....	6
Martinique (rates not specified)	.....	.....	.....
(Imports of other than French origin pay also the regular French import duties.)			
Haiti	.....	.....	24
Porto Rico	.....	.....	Free
(Imports from foreign countries are subject to the provisions of the United States tariff.)			
Virgin Islands of the United States	.....	.....	Free
(Imports from foreign countries are temporarily subject to the duties formerly in force in the Danish West Indies.)			

†When imported from the United Kingdom, Canada or Newfoundland, admitted at a reduction of one-fifth of the duty. The cost of packing is excluded, except in Dominica, St. Lucia and Grenada, where it is included.

‡Automobiles and motorcycles prohibited.

Countries	Weight	Rate per 100 Pounds, U. S. Currency	Rate Per Cent Ad Valorem
South America:			
Argentina—Rubber casings	Legal	.....	32
Tubes			
Solid Tires			
(Valuation $105.06 per 100 pounds.)			
Non-skid casings	Legal	.....	32
(Valuation $78.79 per 100 pounds.)			
Pneumatic tires and tubes for cycles and motorcycles	Legal	.....	32
(Valuation $120.84 per 100 pounds.)			
(Rate per cent includes surtax of 7 per cent ad valorem.)			
Bolivia—Solid tires	Legal	17.64	.....
Pneumatic tires	Legal	52.93	.....
Brazil—Auto tires	.....	.....	46.28
Pneumatic tires of Pará rubber	.....	.....	20.57
(Duties given are actual ad valorem duties. Nominal ad valorem duties are 15 and 5 per cent respectively.)			
Chile	Gross	0.91	.....
Colombia	Gross	9.93	.....
Ecuador	Net	9.93	.....
Guiana—British	.....	.....	20
(When imported from the United Kingdom, Canada or Newfoundland. admitted at a reduction of one-fifth of the duty.)			
Dutch	.....	.....	11
French	.....	.....	5
(The regular French import duties are also collected on goods not of French origin.)			
Paraguay—Casings, tubes, solid tires	.....	.....	43.5
(Valuation, $140.07 per 100 pounds.)			
Non-skid attachments	.....	.....	43.5
(Valuation, $105.05 per 100 pounds. Includes surtax of 1.5 per cent ad valorem.)			
Peru—Articles of soft rubber, not specified	Legal	35.32	.....
Articles of hard rubber not specified	Legal	52.98	.....
(At Callao, Salaverry, Mollendo, Ilo, Paita and Pisco a surtax of 20 per cent of duty is levied; at other ports, 18 per cent.)			
Uruguay	.....	.....	45
Venezuela	Gross	6.57	.....
Europe:			
Austria-Hungary	Net	13.81‡	.....
Belgium—Solid tires	Net	11.38	.....
Casings for autos and motorcycles	Net	20.31	.....
Casings for other vehicles, weighing each:			
Under 600 grams	Net	15.76	.....
600 grams or more	Net	10.51	.....
Inner tubes for:			
Autos and motorcycles	Net	29.77	.....
Other vehicles	Net	26.26	.....
Bulgaria—Tires and tubes	Net	5.25	.....
Czecho-Slovakia—Pneumatic tires and tubes	.....	13.13	.....

Countries	Weight	Rate per 100 Pounds, U. S. Currency	Rate Per Cent Ad Valorem
Denmark—Auto tires	Net	6.08	.....
Solid tires	Net	.....	Free
Combined with textiles	Net	1.94	.....
Faroe Islands	.....	.....	Free
Finland—All tires, without rims	Net	52.12	.....
With rims	Net	31.51	.....
France—Auto tires and tubes	Net	17.08	.....
Solid tires	Net	11.38	.....
Cycle tires	Net	37.55	.....
Germany—Auto tires	Net	6.48	.....
Inner tubes	Net	6.48	.....
Gibraltar	.....	.....	Free
Greece	Net	1.03	.....
Iceland	Net	0.24	.....
Italy—Auto tires and tubes	Net	5.25	.....
Jugo-Slavia	.....	10.51	.....
(These duties to be increased 100 per cent. There is a 10 per cent surtax on luxuries.)			
Malta	.....	.....	15
Netherlands	.....	.....	5
Norway—Auto tires	Net	3.65	.....
Motorcycle tires	Net	3.65	.....
Poland	Legal	10.79	.....
Portugal	Net	1.60	.....
(Conversion to U. S. currency is based on the latest quotation of the paper milreis.)			
Roumania—Auto tires	Legal	8.75	.....
Solid tires	Legal	4.38	.....
Servia	Net	13.16	.....
Spain—Solid tires	Net	17.51	.....
Casings and inner tubes	Net	70.91	.....
Sweden—Solid tires	Net	9.73	.....
Tires for motorcycles	Net	19.45	.....
Auto tires, tubes, casings	Net	14.59	.....
Switzerland—Solid tires	Gross	0.09	.....
Pneumatic tires, tubes, casings	Gross	0.44	.....
Solid tires with fabric or metal	Gross	0.44	.....
Pneumatic tires, tubes, casings, with valves, etc.	Gross	0.70	.....
Non-skid tires with leather or steel protectors	Gross	2.20	.....
Turkey	.....	11.00	.....
United Kingdom	.....	.....	Free
Asia:			
British—			
Aden	.....	.....	Free
Ceylon	.....	.....	7.5
(Duty based on wholesale cash price in bond, less trade discount at the port of entry.)			
Cyprus	.....	.....	8
(Duty based on export price with addition of cost of transport [including insurance] to the port of final discharge.)			
Federated Malay States	.....	.....	10

Countries	Weight	Rate per 100 Pounds, U. S. Currency	Rate Per Cent Ad Valorem
Hongkong	.....	.....	Free
India	.....	.....	20
(See note for Ceylon.)			
North Borneo	.....	.....	10
Sarawak	.....	.....	Free
Straits Settlements	.....	.....	Free
China	.....	.....	5
Dutch East Indies	.....	.....	10
French Indo-China	.....	.....	.....
(Imports from France are admitted free of duty, while imports from other countries are subject to the rates prescribed by the customs tariff of France.)			
Japan (including Formosa and Chosen)—			
Auto Tires	.....	.....	25
Cycle Tires	Net	42.92	.....
Persia	.....	.....	12
Siam	.....	.....	3
Syria	.....	.....	11%+ 1% if imported through Egypt.
Africa:			
Abyssinia	.....	.....	10
Belgian Congo	.....	.....	10
British—			
Mauritius	.....	.....	12
Nigeria	.....	.....	Free
Union of South Africa	.....	.....	20
(Duty based on the current value for home consumption at the place of purchase including value of packing and agent's commission if it exceeds 5 per cent.)			
Zanzibar	.....	.....	7.5
(The dutiable value of imports from Europe or America is taken to be the cost price [with charges], increased by 5 per cent or the invoice price [exclusive of charges] increased by 15 per cent.)			
Egypt	.....	.....	8
(In Alexandria a wharfage tax of one-half of 1 per cent is added. At other ports different rates are imposed.)			
French Algeria	.....	.....	.....
(Imports from France are admitted free of duty, while imports from other countries are subject to the rates prescribed by the customs tariff of France.)			
Italian—			
Eritrea	.....	.....	8
Libia	.....	.....	11
Somaliland	.....	.....	15
Liberia	.....	.....	12.5
Morocco	.....	.....	12.5
Oceania:			
British—			
Australia	.....	.....	40
(Duty based on fair market value F. O. B. at port of export, plus 10 per cent. On casings weighing over 2½ pounds and inner tubes over 1 pound each, 48.6 cents per pound, if higher than the ad valorem rate.)			
New Zealand	.....	.....	1
Guam	.....	.....	Free
(Imports of foreign origin are taxed 25 per cent of their value.)			

Countries	Weight	Rate per 100 Pounds, U. S. Currency	Rate Per Cent Ad Valorem
Philippine Islands	.....	.....	Free
(Imports of foreign origin are taxed 25 per cent of their value.)			
Tutuila	.....	.....	10

Conversion made at normal rate of exchange except where otherwise stated. Legal weight is not uniformly construed, but generally includes the weight of the immediate packing or container, though in some countries fixed tare allowances are made.

Truck Trailers

An important factor that may materially increase tire production in the near future is the increasing use of trailers. More than half a billion dollars a year is being spent unnecessarily in the United States for road haulage by motor truck. Some 600,000 trucks throughout the country are rendering an annual service of about 7,950,000,000 ton miles at a cost not far from $1,828,500,000. This is based on an average operating cost of 23 cents per ton mile.

Tables of operating costs of trailers and semi-trailers show the cost to vary from about three and one-half cents to six and one-half cents per ton-mile, according to type and size of trailer. This indicates five cents as an average, but to be conservative, an average of ten cents per ton-mile is taken as the basic cost of haulage with trailers and semi-trailers.

If every motor truck were to draw one trailer or semi-trailer of the same load capacity as the truck, half the total tonnage would be carried on the trailers at a saving of 13 cents per ton mile or a total of $516,750,000 annually in the nation's motor haulage bill. This is the solution if the cost of motor haulage at distances greater than fifty miles is to be reduced materially and put on a competitive basis.

Incidentally 600,000 trailers would call for 1,200,000 to 2,400,000 tires for original equipment and from 300,000 to 600,000 spare tires besides.

The use of motor-truck trailers has been limited to light loads and fairly level roads, due to the impossibility of controlling heavily loaded trailers with ordinary brakes. With the application of specially designed air-brake equipment this difficulty disappears and the motor truck and trailer become successful factors in the transportation of interurban freight. This opens a new field of business for the manufacturers of air-brake hose and one that presents an assured future.

A two-ton truck and a five-ton trailer with a seven-ton load afforded an exceptional test in a recent trial run where 250 miles of moun-

tains were encountered with grades as stiff as 19 per cent. and four miles long. The fact that the train was held under control under all conditions without damaging the brake linings, speaks well for the brake equipment. For exceptionally severe service, as in construction work, the use of armored hose is contemplated.

With this equipment the use of pneumatic tires is more appealing to the truck owner, as there is always a reliable means of inflation at

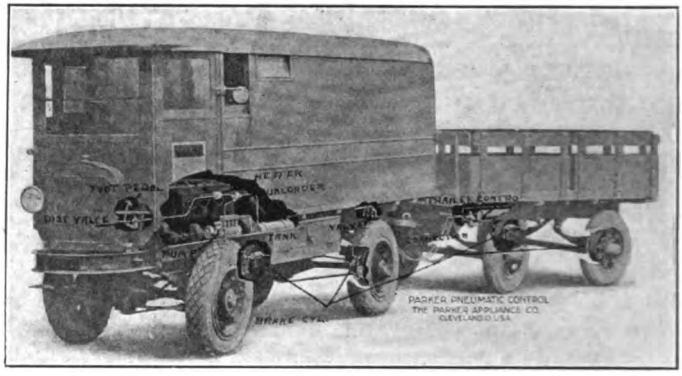

TRUCK AND TRAILER EQUIPPED WITH AIR-BRAKES

hand, and as the pneumatic tire gains prestige in the trucking field, air brakes should be the standard equipment on all trucks whether a trailer is to be used or not.

BUS LINES REPLACING TROLLEYS

Another factor that may affect tire production is the prospect that many trolley lines will in the near future be discontinued in favor of rubber tired motor buses running on regular routes and schedule time the same as the street railways of today. Semi-hard rubber tires have even been suggested for the present type of street cars running on rails. It has been contended that a properly designed tire for this purpose would exceed the life of tires on motor buses and trucks, on which a service of 20,000 miles and over is common; that the wear and tear on the rails would be reduced; that the cost of maintenance would be largely eliminated, and the corrugation problem would be solved. The question of doing away with noise and vibration is a strong argument in favor of rubber tires, and it would permit a higher rate of speed without discomfort to those who ride or annoyance to those living along the route.

In view of the rapid growth of this great industry and its assured future it is not surprising that stocks in tire companies are now numbered among the conservative and most sought investments, nor that the earnings from stocks in some of the pioneer companies have been enormous. The records show that $100 originally invested in Goodrich stock has returned over $8,000; in Fisk over $12,000; in Goodyear over $25,000; in Dunlop over $50,000 and in Firestone over $59,000.

Tire Prices

The course of the prices of rubber goods during the war period has been fully reviewed by Isador Lubin in press bulletin No. 30 of the War Industries Board entitled "Prices of Rubber and Rubber Products." That portion devoted to tires, follows, together with a diagram showing the relative prices of tires and a table of actual wholesale prices.

This type of rubber goods has been divided into 3 groups: (1) automobile pneumatic tires, (2) solid tires, and (3) automobile pneumatic tubes. Since approximately 50 per cent of the automobiles in the United States in 1917 were Fords, it is reasonable to conclude that about one-half of the pneumatic tires manufactured in that year were of the size used on such cars. Therefore 30 by 3½ inch tires, together with the 33 by 4 inch size, which is another variety commonly used, were selected as the types for which prices are quoted. Corresponding sizes were taken as most representative for automobile tubes.

As regards solid tires, which have played an ever-increasing part in the rubber industry, the 36 by 5 inch type which was used in considerable quantities by the United States Motor Transport Corps was selected as representative.

The general low-price level of rubber goods in early 1915 was characteristic of every product of the industry. In the case of tires, however, the price fall was most marked, a 27 per cent decrease taking place within the first quarter of the year. This may be accounted for by (1) the abnormally low prices of cotton fabrics—the aftermath of the shutting off of cotton exportations—and (2) the obnormal competition in the rubber industry, the results of which were at that time making themselves felt. This competition was the culmination of the situation in the three preceding years. In 1912, when prices were highest, there was talk in the trade of the prodigious profits of the tire manufacturers. This talk naturally resulted in a rush to make tires, and soon capacity of production outran capacity of consumption. An inevitable scaling of prices followed, and pneumatic tires continued

downward until the low point was reached in early 1915. The low price of February continued until December, when the price started on an upward course, which reached its summit in April, 1918. This rise was, of course, due to the increasing cost of labor and materials other than rubber. In no case, however, was the rise proportionate to either of these factors.

Solid rubber tires are a relatively new product of the rubber industry. In 1913 and 1914 they were relatively little in demand and

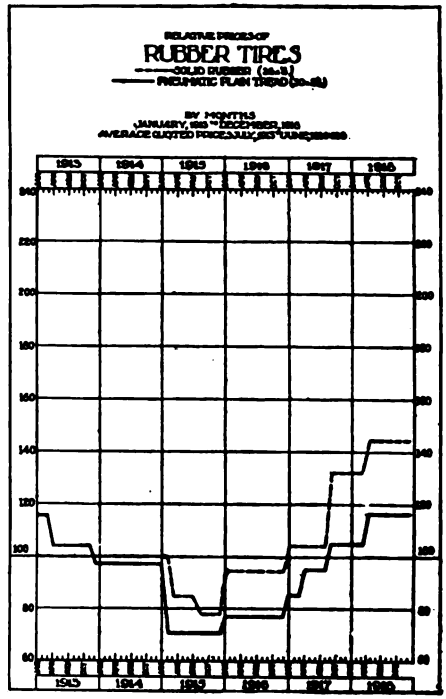

FIGURE 3. RELATIVE PRICES OF RUBBER TIRES: SOLID RUBBER (36 BY 5); PNEUMATIC PLAIN TREAD (30 BY 3½).—BY MONTHS, JANUARY, 1913, TO DECEMBER, 1918. (AVERAGE QUOTED PRICES, JULY, 1913, TO JUNE, 1914=100.)

it was not until the motorization of the Allied transport system after the outbreak of the European War that they became a factor of large importance. Solid-tire prices continued unchanged through 1913 and 1914, falling early in 1915 in sympathy with all other rubber goods. In late 1915 the war demand for solid tires made itself felt. This demand tended to reinforce the rise of tire prices in general, and January, 1916, witnessed an increase of 16 per cent, as contrasted with a seven per cent rise in the price of pneumatics.

In 1917 and 1918 solid-tire prices rose quite regularly with those of pneumatics. The tremendous demand resulting from Army needs accentuated the rise in the price of the former, however, and 1918 ended with solid-tire prices 45 per cent above their pre-war average, as contrasted with pneumatics, whose prices had risen but 16 per cent above the 1913-1914 level.

The signing of the armistice found the price level of the rubber industry as a whole 72 per cent below that of all commodities, or in other words, 31 per cent above its own level of 1913-1914.

WHOLESALE PRICES OF RUBBER TIRES AND TUBES

	Rubber tires and tubes.				
	Pneumatic plain tread, 30x3½ in.	Pneumatic non-skid, 30x3½ in.	Pneumatic non-skid, 33x4 in.	Pneumatic tubes, 33x4 in.	Solid rubber tire, 36x5 in.
Market	Akron, O.	Akron, O.	Akron, O.	Akron, O.	Akron, O.
Unit	Single tire.	Single tire.	Single tire.	Single tube.	Single tire.
**Base price	**$13.0900**	**$16.0700**	**$23.7200**	**$3.8260**	**$39.2700**

	Rubber tires and tubes.				
	Pneumatic plain tread, 30x3½ in.	Pneumatic non-skid, 30x3½ in.	Pneumatic non-skid, 33x4 in.	Pneumatic tubes, 33x4 in.	Solid rubber tire, 36x5 in.
Market	Akron, O.	Akron, O.	Akron, O.	Akron, O.	Akron, O.
Unit	Single tire.	Single tire.	Single tire.	Single tube.	Single tire.
**Base price	**$13.0900**	**$16.0700**	**$23.7200**	**$3.8260**	**$39.2700**

	Rubber tires and tubes.				
	Pneumatic plain tread, 30x3½ in.	Pneumatic non-skid, 30x3½ in.	Pneumatic non-skid, 33x4 in.	Pneumatic tubes, 33x4 in.	Solid rubber tire, 36x5 in.
Market	Akron, O.	Akron, O.	Akron, O.	Akron, O.	Akron, O.
Unit	Single tire.	Single tire.	Single tire.	Single tube.	Single tire.
**Base price	**$13.0900**	**$16.0700**	**$23.7200**	**$3.8260**	**$39.2700**

	Rubber tires and tubes.				
	Pneumatic plain tread, 30x3½ in.	Pneumatic non-skid, 30x3½ in.	Pneumatic non-skid, 33x4 in.	Pneumatic tubes, 33x4 in.	Solid rubber tire, 36x5 in.
Market	Akron, O.	Akron, O.	Akron, O.	Akron, O.	Akron, O.
Unit	Single tire.	Single tire.	Single tire.	Single tube.	Single tire.
**Base price	**$13.0900**	**$16.0700**	**$23.7200**	**$3.8260**	**$39.2700**
1913—Year	13.9036	17.4001	25.6838	4.1425	39.2700
Quarters—					
First	15.1000	18.9647	27.9930	4.5150	39.2700
Second	13.6000	17.0683	25.1940	4.0638	39.2700
Third	13.6000	17.0683	25.1940	4.0638	39.2700
Fourth	13.3145	16.4793	24.3545	3.9283	39.2700
Months—					
January	15.1000	18.9647	27.9930	4.5150	39.2700
February	15.1000	18.9647	27.9930	4.5150	39.2700
March	15.1000	18.9647	27.9930	4.5150	39.2700
April	13.6000	17.0683	25.1940	4.0638	39.2700
May	13.6000	17.0683	25.1940	4.0638	39.2700
June	13.6000	17.0683	25.1940	4.0638	39.2700

July	13.6000	17.0683	25.1940	4.0638	39.2700
August	13.6000	17.0683	25.1940	4.0638	39.2700
September ...	13.6000	17.0683	25.1940	4.0638	39.2700
October	13.6000	17.0683	25.1940	4.0638	39.2700
November ...	13.6000	17.0683	25.1940	4.0638	39.2700
December	12.7435	15.3615	22.6765	3.6575	39.2700
1914—Year	12.7435	15.3615	22.6765	3.6575	39.2700
Quarters—					
First	12.7435	15.3615	22.6765	3.6575	39.2700
Second	12.7435	15.3615	22.6765	3.6575	39.2700
Third	12.7435	15.3615	22.6765	3.6575	39.2700
Fourth	12.7435	15.3615	22.6765	3.6575	39.2700
Months—					
January	12.7435	15.3615	22.6765	3.6575	39.2700
February	12.7435	15.3615	22.6765	3.6575	39.2700
March	12.7435	15.3615	22.6765	3.6575	39.2700
April	12.7435	15.3615	22.6765	3.6575	39.2700
May	12.7435	15.3615	22.6765	3.6575	39.2700
June	12.7435	15.3615	22.6765	3.6575	39.2700
July	12.7435	15.3615	22.6765	3.6575	39.2700
August	12.7435	15.3615	22.6765	3.6575	39.2700
September ...	12.7435	15.3615	22.6765	3.6575	39.2700
October	12.7435	15.3615	22.6765	3.6575	39.2700
November	12.7435	15.3615	22.6765	3.6575	39.2700
December	12.7435	15.3615	22.6765	3.6575	39.2700
1915—Year	9.4614	10.7126	17.3474	2.9869	36.4300
Quarters—					
First	10.3565	12.3138	18.8008	3.1698	37.2038
Second	9.1630	10.2900	16.8630	2.9260	33.0715
Third	9.1630	10.2900	16.8630	2.9200	31.5571
Fourth	9.1630	10.2900	16.8630	2.9260	30.8000
Months—					
January	12.7435	15.3615	22.6765	3.6575	39.2700
February	9.1630	10.2900	16.8630	2.9260	39.2700
March	9.1630	10.2900	16.8630	2.9260	33.0715
April	9.1630	10.2900	16.8630	2.9260	33.0715
May	9.1630	10.2900	16.8630	2.9260	33.0715
June	9.1630	10.2900	16.8630	2.9260	33.0715
July	9.1630	10.2900	16.8630	2.9260	33.0715
August	9.1630	10.2900	16.8630	2.9260	30.8000
September	9.1630	10.2900	16.8630	2.9260	30.8000
October	9.1630	10.2900	16.8630	2.9260	30.8000
November	9.1630	10.2900	16.8630	2.9260	30.8000
December	9.1630	10.2900	16.8630	2.9260	30.8000
1916—Year	10.0870	11.3100	18.5570	3.2340	37.2680
Quarters—					
First	10.0870	11.3100	18.5570	3.2340	37.2680
Second	10.0870	11.3100	18.5570	3.2340	37.2680
Third	10.0870	11.3100	18.5570	3.2340	37.2680
Fourth	10.0870	11.3100	18.5570	3.2340	37.2680
Months—					
January	10.0870	11.3100	18.5570	3.2340	37.2680
February	10.0870	11.3100	18.5570	3.2340	37.2680
March	10.0870	11.3100	18.5570	3.2340	37.2680
April	10.0870	11.3100	18.5570	3.2340	37.2680
May	10.0870	11.3100	18.5570	3.2340	37.2680
June	10.0870	11.3100	18.5570	3.2340	37.2680

July	10.0870	11.3100	18.5570	3.2340	37.2680
August	10.0870	11.3100	18.5570	3.2340	37.2680
September	10.0870	11.3100	18.5570	3.2340	37.2680
October	10.0870	11.3100	18.5570	3.2340	37.2680
November	10.0870	11.3100	18.5570	3.2340	37.2680
December	10.0870	11.3100	18.5570	3.2340	37.2680
1917—Year	12.5895	13.9888	23.9726	3.8018	44.6333
Quarters—					
First	11.1265	12.6300	21.5600	3.5420	41.0025
Second	12.5125	13.5266	23.7160	3.8885	41.0025
Third	12.9360	13.8993	24.5116	3.8885	44.6343
Fourth	13.7830	15.3615	26.1030	3.8885	51.8980
Months—					
January	11.1265	12.6300	21.5600	3.5420	41.0025
February	11.1265	12.6300	21.5600	3.5420	41.0025
March	11.1265	12.6300	21.5600	3.5420	41.0025
April	12.5125	12.6300	23.7160	3.8885	41.0025
May	12.5125	13.9750	23.7160	3.8885	41.0025
June	12.5125	13.9750	23.7160	3.8885	41.0025
July	12.5125	13.9750	23.7160	3.8885	41.0025
August	12.5125	13.9750	23.7160	3.8885	41.0025
September	13.7830	15.3615	26.1030	3.8885	51.8980
October	13.7830	15.3615	26.1030	3.8885	51.8980
November ...	13.7830	15.3615	26.1030	3.8885	51.8980
December	13.7830	15.3615	26.1030	3.8885	51.8980
1918—Year	14.8514	17.1229	28.7210	4.1605	55.8525
Quarters—					
First	13.7830	15.3615	26.1030	3.8885	51.8930
Second	15.2075	17.7100	28.7210	4.2735	57.1725
Third	15.2075	17.7100	30.0300	4.2735	57.1725
Fourth	15.2075	17.7100	30.0300	4.2735	57.1725
Months—					
January	13.7830	15.3615	26.1030	3.8885	51.8980
February	13.7830	15.3615	26.1030	3.8885	51.8980
March	13.7830	15.3615	26.1030	3.8885	51.8980
April	15.2075	17.7100	26.1030	4.2735	57.1725
May	15.2075	17.7100	30.0300	4.2735	57.1725
June	15.2075	17.7100	30.0300	4.2735	57.1725
July	15.2075	17.7100	30.0300	4.2735	57.1725
August	15.2075	17.7100	30.0300	4.2735	57.1725
September ...	15.2075	17.7100	30.0300	4.2735	57.1725
October	15.2075	17.7100	30.0300	4.2735	57.1725
November ...	15.2075	17.7100	30.0300	4.2735	57.1725
December ...	15.2075	17.7100	30.0300	4.2735	57.1725

In March 1920 there was a general advance in tire prices averaging 15 to 20 per cent, owing to increased labor and raw material costs, and dealers stocked up heavily in advance. Sales fell off greatly during the summer, however, due partly to the wave of economy and retrenchment which had swept the country and the resulting general depression in the motor trades; partly to the declining raw material market, and partly to the fact that cord tires are giving a surprisingly long mileage.

In November of that year, as their contribution toward the price adjustments being made in most industries throughout the country, in order to stabilize and restore normal living conditions, leading American tire companies put prices back where they were before the general advance. It had been no secret for some time that the process of liquidating inventories had proved slow and that cancellations of orders and a decline of new business had found some manufacturers with rather heavy stocks on hand. Evidence of this condition had been seen in the gradual increase of unemployment in all rubber centers attendant upon the curtailment of operations by tire companies.

Instead of attempting to maintain a high level of prices until the high cost tires on hand were moved, tire manufacturers met the general decline in the raw material market with a reduction in prices to stimulate trade, thus giving consumers the benefit of the reduction during the autumn riding season when many replacements are usually required and preparations are made for winter driving.

Since the spring advance, crude rubber and cotton fabric, the two principal commodities entering into tire manufacture, dropped off sharply in price, and became important factors in the price reductions announced.

In May 1921 tire manufacturers throughout the country, led by the wholly unexpected action of The B. F. Goodrich Co., of Akron, Ohio, again readjusted their price schedules as a stimulant to larger retail sales, better stocking by dealers and increased production. The reductions averaged 10 to 12½ per cent on cord tires; 15 to 17½ per cent on fabric tires, and 20 per cent on inner tubes.

These revisions brought tire costs to the consumer down to or below the pre-war level as represented by the 1913 schedules. It practically means that a car owner may now buy five tires for the former price of four, or get his spare tire free of charge. Taking into consideration the fact that tires today give from 50 to 100 per cent greater mileage than they did eight years ago, the conclusion is obvious that, based on comparative service, they cost less than ever before.

Women In Tire Manufacture

One of the most interesting and significant developments of the times is the increased employment of women in tire manufacture. Female labor has long been extensively used in rubber footwear and mechanical goods factories, but until the World War was almost unknown in tire plants. With the call of thousands of men to the colors, the lighter jobs were undertaken by women, a large percentage

of whom will continue in the work, having demonstrated their capacity and efficiency. War brought about the change quickly, but improved methods, machinery and equipment made it possible. For example, with the aid of a lifting jack the physical effort required for the work in the finishing room has been reduced to such a degree that women are now employed on 3, 3½ and 4-inch tires.

The tires are brought into the department on trucks which are fitted with T-shaped steel uprights from which the tires are suspended. When the worker is ready to start on a new tire she approaches the loaded truck with a lifting jack. Upon turning a wheel at one side an arm is raised. This is guided under the nearest tire, lifting it off the T-shaped fixture on the truck. The lifting device, which is

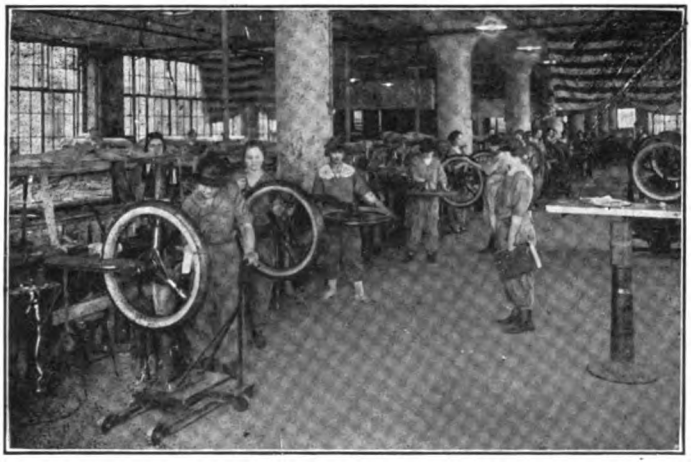

WOMEN FINISHING TIRES

mounted on casters, is then pushed to the worker's bench; the tire is lowered and transformed to the finishing bench. The plies of fabric and the gum strips are then applied by hand in the usual manner, rolled and the edges cut. The lifting jack is again used in removing the tire and placing it on a truck.

Women have successfully replaced men in supplying stock to the workers in the finishing room. The coils of wire for pneumatic tire beads are made and soldered by women, also wrapped and trimmed. Many women are employed in the pocket department where pieces of fabric are taken from books about eight feet long, cut to the required length and stretched, one layer above another, over a large drum of equal circumference until a certain thickness is attained.

These bands are then removed from the drum and conveyed to another department, where they are put over a tire core by men. As the books are too heavy for women to carry, men supply the workers as needed.

In other departments where women are employed the work is of lighter character. Women are engaged in cutting treads; in trimming the uneven fabric edges from the rubber tread; and in splicing the ends together; in making patches for repair kits; in making and valving inner tubes; in stamping sizes and names on inner tubes; and in the packing room where the product is boxed. Women also weigh rubber, separate sheets that have stuck together in transit, run rubber washers, and operate electric conveyor trucks. Numerous women are engaged as inspectors in various departments. As the finished casings are finally inspected they are sent to women who check their serial numbers and weigh each tire.

CHAPTER L

TIRE MACHINERY PATENTS

The United States

759,195 Vertical vulcanizing press. E. C. Shaw, assignor to The B. F. Goodrich Co., both of Akron, Ohio, May 3, 1904.

770,896 Mold for tires. Charles G. Fawkes, assignor to the Fawkes Rubber Co., both of Denver, Colorado, September 27, 1904.

779,379 Process of manufacturing rubbered cord for use in rubber articles. Thomas Sloper, Devizes, England.

781,687 Former or mold for making pneumatic tires or the like. Thomas Sloper, Devizes, England, assignor to Christian Hamilton Gray, Silvertown, Essex, England.

784,287 Machine for coating the strands of a thread and also the twisted thread. Eugene D. C. Bayne and Lawrence A. Subers, Cleveland, Ohio.

794,473 Machine for manufacturing pneumatic tires. Amedée Etienne Vincent, Noisy-le-Sec, France, July 11, 1905.

822,561 Apparatus for manufacturing wheel tires. Peter D. Thropp, Trenton, New Jersey. June 5, 1906.

834,908 Tool for detaching and resetting tires. P. L. Hussey, Cleveland, Ohio.

840,334 Process of making shoes for pneumatic tires. John W. Hyatt, Newark, New Jersey.

840,642 Machine for wrapping tires. Charles E. Miller, Anderson, Indiana. January 8, 1907.

846,408 Vulcanizing apparatus for tire repairs. H. H. Frost, assignor to Harvey Frost & Co., Limited, London, England.

847,041 Automobile tire-winding machine. Eugene D. C. Bayne and Lawrence A. Subers, Cleveland, Ohio.

852,113 Tire repair and protective device. C. G. Gilman, Oakland, California.

852,326 Apparatus for repairing pneumatic tires. F. L. Harley, Quakertown, Pennsylvania.

852,855 Machine for use in the manufacture of pneumatic tires. T. & R. Sloper, Devizes, England.

855,693 Apparatus for vulcanizing tires. J. C. Cole, Chicopee Falls, Massachusetts, assignor to the Fisk Rubber Co.

856,241 Portable self-contained tire vulcanizing apparatus. H. H. Frost, London, England.

857,495 Machine for filling fabric for tires. W. R. Smith, assignor of one-half to H. H. Hewitt, both of Buffalo, New York.

858,048 Apparatus for the manufacture of elastic tires. R. M. Whitman, Providence, Rhode Island.

858,406 Apparatus for vulcanizing rubber goods. Thomas Midgley, Hartford, Connecticut. July 2, 1907.

863,544 Machine for rolling tires. H. V. Loss, Philadelphia, assignor to C. L. Schoen, Noylan, Pennsylvania.

864,225 Tire mending implement. J. W. Blodgett, assignor to J. H. McElroy, trustee, both of Chicago, Illinois.

865,064 Collapsible core. Will C. State, assignor to the Goodyear Tire & Rubber Co., both of Akron, Ohio. September 3, 1907.

865,134 Rubber tire setter. H. L. Stoup, Ypsilanti, Michigan.

865,458 Mold for pneumatic tires. Frederick Veith, Veithwerk, near Höchst, Germany. September 10, 1907.

866,539 Repair device for pneumatic tires. P. C. Traver, assignor to M. P. McNamara, both of New York, N. Y.

868,732 Press for vulcanizing pneumatic tires. Amedée Etienne Vincent, Noisy-le-Sec, France. October 22, 1907.

871,973 Multipart mold for pneumatic tires. Frederick Veith. Veithwerk, near Höchst, Germany. November 26, 1907.

872,207 Tire channel cleaning device. W. C. Wegner, LaPorte, Indiana.

872,295 Tire setting machine for rubber tires. J. L. Hixson and C. W. Powell, Ypsilanti, Michigan.

880,587 Apparatus for manufacturing pneumatic tires. Thomas Sloper, Devizes, England.

881,651 Tire-wire pulling machine. J. A. Barbeake, Canton, Ohio.

896,989 Vulcanizer. J. F. Hardy, assignor to Consolidated Dental Manufacturing Co., both of New York, N. Y.

901,007 Method for vulcanizing casings of pneumatic tires. Ernest Hopkinson, East Orange, New Jersey, and Thomas Midgley, Hartford, Connecticut. Said Hopkinson, assignor to the Hartford Rubber Works Co., Hartford Connecticut, October 13, 1908.

906,256 Mold and mold equipment. Tod J. Mell, assignor to the Republic Rubber Co., both of Youngstown, Ohio. December 8, 1908.

906,588 Machine for manufacturing pneumatic tires. A. E. Vincent, Pittsburgh, Pennsylvania.

907,532 Portable vulcanizing apparatus. M. Schiele, Hanover, Germany, assignor to E. Berliner, Washington, D. C.

910,370 Process of making hollow rubber articles. Frederick J. Gleason, Walpole, Massachusetts, January 19, 1909.

911,182 Tire Mold. Peter D. Thropp, Trenton, New Jersey. February 2, 1909.

911,861 Mold. John K. Williams, assignor of one-half to the Williams Foundry & Machine Co., both of Akron, Ohio. February 9, 1909.

913,043 Rubber tire repairer. J. M. Padgett, Topeka, Kansas.

918,360 Machine for beveling air tubes for pneumatic tires. A. Olier, Clermont-Ferrand, France, assignor to Société A. Olier & Cie.

919,391 Apparatus for repairing pneumatic tires. W. J. Stark, Salt Lake City, Utah.

926,695 Vulcanizing apparatus for tire tubes or covers. W. P. S. Frost, London, England.

928,069 Repair device for tires. O. C. Reich, Denver, Colorado.

929,617 Rubber tire setter. C. A. Maynard, assignor to Maynard Rubber Corporation, Springfield, Massachusetts.

941,962 Pneumatic tire shoe manufacturing machine. W. C. State, assignor to F. A. Seiberling, both of Akron, Ohio.

943,054 Apparatus for manufacturing wheel tires. J. K. Williams, assignor of one-half to The Williams Foundry & Machine Co,. both of Akron, Ohio.

943,055 Vulcanizing mold. John K. Williams, assignor of one-half to the Williams Foundry & Machine Co., both of Akron, Ohio. December 14, 1909.

944,339 Vulcanizing Mold. Paul W. Litchfield, assignor to the Goodyear Tire & Rubber Co., both of Akron, Ohio. December 28, 1909.

948,064 Process of making tire shoes. Frank A. Seiberling and Will C. State, both of Akron, Ohio; said State assignor to said Seiberling. February 1, 1910.

949,154 Vulcanizer for repairing rubber tires, etc. V. H. Meyer, Cleveland, Ohio.

950,172 Tire repair device. J. C. Herman, Chicago, Illinois.

958,309 Tire wrapping and unwrapping machine. N. E. Roper, Akron, Ohio.

961,172 Mechanism for manufacturing pneumatic tires. T. Sloper, Devizes, England.

962,102 Compression apparatus for tire shoe wrappings. R. Rowley, New York, N. Y., and J. J. Coombec, Jersey City, New Jersey, assignors to the Rubber Co. of America.

966,302 Tire repair vulcanizing device. F. A. Blanchard, assignor of one-half to A. L. Blanchard, both of Norfolk Downs, Massachusetts.

973,061 Smoothing apparatus for the manufacture of pneumatic tires. A. Mathern, Berlin, Germany.

979,568 Tire-shoe wrapping and vulcanizing apparatus. Robert Rowley, New York, N. Y. December 27, 1910.

979,889 Tire shoe vulcanizing apparatus. R. Rowley, New York, N. Y.

981,981 Machine for forming automobile tire treads. William H. Crook, Ansonia, Connecticut, assignor to the Birmingham Iron Foundry, Derby, Connecticut, January 17, 1911.

983,354 Core for manufacturing pneumatic tire shoes. William S. Doll, Akron, Ohio. February 7, 1911.

983,785 Tire mold. J. W. Thropp, Trenton, New Jersey.

984,382 Tire setter. B. E. Martin, St. Mary's, West Virginia.

990,392 Tire-building machine. R. Rowley, New York, N. Y.

991,458 Tire-shoe building apparatus. R. Rowley, New York, N. Y., and J. J. Coomber, Jersey City, New Jersey.

995,732 Core for molding tires. Frederick S. Stiles and John Yemiker, assignors to the Faultless Machine & Manufacturing Co., all of Akron, Ohio. June 20, 1911.

998,413 Puncture-closing device for pneumatic tires. A. Smith, Stuart, Nebraska.

997,853 Vulcanizing device for rubber tires. W. C. Risbridger & M. W. Risbridger, assignors to W. Trosler & S. I. Rose, all of Cleveland, Ohio.

1,003,002 Tire-patching device. G. J. Martel, Chicago, Illinois.

1,003,003 Tire-patching device. G. J. Martel, Chicago, Illinois.

1,003,004 Tire-patching device. G. J. Martel, Chicago, Illinois.

1,003,496 Calender. André Olier, Clermont-Ferrand, Puy-de-Dome, France. September 19, 1911.

1,007,434 Apparatus for forming figured treads on tires. Louis Peter, Destribats, Newark, New Jersey.

1,009,765 Machine for manufacturing pneumatic tires. A. Mathern, Berlin, Germany.

1,011,155 Tire-splicing mandrel. C. C. Chamberlain, Ionia, Michigan.

1,011,450 Tire-wrapping machine. Albert DeLaski, Weehawken, and Peter D. Thropp, Trenton, assignors to the DeLaski & Thropp Circular Woven Tire Co., Trenton, all in New Jersey, December 12, 1911.

1,016,217 Tire setter. G. Troxler, Newark, New Jersey.

1,017,809 Puncture closer for pneumatic tires and the like. R. Sampson, Montreal, Quebec, Canada.

1,019,506 Vulcanizing mold. William A. McCool, Beaver Falls, Pennsylvania, assignor to the Hercules Tire & Rubber Co., Delaware.

1,022,289 Tire-vulcanizing repair apparatus. C. F. Adamson, E. Palestine, Ohio.

1,024,078 Tire-repair device. C. F. Jenkins, Washington, D. C.

1,026,975 Tire-setting machine. C. A. Devero Koekuk, Iowa, assignor to Koekuk Hydraulic Tire Setter Co.

1,029,307 Method of making pneumatic tire casings. Nelson W. McLeod, assignor to the American Tire Co., both of St. Louis, Missouri, June 11, 1912.

1,030,032 Tire repair device. F. A. Strong, Bridgeport, Connecticut, assignor to Weed Chain Tire Grip Co., New York, N. Y.

1,031,491 Tire-wrapping and unwrapping machine. Joseph W. Thropp, Trenton, New Jersey. July 2, 1912.

1,031,983 Core for manufacturing pneumatic tire shoes. Wilbur T. Childs, assignor of one-half to Frank Nolte and one-half to Martin D. Kuhlke, all of Akron, Ohio. July 9, 1912.

1,034,372 Apparatus for making pneumatic tires. C. H. Semple, Trenton, New Jersey.

1,035,749 Apparatus for making tires. Joseph Norman Satterthwaite, assignor to the Empire Tire Co., both of Trenton, New Jersey. August 13, 1912.

1,037,250 Process for making cores for manufacturing tire shoes. Robert M. Hinman, assignor of one-half to Frank Nolte, both of Akron, Ohio. September 3, 1912.

1,039,323 Apparatus for vulcanizing tires. P. Roussillon, Argenteuil, France, assignor to Société A. Olier & Cie., Clermont-Ferrand. France.

1,041,544 Apparatus for manufacturing rubber tires, etc. Emrys T. Williams, Akron, Ohio.

1,042,649 Tire making machine. L. D. Crosby, Hartford, Connecticut.

1,045,346 Tire making machine. T. J. Whalen. New Brunswick, New Jersey.

1,048,208 Device for repairing pneumatic tires. G. H. Raflovich, Boston, Massachusetts.

1,048,385 Puncture repairer. W. R. Barstow, Oakland, California.

1,049,090 Device for repairing pneumatic tire tubes. A. R. Hoeft, Chicago, Illinois.

1,051,490 Tool for repairing pneumatic tires, etc. T. C. Dobbins, Los Angeles, California.

1,053,404 Machine for preparing cores for re-use in manufacturing pneumatic tire shoes. F. L. Killian, assignor to F. R. Ormsby of Akron, Ohio.

1,057,439 Tire-patching device. G. J. Martel, Chicago, Illinois.

1,057,440 Tire-patching device. G. J. Martel, Chicago, Illinois.

1,057,911 Portable vulcanizing device for pneumatic tires. C. F. Adamson, Akron, Ohio.

1,058,316 Portable vulcanizer. C. E. Marshall, Indianapolis, Indiana.

1,060,262 Core for building pneumatic tires. Martin D. Kuhlke, Akron, Ohio, April 29, 1913.

1,061,339 Tire-shrinking machine. S. N. House, St. Louis, Missouri.

1,061,722 Device for shaping the outer casings of pneumatic tires. G. W. Bell, Stockport, England.

1,063,491 Collapsible core. John Yemiker and Frederick S. Stiles, assignors to the Faultless Machine & Manufacturing Co., all of Akron, Ohio. June 3, 1913.

1,063,838 Tire-patching tool. W. O. Shaw, St. Paul, Minn.

1,064,035 Tire-making machine. T. J. Whalen, New Brunswick, assignor to Harry M. Marble, Newark, both in New Jersey.

1,064,721 Vulcanizing press. John R. Gammeter, Akron, Ohio, assignor by mesne assignments to The B. F. Goodrich Co., New York, N. Y. June 17, 1913.

1,065,787 Repair device for pneumatic tires, etc. T. C. Dobbins, Los Angeles, California.

1,068,180 Tire-testing machine. K. W. Sonutag, St. Louis, Missouri.

1,068,653 Apparatus for repairing tires. W. A. Hinds, Hartford, Connecticut, assignor of one-half to S. H. Hoverton, and one-half to H. E. Eberly, Reading, Pennsylvania.

1,070,612 Solid tire remover and replacer. H. A. Covery, assignor to (one-half) F. C. Eberly—both of Akron, Ohio.

1,077,126 Friction calender for tire fabric. Henry J. Doughty, Edgwood, Rhode Island, October 28, 1913.

1,077,127 Process for forming a tire casing. Henry J. Doughty, Edgwood, Rhode Island, October 28, 1913.

1,079,601 Tire-wrapping machine. C. Kuentzel, assignor to the Goodyear Tire & Rubber Co., both of Akron, Ohio. November 25, 1913.

1,080,683 Tire shoe making machine. C. A. Edmonds, Akron, Ohio.

1,080,860 Device for building tires on rims. W. C. Stevens, assignor to The Firestone Tire & Rubber Co., both of Akron, Ohio.

1,084,895 Pneumatic tire casing repair device. M. Newsom, St. Louis, Missouri.

1,090,297 Rubber tire cutting machine. A. Greenwell, Owensboro, Kentucky.

1,091,040 Automobile inflator for pneumatic tires. R. Connell, Christ-Church, New Zealand.

1,094,325 Manufacture of reinforced inner tubes of pneumatic tires. F. H. Hall, Norton, Lindsey, England.

1,097,037 Core. George Lowell Mather, Akron, Ohio. May 19, 1914.

1,098,173 Tire-inflating apparatus. F. A. Ruff, Newark N. J.

1,099,112 Portable vulcanizer, J. S. Benson, Riverside, assignor to Positive Supply Co., Davenport, both in Iowa.

1,100,451 Tire bead making machine. William C. Stevens, assignor to the Firestone Tire & Rubber Co., both of Akron, Ohio. June 16, 1914.

1,101,555 Wrapping and unwrapping machine. C. Kuentzel, assignor to the Goodyear Tire & Rubber Co., both of Akron, Ohio.

1,101,732 Molding and vulcanizing machine. Henry J. Doughty, Edgwood, Rhode Island, assignor to the Doughty Tire Co., Portland, Maine. June 30, 1914.

1,102,017 Repair device for pneumatic tires, etc. T. C. Dobbins, Los Angeles, California, assignor to the Weed Chain Tire Grip Co., New York, N. Y.

1,104,789 Machine for inclosing cords in tire wrappers. E. W. Fothergill, assignor to Hartford Rubber Works Co.,—both of Hartford, Connecticut.

1,105,737 Collapsible core. J. K. Williams, assignor of one-half to Williams Foundry and Machine Co., both of Akron, Ohio.

1,106,506 Expansible collapsible tire core. L. Green-Wald, assignor to The Firestone Tire & Rubber Co., both of Akron,Ohio.

1,107,397 Collapsible core. J. Yemiker, Akron, Ohio.

1,107,398 Collapsible core. J. Yemiker, Akron, Ohio.

1,109,048 Tire-vulcanizing press. M. A. Dees, St. Louis, Missouri, September 1, 1914.

1,110,800 Machine for inserting wires in the rim engaging portion of solid tires. C. Kuentzel, assignor to The Goodyear Tire & Rubber Co., both of Akron, Ohio.

1,111,418 Wire spiral machine for tire treads. F. L. O. Wadsworth, Sewickley, Pennsylvania. September 22, 1914.

1,112,865 Portable buffer. William C. Stevens, assignor to the Firestone Tire & Rubber Co., both of Akron, Ohio, October 6, 1914.

1,113,447 Wrapping machine. Curt Kuentzel, assignor to the Goodyear Tire & Rubber Co., both of Akron, Ohio. October 13, 1914.

1,113,513 Machine for covering bead cores. William C. Tyler and Edward Nall, assignors to the Goodyear Tire & Rubber Co., all of Akron, Ohio. October 13, 1914.

1,113,912 Core for resilient wheel tires. F. V. Roesel & C. H. Franks, both of Akron, Ohio.

1,113,925 Pneumatic tire mold. G. E. Batchelor, Mount Vernon, New York.

1,114,234 Tire-vulcanizing mold. M. A. Dees and N. L. McLeod, assignors to American Tire Co., St. Louis, Missouri.

1,114,236 Tire-vulcanizing mold. Mark A. Dees and Nelson McLeod, assignors to the American Tire Co., all of St. Louis, Missouri. October 20, 1914.

1,114,280 Mold for pneumatic tires. N. W. McLeod, St. Louis, Missouri and M. A. Dees, Pascagoula, Mississippi, assignors to American Tire Company, St. Louis, Missouri.

1,114,732 Machine for making tire casings. F. B. Converse and F. A. Kress, both of Akron, Ohio, assignors to The B. F. Goodrich Co. New York, N. Y.

1,116,550 Core. George C. Biddle and Earl R. Buys, both of Akron, Ohio. November 10, 1914.

1,116,806 Tire-wrapping machine. J. W. H. Dow, London, England.

1,116,954 Machine for cutting strips from web material. Chester H. Thordarson, Chicago, Illinois. November 10, 1914.

1,117,803 Apparatus for forming pneumatic tires. Mark A. Dees, St. Louis, Mo., assignor of one-half to the American Tire Co., St. Louis, Missouri, and one-half to The B. F. Goodrich Co., New York, N. Y., November 17, 1914.

1,118,503 Apparatus for forming and vulcanizing rubber articles. Nelson W. McLeod, assignor to the American Tire Co., both of St. Louis, Missouri. November 24, 1914.

1,119,326 Machine for making or building up pneumatic tires. John E. Thropp and Peter D. Thropp, both of Trenton, New Jersey, and Albert DeLaski, Weehawken, New Jersey, assignors to the DeLaski & Thropp Circular Woven Tire Co., Trenton, New Jersey, December 1, 1914.

1,120,453 Apparatus for forming and vulcanizing rubberized fabric and rubber tires. M. A. Dees, St. Louis, Missouri. December 8, 1914.

1,120,520 Take-off reel. Edward Nall, assignor to the Goodyear Tire & Rubber Co., both of Akron, Ohio, December 8, 1914.

1,121,214 Hydraulic vulcanizer press. P. E. Welton, Akron, Ohio. December 15, 1914.

1,122,333 Method of making tires and apparatus therefor. James A. Swinehart, St. Louis, Missouri. December 29, 1914.

1,124,381 Collapsible core. Alexander Adamson, Akron, Ohio. January 12, 1915.

1,125,431 Collapsible core. Alexander Adamson, Akron, Ohio. January 19, 1915.

1,128,831 Vulcanizer press. A. Adamson, Akron, Ohio. February 16, 1915.

1,131,146 Slitter and rewinder. Samuel M. Langston, Camden, New Jersey. March 9, 1915.

1,131,173 Bead-adjusting device. J. E. Thropp, Trenton, New Jersey. March 9, 1915.

1,131,332 Tire-forming core. Ford Coleman, Akron, Ohio. March 9, 1915.

1,131,760 Tire-making machine. T. J. Whalen, New Brunswick, assignor to H. M. Marble, Newark, both in New Jersey.

1,137,097 Tire-vulcanizing apparatus. James D. Tew, Akron, Ohio, assignor to The B. F. Goodrich Co., New York, N. Y.

1,132,250 Mold for pneumatic tire casings. A. W. Findlayson, Detroit, Michigan, assigner to F. S. Stoepel and Claud D. Doyle, Trustees.

1,132,359 Tire bead wrapping machine. F. W. Kremer, Carlstadt, New Jersey. March 16, 1915.

1,132,635 Automatic machine for constructing a laminated cohesive interwound tubular fabric capable of assuming an annular form. Lawrence A. Subers, Cleveland, Ohio.

1,132,904 Apparatus for shaping the outer casings of pneumatic tires. G. W. Bell, Stockport, England.

1,133,445 Collapsible core. George H. Naylor, assignor to Fred B. Parker, both of Trenton, New Jersey. March 30, 1915.

1,134,293 Fabric-tearing device. William C. Stevens, assignor to the Firestone Tire & Rubber Co., both of Akron, Ohio. April 6, 1915.

1,134,454 Machine for making solid rubber tires. H. Henig, Bridgeport, Connecticut.

1,135,774 Collapsible core for vehicle tires. Peter DeMattia and Barthold DeMattia, both of Garfield, New Jersey, April 13, 1915.

1,136,291 Machine for constructing a laminated cohesive interwound tubular fabric. Lawrence A. Subers, Cleveland, Ohio.

1,136,805 Collapsible core. Guy E. Horton and Casper Wagner, both of Akron, Ohio. April 20, 1915.

1,137,097 Tire-vulcanizing apparatus. J. D. Tew, Akron, Ohio, assignor to The B. F. Goodrich Co., New York, N. Y.

1,137,127 Rubber bead forming and covering apparatus. John R. Gammeter, Akron, Ohio, assignor to The B. F. Goodrich Co., New York, April 27, 1915.

1,137,365 Machine for making or building up pneumatic tires. J. E. Thropp & P. D. Thropp, both of Trenton, and A. DeLaski & Thropp Circular Woven Tire Company, Trenton, all in New Jersey.

1,138,791 Vulcanizing apparatus. T. H. Rieder, Berlin, assignor to Canadian Consolidated Rubber Co., Limited, Montreal,—both in Canada.

1,139,276 Mold for tire fillers. H. J. Hardie, Winnipeg, Manitoba. Canada.

1,139,325 Method of making collapsible cores. Peter Bacher, Canton, Ohio. May 11, 1915.

1,140,045 Core-retaining device. Martin I. Kuhlke, Akron, Ohio. May 18, 1915.

1,140,242 Tire Core. M. Bracey, Thomasville, Georgia.

1,140,499 Core for use in molds and forms. Joseph G. Chalfant and Harvé G. Haun, both of Akron, Ohio. May 25, 1915.

1,140,729 Machine for wrapping annuli. Park E. Welton, Akron, Ohio, May 25, 1915.

1,141,382 Circular braider. Adolph L. DeLeeuw, Cincinnati, Ohio.

1,144,671 Core for manufacture of pneumatic tire casings. Park E. Welton, assignor to Katharine B. Welton, both of Akron, Ohio, June 29, 1915.

1,144,716 Braiding machine. J. Lundgren, assignor to the Carlson-Wenstrom Manufacturing Co., Inc., both of Philadelphia, Pennsylvania.

1,145,446 Automatic machine for making tubular fabric. Lawrence A. Subers, Cleveland, Ohio.

1,146,538 Tire vulcanizer. W. G. Vandegrift, Camp Hill, assignor of one-half to W. Albright, Harrisburg,—both of Pennsylvania.

1,147,254 Method of making tire forming strips. J. T. Lister, Cleveland, Ohio.

1,147,563 Mold for the manufacture of rubber tires. T. Sloper, Devizes, England.

1,147,847 Electric vulcanizer. O. C. Denis, Chicago, Illinois.

1,148,162 Bias-cutting machine. William A. Gordon, Shelton, assignor to the Birmingham Iron Foundry, Derby, both in Connecticut, July 24, 1915.

1,148,171 Pneumatic core for repairing tires. A. L. Johnson & A. O. Alsten, assignors of one-fourth to H. C. Goulding and one-fourth to J. A. Alsten, all of Worcester, Massachusetts.

1,150,922 Apparatus for vulcanizing tire shoes. C. F. Adamson, East Palestine, Ohio, assignor to United States Rubber Co., New York, N. Y.

1,151,924 Steam vulcanizer. E. N. Brown, Cleveland, assignor of one-half to J. Gordon, East Cleveland,—both in Ohio.

1,152,993 Vulcanizer. Peter D. Thropp, assignor to the DeLaski & Thropp Circular Woven Tire Co., Trenton, New Jersey, September 7, 1915.

1,153,324 Tire-vulcanizer apparatus. J. H. Lepach, Ridgeway, Pennsylvania.

1,154,737 Repair vulcanizer. William F. Stearns, Exeter, New Hampshire.

1,154,843 Collapsible core. J. H. Coffey and J. H. Coffey, Jr., Toronto, Canada, assignors of one-half to Gutta Percha & Rubber Limited, Toronto, Canada.

1,155,909 Repair vulcanizer. Frank L. Gibson, Pender, Nebraska.

1,156,180 Tire mold. William A. Robbins, Glen Ridge, New Jersey, October 12, 1915.

1,156,570 Core for manufacture of pneumatic tire casings. Park E. Welton, assignor to Katharine B. Welton, both of Akron, Ohio. October 12, 1915.

1,156,793 Repair vulcanizer. Abel Magri & Arthur V. Griffeth, Port Washington, N. Y.

1,157,117 and 1,157,118 Collapsible core. Thomas Midgley, Columbus, Ohio, Oct. 17, 1915.

1,157,263 Tire core. E. E. Tannar, Akron, Ohio.

1,157,340 Repair vulcanizer. C. Taarud, Minneapolis, Minnesota.

1,157,751 Repair vulcanizer apparatus. J. W. Arthur, Warren, Ohio.

1,158,284 Apparatus for splicing inner tubes. H. Raflovich, New York, N. Y.

1,158,315 Vulcanizer. C. A. Shaler, Waupun, Wisconsin.

1,158,506 Tire-making machine. J. Koch & J. F. Zimmerman, both of Akron, Ohio.

1,158,509 Tube vulcanizer. F. W. Kremer, Rutherford, New Jersey.

1,159,197 Repair vulcanizer. D. P. Einrem, Springfield, South Dakota.

1,159,646 Bead tool. F. F. Brucker, assignor to Miller Rubber Co., both of Akron, Ohio.

1,159,792 Tire mold. G. J. Paynter, Philadelphia, Pennsylvania.

1,159,840 Tire-building machine. W. H. Herman, Lancaster, Ohio.

1,159,895 Machine for making tubes and wires. C. A. Canda, Elizabeth, New Jersey.

1,160,075 Universal tire braiding and wrapping machine. A. H. Harris, Youngstown, Ohio.

1,161,044 Means for repairing pneumatic tires. J. B. Gay, Toronto, Ontario, Canada.

1,161,414 Portable tire vulcanizer. W. G. Sandford, assignor to Positive Tire Vulcanizer Co., both of Davenport, Iowa.

1,161,906 Tire-building machine. C. W. Stultz, Indianapolis, Ind. assignor to G. & J. Tire Co., a corporation of New Jersey.

1,161,946 Apparatus for wrapping pneumatic tire casings. Thomas Midgley, assignor to the Hartford Rubber Works, both of Hartford, Connecticut, November 30, 1915.

1,161,947 Tire-building machine with shaping tool. T. Midgley, Worthington, Ohio, assignor to Morgan & Wright, Detroit, Michigan.

1,161,948 Tire-building machine with smoothing arm. T. Midgley, Worthington, Ohio, assignor to Morgan & Wright, Detroit, Michigan.

1,161,949 Tire-building machine. T. Midgley, Worthington, Ohio, assignor to Morgan & Wright, Detroit, Michigan.

1,162,072 Spring finger tool for tire building machines. W. Kearns, assignor to Morgan & Wright, both of Detroit, Michigan.

1,162,235 Repair vulcanizer. D. S. Hershon, Chelsea, Massachusetts.

1,162,360 Apparatus for centralizing the tread upon the carcass of a tire. Homer J. Hoyt, assignor to Morgan & Wright, both of Detroit, Michigan. November 30, 1915.

1,162,380 Hammer for fixing tire treads. T. Midgley, Worthington, Ohio, assignor to Morgan & Wright, Detroit, Michigan.

1,162,397 Electric tire vulcanizer. R. B. Price, N. Y., assignor to Rubber Regenerating Co., a corporation of Indiana.

1,162,425 Tire builder's tool. D. A. Wilcox, Garden City, New York, assignor to Morgan & Wright, a corporation of Michigan.

1,162,535 Tire repair vulcanizer. C. A. Willey, Battle Creek, Michigan.

1,163,629 Portable repair vulcanizer. A. B. Low, Denver, Colorado.

1,163,651 Clamp for pneumatic tires. M. C. Schwement, West Hoboken, New Jersey, and H. P. Kraft, New York, N. Y.

1,163,999 Process for making treads for tires. Walter Henry, Nottingham, England. December 14, 1915.

1,164,054 Vulcanizing apparatus. J. W. Arthur, Warren, Ohio.

1,164,345 Collapsible core. D. R. Hauawalt, assignor of one-half to M. D. Kuhlke, both of Akron, Ohio.

1,164,639 Internal pressure tire vulcanizing apparatus. John R. Gammeter, assignor to The B. F. Goodrich Co., New York, N. Y. December 21, 1915.

1,164,804 Bead-placing ring. John R. Gammeter, Akron, Ohio, assassignor to The B. F. Goodrich Co., New York, N. Y., December 21, 1915.

1,165,361 Braiding or cord making machine. W. G. Pegg, assignor of one-half to A. Turner & Co., Ltd., both of Leicester, England.

1,165,807 Tire bandage wrapping machine. Roy C. Rossman, Seattle, Washington, December 28, 1915.

1,166,250 Tire-building machine. J. E. Perrault, Belmont, assignor to Hood Rubber Co., Watertown, both in Massachusetts.

1,166,625 Collapsible core. H. E. Nye, Akron, Ohio.

1,166,876 Repair vulcanizer, J. Yemiker & W. S. Vosburgh, both of Akron, Ohio, said Vosburgh assignor to said Yemiker.

1,167,009 Tread vulcanizer. E. Nall, assignor to the Goodyear Tire & Rubber Co., both of Akron, Ohio.

1,167,165 Exhaust heated vulcanizer. C. W. Griffith, assignor of two-thirds to J. Neason and S. A. Trees, all of Altoona, Pennsylvania.

1,167,172 Repair vulcanizer core. W. L. Heinig and M. A. Johnston, both of Denver, Colorado.

1,168,820 Repair vulcanizer for tires and other articles. W. H. Miles, Longton, England.

1,169,204 Tire flap making machine. William C. Stevens, assignor to the Firestone Tire & Rubber Co., both of Akron, Ohio. January 25, 1916.

1,169,455 Bias cutter take-up. William C. Stevens, assignor to the Firestone Tire & Rubber Co., both of Akron, Ohio. January 25, 1916.

1,169,576 Portable repair vulcanizer. C. A. Shaler, Waupun, Wisconsin.

1,170,423 Collapsible core. W. R. Denman, assignor to Miller Rubber Co., both of Akron, Ohio.

1,170,424 Collapsible core. W. R. Denman, assignor to Miller Rubber Co., both of Akron, Ohio.

1,170,600 Apparatus for the vulcanization of pneumatic tires with non-skid leather treads. M. Bergougnan, Paris, assignor to Société Générale des Etablissements Bergougnan, Clermont-Ferrand, both in France.

1,171,038 Repair vulcanizer. T. D. Gard, Kokomo, Indiana.

1,172,883 Ring core revolving machine. John R. Gammeter, Akron, Ohio, assignor to The B. F. Goodrich Co., New York, N. Y. February 22, 1916.

1,174,254 Tire-repair device. C. F. Jenkins, Washington, D. C.

1,174,885 Manufacture of tire casings. Colin Macbeth, Aston, Birmingham, England, assignor to the Dunlop Rubber Co., Limited, Westminster, England, March 7, 1916.

1,175,681 Pneumatic tire mold. G. E. Batcheller, New York, N. Y. March 14, 1916.

1,176,885 Method and appliances for building tire casings. W. R. Denman, assignor to the Miller Rubber Co., both of Akron, Ohio. March 28, 1916.

1,177,112 Tire-vulcanizing bag. John Thomas Johnson, Jr. and John R. Gammeter, Akron, Ohio, assignors to The B. F. Goodrich Co., New York, N. Y., March 28, 1916.

1,177,197 Tire-builder's tool. Z. McNeil, assignor to Morgan & Wright, both of Detroit, Michigan.

1,177,755 Collapsible core. A. Adamson, Akron, Ohio.

1,177,756 Collapsible core. A. Adamson, Akron, Ohio.

1,178,974 Tire-making machine. P. D. Thropp and J. E. Thropp and A. DeLaski, all of Weehawken, assignors to The DeLaski & Thropp Circular Woven Tire Co., Trenton, both in New Jersey.

1,179,200 Means for splicing inflatable tubes. D. Lowe, East Akron, Ohio.

1,179,033 Method of and apparatus for reinforcing inflatable tire tubes. J. H. Poole, assignor to Reinforced Inner Tube Co., both of Brockton, Massachusetts.

1,179,077 Machine for forming rubber tubes and the like. E. S. Current, Beach City, Ohio.

1,179,545 Bead wire taping machine. Thomas Midgley, Worthington, Ohio, assignor to Morgan & Wright, Detroit, Michigan. April 18, 1916.

1,179,738 Vulcanizer. Thomas C. Marshall, Akron, Ohio, assignor to the Kelly-Springfield Tire Co., Jersey City, New Jersey, April 18, 1916.

1,179,898 Molding pneumatic tires. Joseph H. Coffey, Jr. and Joseph Coffey, assignors of one-half to Gutta Percha & Rubber Limited, all of Toroton, Canada. April 18, 1916.

1,180,309 Tire bead trimming machine. Thomas Midgley, assignor to Morgan & Wright, both of Detroit, Michigan. April 25, 1916.

1,180,310 Bead-cleaning machine. Thomas Midgley, Worthington, Ohio, assignor to Morgan & Wright, Detroit, Michigan, April 25, 1916.

1,181,085 Repair vulcanizing device for rubber tires. J. B. Rosenstein, assignor to the Marvel Accessories Manufacturing Co., both of Cleveland, Ohio.

1,181,254 Machine for cutting beads. W. C. Stevens, assignor to Firestone Tire & Rubber Co., both of Akron, Ohio.

1,181,692 Repair vulcanizer. J. B. Stroud, Pass Christian, Minnesota.

1,181,987 Repair vulcanizer. E. Bellerose, Watervliet, New York.

1,182,199 Machine for molding tubes. N. Norris, assignor to the B. & R. Rubber Co., both of North Brookfield, Massachusetts.

1,183,907 Apparatus for making cores for resilient wheel tires. F. V. Roesel and C. H. Franks, Akron, Ohio.

1,183,121 Core for resilient wheel tires. F. V. Roesel and C. H. Franks, Akron, Ohio.

1,183,553 Machine and method for making tires. John R. Gammeter, Akron, Ohio, assignor to The B. F. Goodrich Co., New York, N. Y., May 16, 1916.

1,184,328 Method of making tires. Mark A. Dees, St. Louis, assignor to American Tire Co., both of St. Louis, Missouri.

1,184,619 Bead-wire forming machine. F. C. Brucker, assignor to the Miller Rubber Co., both of Akron, Ohio. May 23, 1916.

1,184,774 Tire mold. William A. Robbins, Glen Ridge, New Jersey, May 30, 1916.

1,187,339 Bead-forming machine. C. Kuentzel, assignor to the Republic Rubber Co., both of Youngstown, Ohio. June 13, 1916.

1,187,436 Portable repair vulcanizer. A. B. Low, Denver, Colorado.

1,188,091 Inner tube tire mold. T. W. Morris, assignor of one-half to G. B. Dryden, both of Chicago, Illinois.

1,188,418 Tubular tire fabric loom. F. S. Dickinson, New York, N. Y.

1,188,538 Casing repair spreader. J. J. Greene & A. A. Weher, New York, N. Y.

1,189,192 Collapsible core. J. C. Cole, assignor to the Fisk Rubber Co., both of Chicopee Falls, Massachusetts, June 27, 1916.

1,189,666 Cord or strip wrapping machine, J. H. Coesir, Joplin, Mo.

1,189,724 Machine for reeling bias fabric strips for tires. DeCourcy Neal, assignor to Morgan & Wright, both of Detroit, Michigan. July 4, 1916.

1,189,751 Subers fabric strip machine. L. A. Subers, Cleveland, Ohio.

1,190,315 Tire flap trimming machine. Thomas Midgley, assignor to Morgan & Wright, Detroit, Michigan, July 11, 1916.

1,190,432 Tire forming apparatus. J. T. Lister, Cleveland, Ohio.

1,190,433 Tire-building machine. John T. Lister, Cleveland, Ohio, July 11, 1916.

1,191,523 Tool for removing tires. D. H. McPherson, LeRoy, N. Y.

1,192,017 Subers cord covering machine. L. A. Subers, East Cleveland, Ohio.

1,192,181 Bead-rolling device for pneumatic tires. J. R. Gammeter, Akron, Ohio, assignor to The B. F. Goodrich Co., New York, N. Y.

1,192,272 Pneumatic tire core. H. C. Brown & G. Williams, Akron, Ohio, assignors of one-third to E. McSweeney.

1,192,874 Separable core. W. R. Denman, Akron, Ohio.

1,192,937 Tire-repair tool. L. V. Rood, Marietta, Ohio.
1,192,994 Art of and mold for making rubber tires. M. A. Dees, assignor to American Tire Co., both of St. Louis, Missouri.
1,193,691 Tire casing inspecting machine. H. J. Hoyt, assignor to Morgan & Wright, both of Detroit, Michigan, Aug. 8, 1916.
1,194,967 Pneumatic tire building apparatus. P. DeMattia and B. DeMattia, Clifton, New Jersey.
1,194,968 Pneumatic tire building core. P. DeMattia and B. DeMattia, Clifton, N. J.
1,195,332 Conveyors for cores. L. J. Boznar, Akron, Ohio.
1,195,337 Tire repair vulcanizer attachment for automobiles. R. Cannon & S. Gray, Paisley, Oregon.
1,195,480 Separable core for making pneumatic tire casings. J. C. Lauritzen, Akron, Ohio.
1,195,554 Machine for making and coating weftless fabrics. Eugene Bourdin, Lyons, France.
1,196,513 Collapsible core for tire casings. W. F. Brunswick, Akron, Ohio.
1,196,648 Apparatus for making rubber tubes. A. Bleecker, Akron, Ohio.
1,197,253 Mold for forming treads on pneumatic tires. P. A. Biddinger, assignor of one-half to A. Kallmerten—both of Mansfield, Ohio.
1,197,484 Tire-repair vulcanizer. O. A. Hayner and H. L. Hayner, Mason, Michigan.
1,197,521 Collapsible core. F. D. Mason, Akron, Ohio.
1,197,522 Bead trimmer. F. D. Mason, assigner to The Bridgewater Machine Co., both of Akron, Ohio.
1,197,758 Tire mounting and demounting tool. J. J. O'Brien, St. Louis, Missouri.
1,198,790 Collapsible former for building tire casings. J. D. Tew, Akron, Ohio.
1,198,875 Pressure applying vulcanizing mold. T. Sloper, Devizes, England.
1,200,009 Repair vulcanizer. O. B. Nelson, assignor to National Lock Co., both of Rockford, Illinois.
1,200,014 Tire bead placing device. M. Paridon, assignor of one-half to H. A. Rudd, both of Barberton, Ohio.
1,200,016 Tire-building machine. M. Paridon, assignor of one-half to H. A. Rudd, both of Barberton, Ohio.

1,200,603 Fluid pressure vulcanizing apparatus. John R. Gammeter, Akron, Ohio, assignor to The B. F. Goodrich Co., New York, N. Y., October 10, 1916.

1,201,397 Tire-repair vulcanizer. F. S. Wahl, N. Tonawanda, assignor of one-half to G. G. Mattern, Kenmore, both of New York.

1,201,778 Tire mounting implement. W. L. Weber, assignor to the Essenkay Products Co., both of Chicago, Illinois.

1,202,452 Tire rim tool. J. B. Stroud, Pass Christian, Mississippi.

1,202,654 Tire rim tool. F. A. Berry, London, Tennessee.

1,202,884 Machine for making pneumatic tire shoes. Michael Paridon, assignor of one-half to Henry A. Rudd, both of Barberton, Ohio, October 31, 1916.

1,204,021 Portable vulcanizer. E. T. Horsey, Cleveland, Ohio.

1,204,213 Tube-wrapping machine. J. A. Vey, assignor to Continental Rubber Works, both in Erie, Pennsylvania.

1,205,203 Tread-cementing machine. John Hibner, assignor to Morgan & Wright, both of Detroit, Michigan. November 21, 1916.

1,206,420 Yarn impregnating apparatus. Walter R. Denman, assignor to the Miller Rubber Co., both of Akron, Ohio.

1,206,530 Machine for forming strips for automobile tire treads. William A. Gordon, Sheldon, assignor to the Birmingham Iron Foundry, Derby, both in Connecticut. November 28, 1916.

1,209,161 Fabric distorting device for tire building machines. H. J. Hoyt, assignor to Morgan & Wright, both of Detroit, Michigan.

1,209,162 Vulcanizing apparatus. H. J. Hoyt, assignor to Morgan & Wright, both of Detroit, Michigan.

1,209,536 Tire builder's tool. C. A. Arnold, assigner to the Hartford Rubber Works, both of Hartford, Connecticut.

1,209,607 Mold for non-skid treads. J. H. Michelin, New Brunswick, assignor to Michelin Tire Co., Milltown, both in New Jersey.

1,209,779 Tire-building apparatus. R. L. Taft, assignor to The Hartford Rubber Works Co., both of Hartford, Connecticut.

1,210,154 Process of and means for making tire reliners, J. L. G. Dykes, Chicago, Illinois.

1,210,926 Horizontal press vulcanizer. John R. Gammeter, Akron, Ohio, assignor to The B. F. Goodrich Co., New York, N. Y., January 2, 1917.

1,211,256 Tire-stripping machine. W. C. Stevens, assignor to the Firestone Tire & Rubber Co., both of Akron, Ohio.

1,211,827 Tire-winding machine (pneumatic control). Walter R. Denman of Akron, assignor to the Miller Rubber Co., of Akron, Ohio.

1,211,886 Convertible tire mold. H. J. Smith, New Castle, assignor of one-half to J. S. Wilson, Pittsburgh, both in Pennsylvania.

1,211,918 Manufacture of tire shoes. Henry Z. Cobb, Winchester, Massachusetts, assignor to the United States Rubber Co., New Brunswick, New Jersey. January 9, 1917.

1,212,457 Mechanical expansion mold. B. Darrow, assignor to the Goodyear Tire & Rubber Co., both of Akron, Ohio.

1,213,026 Tire-stapling machine. A. A. Ewald, Oakfield, Wisconsin.

1,213,029 Repair vulcanizer. E. Fetter, Baltimore, Maryland.

1,213,223 Tire press-vulcanizer. N. W. McLeod, Missouri, assignor to American Motors Tire Co., Detroit, Michigan.

1,213,224 Apparatus for forming and vulcanizing rubber articles. Nelson W. McLeod, St. Louis, Missouri, assignor to the American Motors Tire Co., Detroit, Michigan, January 23, 1917.

1,213,225 Mold for making pneumatic tires. Nelson W. McLeod, St. Louis, Missouri, assignor to the American Motors Tire Co., Detroit, Michigan, January 23, 1917.

1,213,525 Collapsible core. R. M. Merriam, Akron, Ohio.

1,213,600 Tire and method of making it W. H. Dunkerly, Patterson, New Jersey.

1,213,601 Braiding machine. William H. Dunkerley, Patterson, New Jersey.

1,214,277 Apparatus for vulcanizing tire shoes. H. Z. Cobb, Winchester, Massachusetts, assignor to United States Rubber Co., New Brunswick, New Jersey.

1,124,888 Tire-casing mold. W. H. Burritt, St. Louis, Missouri.

1,215,648 Tire-forming apparatus. R. T. Griffith, assignor to the Miller Rubber Co., both of Akron, Ohio.

1,215,828 Mold for making pneumatic tires. N. W. McLeod, St. Louis, Missouri, assignor to American Motors Tire Co., Detroit, Michigan.

1,216,329 Tire-building machine. Franklin W. Kremer, Carlstadt, New Jersey, February 20, 1917.

1,217,879 Cord fabric machine. Ernest A. Pyne, Newark, New Jersey, assignor to Musselman Cord Fabric Co., Chicago, Illinois.

1,218,101 Steam-repair vulcanizer. J. Mathey, Omaha, Nebraska.

1,218,155 Machine for painting tire casings. John F. Zimmerman, Akron, Ohio, March 6, 1917.

1,218,245 Vulcanizing repair tool. E. R. Drave, Richmond, Indiana.

1,218,441 Repair vulcanizer. J. Michel, Philadelphia, Pennsylvania.

1,218,763 Tensioning device for tire-making machine. F. H. Grove, Columbiana, Ohio.

1,218,881 Tire rim setter. V. C. McLain, assignor to E. J. Bronson, both of East Moline, Illinois.

1,220,178 Method and apparatus for applying rubber covers to the tire carcasses. Ferdinand B. Brucker, assignor to the Miller Rubber Co., both of Akron, Ohio, March 27, 1917.

1,224,878 Tire fabric and method of making the same. George F. Fisher, Plainfield, New Jersey, assignor to the Hartford Rubber Works Co., Hartford Connecticut.

1,228,144 Anchorage for cords or cord tires. Benjamin L. Stowe, Jersey City, New Jersey, assignor to Morgan & Wright, Detroit, Michigan.

1,230,262 Machine for wrapping rubber tubes. I. Zwisler, assignor to The McGraw Tire & Rubber Co., both of East Palestine, Ohio.

1,230,415 Tire-building machine. F. W. Kremer, Carlstadt, New Jersey.

1,230,937 Tire-builder's tool. W. Thompson, assignor to Morgan & Wright, Detroit, Michigan.

1,230,947 Tire-building tool, William Thompson, assignor to Morgan & Wright, both of Detroit, Michigan. June 26, 1917.

1,231,645 Tire vulcanizer. Fred B. Pfeiffer, Akron, Ohio, July 3, 1917.

1,233,079 Flexible core for tire forming machine. J. T. Lister, Cleveland, Ohio.

1,233,260 Core jack. J. H. Mulloy, Michigan, assignor to Morgan & Wright, both of Detroit, Michigan.

1,237,422 Machine for studding tire bands and tire treads, and for similar purposes. William Alfred Turpin, London, England, and Donald Gardner Snodgrass, Birmingham, England, assignors to the Dunlop Rubber Co., Limited, Birmingham, England, August 21, 1917.

1,237,810 Guiding device for paper-wrapping machine. F. M. Pierce, assignor to Pierce Wrapping Machine Co., both of Chicago, Illinois.

1,237,811 Adjusting mechanism for paper-wrapping machine. F. M. Pierce, assignor to Pierce Wrapping Machine Co., Chicago. Illinois.

1,238,318 Paper-wrapping machine for tires. Thomas Midgley, Worthington, Ohio, assignor to Morgan & Wright, Detroit, Michigan, August 28, 1917.

1,239,019 Wrapping machine. N. I. Lloyd, Butte, Montana.

1,241,678 Adjusting means for paper wrapping machines. W. C. Stevens, Akron, Ohio, assignor to Pierce Wrapping Machine Co., Chicago, Illinois.

1,241,913 Bead-positioning device. J. F. Bradley, West Springfield, assignor to the Fisk Rubber Co., Chicopee Falls,—both of Massachusetts.

1,241,942 Collapsible core. W. Y. Duncan, Jr., Springfield, assignor to The Fisk Rubber Co., Chicopee Falls, both in Massachusetts.

1,242,073 Method of making tire casings. James D. Tew, Akron, Ohio, assignor to The B. F. Goodrich Co., New York, N. Y.

1,242,365 Molding and semi-curing non-skid tread bands. Edward Nall, assignor to the Goodyear Tire & Rubber Co., both of Akron, Ohio. October 9, 1917.

1,242,371 Shuttle lock for paper-wrapping machines. F. M. Pierce, assignor to Pierce Wrapping Machine Co., both of Chicago, Illinois.

1,242,385 Molding machine. William L. Springer, Park Ridge, Illinois. October 9, 1917.

1,243,076 Tire-making machine. F. W. Kremer, Carlstadt, New Jersey.

1,243,357 Paper-wrapping machine folder. W. C. Stevens, Akron, Ohio, assignor to Pierce Wrapping Machine Co., Chicago, Illinois.

1,244,245 Tire-inspecting machine. William H. Robertson, Rockford, Illinois, October 23, 1917.

1,244,255 Folder device for wrapping machines. W. C. Stevens, Akron, Ohio, assignor to Pierce Wrapping Machine Co., Chicago, Illinois.

1,245,067 Cord impregnating and drying apparatus. James D. Tew, Akron, Ohio, assignor to The B. F. Goodrich Co., New York, N. Y.

1,245,898 Die for tire tubing machines. W. R. Gates, assignor to Revere Rubber Co., both of Providence, Rhode Island.

1,246,260 Tire-wrapping machine. J. O. Goodwin, Akron, Ohio.
1,246,488 Tread-applying machine. J. L. Swartz, Akron, Ohio.
1,246,832 Tire-wrapping device. N. Ahrbin, Chicago, Illinois.
1,247,434 Tire core. E. M. McCurry, Columbiana, Ohio.
1,248,645 Tire machine. W. O. Gottwals, Washington, D. C.
1,248,681 Separable core for making pneumatic tire casings. J. S. Lauritzen, Akron, Ohio.
1,248,962 Tubing apparatus. E. G. Webber, assignor to the Fisk Rubber Co., both of Chicopee Falls, Massachusetts.
1,248,963 Tubing die. E. G. Webber, assignor to the Fisk Rubber Co., both of Chicopee Falls, Massachusetts.
1,249,033 Mandrel for vulcanizing tire shoes. Henry Z. Cobb, Winchester, Massachusetts, assignor to the United States Rubber Co., New Brunswick, New Jersey, December 4, 1917.
1,249,040 Tire-building core. P. DeMattia and B. DeMattia, both of Clifton, New Jersey.
1,250,338 Machine for making flaps for pneumatic tires. E. Nall, assignor to the Goodyear Tire & Rubber Co., both of Akron, Ohio.
1,250,916 Apparatus for making cord tire skeletons. Nelson W. McLeod of St. Louis, Missouri, assignor by mesne assignments to American Motor Tire Company, Detroit, Michigan.
1,250,917 Art of making cord tires. Nelson W. McLeod, assignor by mesne assignment to American Motors Tire Co., Detroit, Michigan.
1,251,032 Cord-impregnating apparatus. Clair G. Hoover, assignor to the Goodyear Tire & Rubber Co., both of Akron, Ohio.
1,251,138 Tire-mounting chuck. W. C. Tyler and G. B. Heffelfinger, assignors to the Goodyear Tire & Rubber Co., all of Akron, Ohio.
1,251,088 Core-cooling apparatus. E. Nall, assignor to the Goodyear Tire & Rubber Co., both of Akron, Ohio.
1,252,049 Tire-building machine. W. J. Steinle, Elmhurst Heights, N. Y., assignor to Rubber Regenerating Co., a corporation of Indiana.
1,252,106 Tube-repair vulcanizer. R. Hagen, Dayton, Ohio.
1,252,109 Cross-wrapping machine. O. E. Heckman, Akron, Ohio.
1,253,105 Machine for making tire carcasses. William C. Stevens, assignor to the Firestone Tire & Rubber Co., both of Akron, Ohio. January 8, 1918.

1,253,925 Tire-making machine. F. H. Moyer, assignor to the Firestone Tire & Rubber Co., both of Akron, Ohio.

1,254,827 Tire-building machine. T. Midgley, Lancaster, Ohio, assignor to Morgan & Wright, a corporation of Michigan.

1,255,073 Tire-building machine. A. O. Abbott, Jr., assignor of one-half to W. B. Norton, both of Detroit, Michigan.

1,255,086 Wrapper for automobile tires, etc. Alfred E. Dubey, Brooklyn, New York, assignor to Domestic Mills Paper Co., New York, N. Y., January 29, 1918.

1,255,098 Strip-cutting apparatus. G. H. Lewis, assignor to the Fisk Rubber Co., both of Chicopee Falls, Massachusetts.

1,255,320 Machine for forming pneumatic tire casings. G. F. Knight and B. M. Frank, both of Canton, Ohio, said Frank assignor to said Knight.

1,255,456 Apparatus for making inner tubes. J. G. Moomy, Erie, Pennsylvania.

1,256,503 Web-tensioning device. G. H. Lewis, assignor to the Fisk Rubber Co., both of Chicopee Falls, Massachusetts.

1,256,704 Press vulcanizer. John C. Lauritzen, Akron, Ohio. February 19, 1918.

1,256,716 Tire-tread building machine. T. Midgley, Worthington, Ohio, assignor to Morgan & Wright, Detroit, Michigan.

1,256,841 Quick-acting tire chuck. W. C. Stevens, assignor to the Firestone Tire & Rubber Co., both of Akron, Ohio.

1,257,592 Mold for wheel tires. T. Midgley, Worthington, Ohio, assignor to Morgan & Wright, Detroit, Michigan.

1,258,716 and 1,258,717 Tire-stripping machine. William C. Stevens, assignor to the Firestone Tire & Rubber Co., both of Akron, Ohio, March 12, 1918.

1,260,191 Tire-tread making machine. G. A. Hagstrom, Kansas City, Missouri.

1,260,275 Mandrel for making inner tubes for pneumatic tires. J. A. McTaggart, Philadelphia, Pennsylvania.

1,260,990 Vulcanizing apparatus. H. J. Doughty, Edgewood, Rhode Island, assignor to Doughty Tire Co., Portland, Maine.

1,260,992 Motor tire applying apparatus. W. C. Stevens, assignor to the Firestone Tire & Rubber Co., both of Akron, Ohio.

1,262,695 Apparatus for molding tires. F. Paylsen, Minneapolis, Minnesota.

1,263,286 Machine for trimming tires. E. D. Putt, assignor to the Firestone Tire & Rubber Co., Akron, Ohio.

1,263,292 Bias fabric assembling table. W. C. Stevens, assignor to the Firestone Tire & Rubber Co., both of Akron, Ohio.

1,263,400 Tire former or core. A. A. Frank, Milwaukee, Wisconsin.

1,263,681 Tire and method of making it. Franklin W. Kremer, Rutherford, New Jersey, April 23, 1918.

1,263,923 Tire-wrapping machine. F. M. Pierce, assignor to Pierce Wrapping Machine Co., both of Chicago, Illinois.

1,263,924 Double wrapper wrapping machine. F. M. Pierce, assignor to Pierce Wrapping Machine Co., both of Chicago, Illinois.

1,264,170 Tire-building machine. George F. Fisher, Plainfield, New Jersey, and Raymond B. Price, New York, N. Y., assignors to the Hartford Rubber Works Co., Hartford, Connecticut. April 30, 1918.

1,264,613 Collapsible tire-making core. F. B. Converse, Akron, Ohio, assignor to The B. F. Goodrich Co., New York, N. Y.

1,264,641 Tire-shrinking machine. J. A. Hamilton, Tulsa, Oklahoma.

1,266,364 Tire-building machine. M. B. Wheeler, New York, N. Y.

1,268,482 Tire carcass supporting means. H. I. Morris, assignor to the Savage Tire Co., San Diego, California.

1,269,229 Apparatus and method for manufacturing tires, hose, etc. M. Smith, Passaic, New Jersey.

1,270,154 Tire vulcanizer. C. B. Heim, Marco, Indiana.

1,270,380 Machine and method for applying rubber treads to pneumatic tires. Francis B. Converse, Akron, Ohio, assignor to The B. F. Goodrich Co., New York, N. Y. June 25, 1918.

1,270,459 Tire-bead trimming machine. R. L. Taft, assignor to the Hartford Rubber Works Co., both of Hartford, Connecticut.

1,270,604 Apparatus for making inner tubes for tires. H. Dech, assignor to Mercer Tire Co., both of Trenton, New Jersey.

1,270,895 Machine for applying a layer of rubber to a tire rim. W. C. Stevens, assignor to the Firestone Tire & Rubber Co., both of Akron, Ohio.

1,272,555 Tire-building machine, W. J. Steinle, Elmhurst Heights, New York, assignor to the Rubber Regenerating Co., Mishawaka, Indiana.

1,273,071 Tire-making machine. C. Kuentzel, assignor to the Republic Rubber Co., both of Youngstown, Ohio.

1,274,073 Device for shaping and vulcanizing automobile tire patches. A. L. Murray, assignor to the Double Fabric Tire Co., both of Auburn, Indiana.

1,274,465 Machine for inserting cross-wires in solid tires. W. C. Stevens, assignor to Firestone Tire & Rubber Co., both of Akron, Ohio.

1,275,072 Tube-wrapping machine. J. G. Moomy, Erie, Pennsylvania.

1,275,585 Tire core. V. L. Cox, assignor of one-half to A. Schonenberger, both of Akron, Ohio.

1,275,794 Tire-building machine with revoluble core. J. D. Thomson, assignor to the Goodyear Tire & Rubber Co., both of Akron, Ohio.

1,276,041 Expansible mandrel. J. L. D. Dykes, Chicago, Illinois.

1,276,592 Means for making rubber tires. James A. Swinehart, Akron, Ohio. August 20, 1918.

1,276,654 Expanding metal core. W. A. Hirsch, Avalon, Pennsylvania.

1,276,942 Machine for molding tire covers on rotatable core. F. H. Mercer and H. F. H. Blease, both of Merksham, England.

1,277,716 Tongs for tire cores. O. Grosvenor, New York, N. Y., assignor to Morgan and Wright, Detroit, Michigan.

1,277,729 Calender tire tread stock. William Kearns, assignor to Morgan & Wright, both of Detroit, Michigan. September 2, 1918.

1,278,266 Tire-wrapping machine. P. E. Welton, Cuyahoga Falls, Ohio, assignor to Birmingham Iron Foundry, Derby, Connecticut.

1,278,637 Traveling buck for tire-building machines. L. B. Griffin, Muskegon, Michigan.

1,278,980 Shaping device for tire-building machine. F. C. Morton, Cambridge, Massachusetts, assignor of one-half to F. B. Carlisle, Cranston, Rhode Island, and one-fourth to the Goodyear Tire & Rubber Co., Akron, Ohio.

1,279,214 Tire core. C. F. Ames, Akron, Ohio.

1,279,337 Tire-making machine. W. B. Harsel, assignor to the Goodyear Tire & Rubber Co., both of Akron, Ohio.

1,279,404 Annular shuttle for tire-wrapping machine. H. I. Morris, San Diego, California, assignor to the DeLaski & Thropp Circular Woven Tire Co., Trenton, New Jersey.

1,279,405 Rotary shuttle for tire-wrapping machine. H. I. Morris, San Diego, California, assignor to the DeLaski & Thropp Circular Woven Tire Co., Trenton, New Jersey.

1,281,522 Collapsible core for tires. F. B. Converse, Akron, Ohio, assignor to The B. F. Goodrich Co., New York, N. Y.

1,281,600 Collapsible core for tires. G. H. Lewis, assignor to the Fisk Rubber Co., both of Chicopee Falls, Massachusetts.

1,282,294 Unwrapping machine. A. W. Ross, Akron, Ohio.

1,283,275 Vulcanizing patch holding device. W. E. Nye, Highlands, California.

1,283,337 Power stitcher for retreading automobile tires. R. H. Sikes, Los Angeles, California.

1,283,630 Vulcanizing press for curing concave-convex blow-out patches. T. W. Bean and T. J. Hennessy, assignors to Firestone Tire & Rubber Co., all of Akron, Ohio.

1,283,778 Tire mold. E. G. Hulse, Akron, Ohio, assignor to Kelly-Springfield Tire Co., Jersey City, New Jersey.

1,283,948 Core-cleaning machine. W. C. Stevens, assignor to Firestone Tire & Rubber Co., both of Akron, Ohio.

1,283,998 Core for tires and tire carcasses. C. W. Wattleworth, assignor to the Goodyear Tire & Rubber Co., both of Akron, Ohio.

1,285,321 Machine for manufacturing inner tubes. E. Nall, assignor to the Goodyear Tire & Rubber Co., both of Akron, Ohio.

1,285,853 Interlocking mold for making tires. C. Wattleworth, assignor to the Goodyear Tire & Rubber Co., both of Akron, Ohio.

1,285,976 Machine for making tires. J. R. Gammeter, Akron, Ohio, assignor to The B. F. Goodrich Co., New York, N. Y., (original application divided).

1,286,466 Tire-wrapping machine. C. B. Whittelsey, assignor to the Hartford Rubber Works Co., both of Hartford, Connecticut.

1,287,256 Vulcanizing press. P. and B. DeMattia, Clifton, New Jersey.

1,288,181 Vulcanizing press. J. Pollak, Dorchester, Massachusetts.

1,288,733 Tire-opening machine. W. C. Stevens, assignor to Firestone Tire & Rubber Co., both of Akron, Ohio.

1,288,862 Tire-building machine. G. F. Fisher, Roselle, New Jersey, assignor to Morgan & Wright, Detroit, Michigan.

1,289,233 Core-handling apparatus for tire-building machine. De C. Neal and A. O. Abbott, Jr., assignors to Morgan & Wright, all of Detroit, Michigan.

1,289,746 Tire mold. A. Hargraves, assignor to Firestone Tire & Rubber Co.,—both of Akron, Ohio.

1,289,768 Apparatus for manufacturing pneumatic tires. E. Hopkinson, New York, N. Y.

1,289,769 Mold for pneumatic tires. E. Hopkinson, New York, N. Y.

1,289,773 Vulcanizing apparatus for pneumatic tires. E. Hopkinson, New York, N. Y.

1,289,774 Apparatus for manufacturing pneumatic tires. E. Hopkinson, New York, N. Y.

1,289,775 Pneumatic tire-building machine. E. Hopkinson, New York, N. Y.

1,289,779 Mold for pneumatic tires. E. Hopkinson, New York, N. Y.

1,289,949 Apparatus for manufacturing automobile tires. W. C. Stevens, assignor to Firestone Tire & Rubber Co., both of Akron, Ohio.

1,291,811 Repair vulcanizer. J. W. Dean, Jr., assignor to J. W. Dean, Sr., both of Pond, Missouri.

1,292,052 Apparatus for manufacturing tires or interliners. W. F. Ray, Chicago, Illinois.

1,294,681 Tire-wrapping machine. G. H. Lewis, assignor to the Fisk Rubber Co., both of Chicopee Falls, Massachusetts.

1,294,865 Pressure device for vulcanizing rubber tires. D. E. Booth, Tulsa, Ohio.

1,295,643 Tire-repair vulcanizer. S. LeF. Varvel, assignor to W. A. Windeyer, R. J. Vincent and H. J. Davys, all of Sydney, Australia.

1,296,215 Tire vulcanizer. W. F. Ray, Chicago, Illinois.

1,296,291 Vulcanizing apparatus, including mold. J. E. James, and A. W. Adams, both of Alameda, California.

1,296,762 Machine for making tire casings. F. B. Carlisle, North Kingston, Rhode Island, assignor to H. M. Gilbert, New York, N. Y.

1,296,990 Bead-cementing and reeling machine. G. McNeil, assignor to Morgan & Wright—both of Detroit, Michigan.

1,296,991 Bead-wrapping apparatus. C. McNeill, assignor to Morgan & Wright, both of Detroit, Michigan.

1,297,186 Tire-deflating machine. H. P. Kraft, Ridgwood, New Jersey.

1,297,226 Sectional core for tires. J. H. Nesbitt and J. C. Lauretzen, assignors by direct and mesne assignments of one-third to said Lauritzen and two-thirds to The Williams Foundry & Machine Co.—all of Akron.

1,297,765 Retread vulcanizer. P. H. Wilkinson, San Bernadino, California.

1,298,124 Tire-building machine. W. C. Tyler, Racine, Wisconsin, assignor to the Goodyear Tire & Rubber Co., Akron, Ohio.

1,298,612 Repair vulcanizer. C. T. White, Santa Barbara, assignor of one-third to G. E. White, and one-third to W. E. Monck, all in California.

1,298,620 Repair vulcanizer. J. H. Wright, Lebanon, Missouri.

1,298,945 Expansible core for vulcanizing tires. J. P. Smith, assignor to the Firestone Tire & Rubber Co., both of Akron, Ohio.

1,299,465 Apparatus for forming duplicate tire molds. B. Branville, New York, N. Y.

1,299,497 Machine for shaping tire covers. F. H. Mercer and H. F. H. Blease, Melksham, England.

1,300,341 Tool-mounting for tire-machines. J. L. Butler, Akron, Ohio, assignor to The B. F. Goodrich Co., New York, N. Y.

1,300,391 Core for tire casings. C. D. Hibbs, Fort Worth, Texas.

1,301,148 Pressure bag for use in tire casing vulcanization. M. A. Marquette, Springfield, assignor to the Fisk Rubber Co., Chicopee Falls, both in Massachusetts.

1,301,431 Apparatus for retread vulcanizing. E. Harris, Los Angeles, California.

1,302,122 Tire-making machine. L. P. Arnold, Norwalk, Connecticut.

1,302,660 Machine for making pneumatic tire flaps. E. G. Hulse, Akron, Ohio, assignor to Kelly-Springfield Tire Co., Jersey City, New Jersey.

1,303,256 Tire core. D. A. Clark and C. E. Lowe, assignors to the Clyde E. Lowe Co., all of Cleveland, Ohio.

1,303,485 Machine for grooving and finishing tires. R. H. Keaton, San Francisco, California.

1,303,492 Stock-rack for tire-building machine. C. Kuentzel, Youngstown, assignor by mesne assignment to the Goodyear Tire & Rubber Co., both in Ohio.

1,304,995 Machine for making rubberized fabric tubes and strips. J. T. Lister, Cleveland, Ohio.

1,305,408 Vulcanizing apparatus. J. E. Rasor, Sherman, Texas.

1,305,474 Vulcanizing apparatus with endless series of mold sections. G. H. Lewis, assignee to the Fisk Rubber Co., both of Chicopee Falls, Massachusetts.

1,306,008 Repair vulcanizer. S. W. Harris, assignor to the Akron rubber Mold & Machine Co., both of Akron, Ohio.

1,306,098 Tire-unwrapping machine. C. Brown, Knoxville, assignor of 1-3 to B. F. and F. J. Lively, Lenoir City, Tennessee.

1,307,079 Apparatus for curing tire casings. P. P. Borigio, and E. Stephenson, both of Fort Worth, Texas.

1,307,372 Tire mold. K. A. Palmer and J. C. Irvin, New York, N. Y.

1,307,435 Collapsible tire core. E. J. Bundy, assignor to the McGraw Tire & Rubber Co., both of East Palestine, Ohio.

1,307,798 Collapsible mold for retreading tires. P. M. Stephen, San Francisco, California.

1,308,292 Bead-drying apparatus. George McNeill, assignor to Morgan & Wright, both of Detroit, Michigan. July 1, 1919.

1,308,517 Tire vulcanizer. J. K. Williams, assignor to The Williams Foundry & Machine Co., both of Akron, Ohio.

1,308,834 Repair vulcanizer. J. W. Arthur, assignor to the Williams Foundry & Machine Co., both of Akron, Ohio.

1,309,424 Cord-fabric forming machine. Frank A. Seiberling, assignor to the Goodyear Tire & Rubber Co., both of Akron, Ohio.

1,309,894 Tire treading apparatus. K. B. Kilborn, assignor to the Goodyear Tire & Rubber Co., both of Akron, Ohio.

1,310,236 Tire-making machine. J. R. Gammeter, Akron, Ohio.

1,310,701 Machine for building pneumatic tire casings. E. Hopkinson, New York, N. Y.

1,311,375 Press for vulcanizing tires to different degrees of hardness. J. H. Berkenbenel, Portland, Oregon.

1,311,613 Tire-vulcanizing apparatus. M. LeR. Munger, Pittsburgh, Pennsylvania, assignor to E. B. Sawyer, Lincoln, Nebraska.

1,312,157 Collapsible core for tire molds. C. F. Buente, Avalon, Pennsylvania.

1,312,364 Repair vulcanizer. C. A. Shaler, Waupun, Wisconsin.

1,312,438 Tire mold. H. H. Forrest, Kent, Ohio.

1,312,505 Apparatus and method for making tires from pulley band structure. E. Hopkinson, New York, N. Y.

1,312,627 Mold for tire liners. J. H. Grube, assignor to Airsafe Inner Tire Co., both of Los Angeles, California.

1,314,256 Apparatus for connecting and vulcanizing ends of tubes. W. C. Ehrenfeld, Flemington, New Jersey.

1,314,714 Device for curing and shaping tire patches. A. J. Stephens, Kansas City, Missouri.

1,314,733 Apparatus for rolling tire treads. F. B. Converse & J. L. Butter, Akron, Ohio, assignors to The B. F. Goodrich Co., New York, N. Y.

1,315,526 Tire strip reeling machines. De C. Neal, assignor to Morgan & Wright—both of Detroit, Mich.

1,315,603 Deflator for inner tubes. R. McClenathen, Cuyahoga Falls, Ohio, assignor to Kelly-Springfield Tire Co., New York.

1,315,981 Tire-making machine. F. C. Morton, New Haven, Conn.

1,316,272 Tire core of sheet metal and process of manufacture. D. A. Clark and C. E. Lowe, assignors to The Clyde E. Lowe Co., all of Cleveland.

1,316,273 Sheet metal tire core. D. A. Clark and C. E. Lowe, assignors to The Clyde E. Lowe Co., Cleveland, Ohio.

1,316,274 Mandrel for tires. D. A. Clark and C. E. Lowe, assignors to The Clyde E. Lowe Co., Cleveland, Ohio.

1,316,275 Mandrel for inner tubes. D. A. Clark and C. E. Lowe, assignors to The Clyde E. Lowe Co., Cleveland, Ohio.

1,316,276 Mandrel for inner tubes. D. A. Clark and C. E. Lowe, assignors to The Clyde E. Lowe Co., all of Cleveland, Ohio.

1,316,356 Tire building machine. F. B. Converse, Akron, Ohio, assignor to The B. F. Goodrich Co., New York, N. Y.

1,317,124 Tire vulcanizer. D. E. Booth, Tulsa, Oklahoma.

1,317,374 Device for maintaining tension in tire machines. C. Kuentzel, New York, N. Y., assignor to the Goodyear Tire & Rubber Co., Akron, Ohio.

1,317,526 Stand for finishing tires. A. J. Savage and H. I. Morris, assignors to the Savage Tire Co., all of San Diego, California.

1,317,657 Apparatus for manufacturing pneumatic tires. E. Hopkinson, New York, N. Y.

1,317,661 Two-part mold for tire vulcanizing. B. Darrow, assignor to the Goodyear Tire & Rubber Co., both of Akron, Ohio.

1,317,664 Apparatus and method for building up cord blankets for pneumatic tires. E. Nall, assignor to the Goodyear Tire & Rubber Co., both of Akron, Ohio.

1,317,669 Vulcanizer for cord tires. E. C. Templeton, assignor to the Goodyear Tire & Rubber Co., Akron, Ohio.

1,317,848 Press for retreading tires. J. J. Wohlgemuth, Chicago, Illinois.

1,317,849 Press for molding and vulcanizing tires. J. J. Wohlgemuth and L. L. Korach, Chicago, Illinois, said Korach assignor to said Wohlgemuth.

1,317,850 Tire mold. J. J. Wohlgemuth, Chicago, Illinois.

1,317,904 Tire mold. F. E. Anderson and D. S. Erickson, Osage, Kansas.

1,318,273 Apparatus for vulcanizing tires. F. D. Goodlake, Memphis, Tennessee.

1,318,383 Retreading apparatus. W. H. Hermsdorf, assignor to S. H. Goldberg—both of Chicago, Illinois.

1,318,530 Tire-retreading mold. J. Bjurstrom, St. Paul, Minnesota.

1,318,643 Apparatus and method for rolling tire bead cores. J. L. Butler, Akron, Ohio, assignor to The B. F. Goodrich Co., New York, N. Y.

1,319,088 Air-bag for tire repairing. A. L. Johnson, Worcester, Massachusetts.

1,319,287 Tool for trimming solid rubber tires. G. H. Johnson, Los Angeles, California.

1,319,301 Machine for slicing tread stock from tires. E. Nall, assignor to the Goodyear Tire & Rubber Co., both of Akron, O.

1,319,333 Stitching apparatus for tire-making machinery. W. B. Harsel, assignor to the Goodyear Tire & Rubber Co., both of Akron, Ohio.

1,319,644 Core for tires. G. H. Chinnock, New York, N. Y.

1,319,695 Machine for making cord tires. F. B. Converse, Akron, Ohio, assignor to The B. F. Goodrich Co., New York, N. Y.

1,319,770 Expansible core for vulcanizing tires. A. Hargraves, Akron, Ohio.

1,320,015 Sectional mold for tires. H. V. Lough, assignor to The Hartford Rubber Works Co., both of Hartford, Connecticut.

1,320,021 Machine for forming tire molds. W. A. S. Mauk, Baltimore, Maryland.

1,320,295 Machine for making tire carcasses. W. C. Tyler, Racine, Wisconsin, assignor to the Goodyear Tire & Rubber Co., Akron, Ohio.

1,320,319 Tire-building machine. J. J. Convery, New York, N. Y., assignor to Kelly-Springfield Tire Co., Akron, Ohio.

1,320,334 Machine for calendering vulcanite bases for solid rubber tires. C. Macbeth and H. Willshaw, Birmingham, assignors to the Dunlop Rubber Co., Limited, Westminster, London, both in England.

1,320,399 Tire mold. W. C. Lipe and A. G. Bolster, Syracuse, New York, assignors to the Fisk Rubber Co., Chicopee Falls, Massachusetts.

1,320,728 Tire-bead stripper. G. E. Blaylock, Baltimore, Maryland.

1,320,812 Vulcanizing apparatus for tires, with conveyor, etc. C. W. Wattleworth, assignor to the Goodyear Tire & Rubber Co., both in Akron, Ohio.

1,320,816 Collapsible core for tires. J. Yemiker, Akron, Ohio.

1,321,404 Ring core for building pneumatic cord tires with special cord arrangement. B. L. Stowe, Jersey City, New Jersey, assignor to Morgan & Wright, Detroit, Michigan.

1,321,493 Fabric-laying attachment for tire-making machines. J. E. Thropp, assignor to the De Laski & Thropp Circular Woven Tire Co., both of Trenton, New Jersey.

1,321,494 Fabric-laying attachment for tire-making machines. J. E. Thropp, assignor to The DeLaski & Thropp Circular Woven Tire Co., both of Trenton, New Jersey.

1,321,790 Fabric-stripping machine. C. D. Hibbs, Fort Worth, Texas.

1,321,961 Tire vulcanizer. H. K. Wheelock, assignor to Western Vulcanizer Manufacturing Co., a copartnership consisting of H. K. Wheelock, F. A. Weller, and W. R. Fontaine, all of Chicago, Illinois.

1,322,196 Device for inflating and indicating pressure in tires. O. H. Meyers, Dudley, Illinois.

1,322,944 Mandrel for tube winding. J. F. Pierce, Glynrich, assignor to American Vulcanized Fibre Co., both of Wilmington, Delaware.

1,323,164 and 1,323,165 Collapsible core and chuck for tires. P. and B. DeMattia, Clifton, New Jersey.

1,323,573 Repair vulcanizer. P. P. Bongie and E. Stephenson, assignors to Two Cure Retread Mold Co., all of Fort Worth, Texas.

1,323,606 Apparatus and process for impregnating and coating fabric. T. Midgley, Springfield, assignor to the Fisk Rubber Co., Chicopee Falls, both in Massachuetts.

1,324,016 Tire marker for tire-building machine. W. B. Harsel, assignor to the Goodyear Tire & Rubber Co., both of Akron, Ohio.

1,325,578 Bead-trimming machine. E. D. Putt, assignor to the Firestone Tire & Rubber Co., both of Akron, Ohio.

1,325,670 Collapsible sectional tire core. F. H. Grove, E. M. McCurry, and G. R. Bilger, assignors to The Banner Co., all of Columbiana, Ohio.

1,326,294 Apparatus for separating tires from cores. J. J. Shea, assignor to The Hartford Rubber Works Co., both of Hartford, Connecticut.

1,326,674 Tire core. E. Lookholter, Chicago, Illinois.

1,326,675 Tire core. E. Lookholter, Chicago, Illinois.

1,326,874 Apparatus for placing tires in molds. C. Macbeth and E. Sullivan, Birmingham, assignors to the Dunlop Rubber Co., Limited, Westminster, London, both in England.

1,327,264 Single tube pneumatic vulcanizing core. A. O. Alsten, Worcester, Massachusetts.

1,327,307 Tire-retreading apparatus. R. A. Brooks, Chicago, assignor to Western Rubber Co., Chicago, Ill.

1,327,393 Tire-fabric testing machine. A. E. Jury, Newark, New Jersey, assignor to the United States Tire Co., New York, N. Y.

1,327,802 Apparatus and method for manufacturing tires with a spheroidal depression in one surface. J. A. Bowerman, assignor to the Fisk Rubber Co., both in Chicopee Falls, Massachusetts.

1,327,841 Tire vulcanizer. F. B. Pfeiffer, Akron, Ohio.

1,327,904 Tire fabric impregnator. Wm. C. Carter, Radnor, Ohio.

1,327,910 Machine for making tires. W. B. Harsel, assignor to the Goodyear Tire & Rubber Co., both of Akron, Ohio.

1,328,330 Repair vulcanizer, F. G. Knoflicek, Silvis, Illinois.

1,328,676 Tire core. E. A. Krannich, Columbiana, assignor of ½ to L. A. Andregg, Mansfield, both in Ohio.

1,329,239 Device for peeling tires. E. P. Hafner and J. T. Roberts, both in St. Louis, Missouri.

1,329,849 Tire-trimming table. L. B. Pierson, assignor to the Fisk Rubber Co., both of Chicopee Falls, Massachusetts.

1,330,785 Mandrel for tire tubes. D. A. Clark and C. E. Lowe, assignors to The Republic Tool & Manufacturing Co., all of Cleveland, Ohio.

1,330,886 Apparatus for applying hard rubber to tire foundation bands. C. Macbeth and E. Sullivan, Birmingham, assignors to the Dunlop Rubber Co., Limited, Westminster, London, both in England.

1,330,958 Tire-retreading form and method of construction. W. J. Shriver, Milwaukee, Wisconsin, and C. K. Heasley, Chicago, Illinois.

1,331,146 Tire mold. E. W. Fothergill, assignor to Hartford Rubber Works Co., both of Hartford, Connecticut.

1,331,242 Tire-building machine. J. J. Convery, New York, N. Y., assignor to Kelly-Springfield Tire Co., Akron, Ohio.

1,331,657 Machine for making pneumatic tire covers, etc. C. Macbeth and C. K. Jones, Birmingham, assignors to the Dunlop Rubber Co., Limited, Westminster, London, both in England.

1,332,109 Tire-making machine. J. J. Convery, New York, N. Y., assignor to Kelly-Springfield Tire Co., Akron, Ohio.

1,332,329 Stock shell for winding tire fabrics. W. F. Gammeter, Cadiz, Ohio.

1,332,330 Tire-machine drum. W. F. Gammeter, Cadiz, Ohio.

1,332,608 Tire-building machine. J. J. Convery, New York, N. Y., assignor to Kelly-Springfield Tire Co., Akron, Ohio.

1,332,779 Apparatus and method for forming inner tubes for pneumatic tires. W. C. Tyler, Racine, Wisconsin, assignor to the Goodyear Tire & Rubber Co., Akron, Ohio.

1,332,812 Apparatus and method for removing tires from cores. R. B. Day, assignor to the Goodyear Tire & Rubber Co., both in Akron, Ohio.

1,332,990 Tire-bead cutting apparatus. G. McNeill, assignor to Morgan & Wright, both of Detroit, Michigan.

1,333,047 Die for making pneumatic tire treads. E. D. Valentine, Springfield, Ohio.

1,333,062 Vulcanizer for rebuilding tires. W. B. Coats, Faribault, Minnesota.

1,333,150 Tire-building buck. H. F. Bartlett, Muskegon, Michigan.

1,333,927 Tire-making machine. E. C. McGraw, assignor to the McGraw Tire & Rubber Co., both in East Palestine, Ohio.

1,334,185 Machine for making tire casings. W. C. Stevens, assignor to Firestone Tire & Rubber Co., both of Akron, Ohio.

1,334,629 Mold for tires. M. L. Munger, Lincoln, Nebraska.

1,335,101 Air-bag with removable outer surface layer, for vulcanizing pneumatic tires. F. Fenton, assignor to the Miller Rubber Co., both of Akron, Ohio.

1,335,150 Mold and process for making tires. P. I. Anderson, Des Moines, Iowa.

1,335,879 Apparatus and method for building pneumatic tires. B. Darrow, assignor to the Goodyear Tire & Rubber Co., both of Akron, Ohio.

1,336,328 Apparatus for wrapping and unwrapping tires. C. Zeigler, Barberton, Ohio.

1,336,329 Apparatus for wrapping and unwrapping tires. C. Zeigler, Barberton, Ohio.

1,337,707 Pneumatic air-bag core for use in repairing tires. A. L. Johnson and A. O. Alsten, assignors of 1-4 each to H. C. Goulding and J. A. Alsten—all of Worcester, Massachusetts.

1,337,910 Expansible core for tires. C. Holm, Bowman, North Dakota,

1,337,930 Mold for inner tubes. D. Lowe, Akron, Ohio.

1,338,233 Repair die for vulcanizing anti-skid tire treads. O. L. McCormick, Birmingham, Alabama.

1,338,407 Tire-building machine. E. G. Templeton, assignor to the Goodyear Tire & Rubber Co., both of Akron, Ohio.

1,338,569 Inner tube vulcanizer. E. D. Hostler, assignor of 1-2 to Hamiel & Mather, partners—all of Tipton, Iowa.

1,338,844 Device for stacking tire molds. B. H. Rose, Lakewood, Ohio.

1,339,451 Centering ring for tire beads. W. F. Goff, Akron, Ohio, assignor to The B. F. Goodrich Co., New York, N. Y.

1,339,815 Machine for sawing tire cores. J. C. Fiddyment, Akron, Ohio.

1,339,816 Machine for finishing tire molds. J. C. Fiddyment, Akron, Ohio.

1,340,440 Apparatus for treating tires during vulcanization. F. G. Flegal, assignor to the Salvage Tire Co., both of San Diego, California.

1,340,641 Repair vulcanizer. H. K. Wheelock, Los Angeles, California, assignor to Western Vulcanizer Manufacturing Co., a partnership, Chicago, Illinois.

1,340,642 Repair vulcanizer. H. K. Wheelock, Los Angeles, California, assignor to Western Vulcanizer Manufacturing Co., a partnership, Chicago, Illinois.

1,341,500 Tire-building stand. C. L. Durham, Salina, Kansas.

1,341,726 Tire-changing machine. I. A. Weaver and J. Sternaman, Jr., assignors to Weaver Manufacturing Co., all of Springfield, Illinois.

1,341,727 Tire changer. I. A. Weaver, assignor to Weaver Manufacturing Co., both of Springfield, Illinois.

1,341,728 Tire-changing appliance. I. A. Weaver and J. Sternaman, assignors to Weaver Manufacturing Co., all of Springfield, Illinois.

1,341,729 Tire-changing mechanism. I. A. Weaver, assignor to Weaver Manufacturing Co., both of Springfield, Illinois.

1,341,730 Tire-removing appliance. I. A. Weaver and J. Sternaman, assignors to Weaver Manufacturing Co., all of Springfield, Illinois.

1,343,460 Apparatus for opening tire molds, etc. Colin Macbeth, Birmingham, assignor to the Dunlop Rubber Co., Limited, Westminster, both in England.

1,343,504 Collapsible core for tires. A. H. Harris, Barberton, Ohio.

1,344,313 Expanding core for tires. O. A. Peterson and O. M. Brancel, Minneapolis, Minnesota.

1,344,702 Mandrel for making inner tubes for pneumatic tires. F. R. McCarty, Erie, Pennsylvania.

1,344,838 Tire-repair tool. C. Wieland, Yankton, South Dakota.

Reissue

14,879 Apparatus for manufacturing tires or inner liners. W. F. Ray, Chicago, Illinois. (Original No. 1,292,052, dated January 21, 1919.)

1,345,995 Apparatus for making pneumatic tire casings. F. B. Carlisle, Andover, Massachusetts, assignor to J. M. Gilbert, New York, N. Y.

1,346,158 Continuous tire-vulcanizing machine. T. F. Baily and F. T. Cope, Alliance, Ohio.

1,346,231 Tire core. T. Midgley, Sr., Columbus, and T. Midgley, Jr., Dayton, both in Ohio, assignors to the Fisk Rubber Co., Chicopee Falls, Massachusetts.

1,346,232 Overflow cavity for molds. T. Midgley, Springfield, assignor to the Fisk Rubber Co., Chicopee Falls, Massachusetts.

1,346,615 Tire vulcanizer. G. B. Cooper, Cleveland, Ohio.

1,346,947 Clamp for repairing tires. W. R. Fontaine, assignor to Western Vulcanizer Manufacturing Co., a copartnership consisting of H. K. Wheelock, F. A. Weller and W. B. Fontaine, Chicago, Illinois.

1,348,228 Apparatus and method for electrically vulcanizing tires. J. Ledwinka, assignor to Edward G. Budd Manufacturing Co., both of Philadelphia, Pennsylvania. (Renewed Jan. 8, 1920.)

1,348,596 Tire-building stand. E. Sterns, St. Louis, Missouri, assignor to Surety Tire & Rubber Co., a Delaware corporation.

1,348,612 Separable sectional core for tires. G. H. Willis, assignor to the Miller Rubber Co., both of Akron, Ohio.

1,349,039 Repair vulcanizer. A. A. Bitter, Los Angeles, California, assignor by mesne assignments to Western Vulcanizer Manufacturing Co., Chicago, Illinois.

1,349,366 Tire abrader. F. N. Cordell, St. Louis, Missouri.

1,349,390 Apparatus and process for the manufacture of tires. J. A. Swinehart, Akron, Ohio.

1,349,424 Apparatus for the manufacture of pneumatic-tire casings. E. Hopkinson, New York, N. Y.

1,349,688 Tire and tube vulcanizer. O. Nichols, Mound Valley, Kansas.

1,349,693 Repair vulcanizing apparatus. W. S. Robinett, Oakland, California.

1,349,721 Apparatus for use in vulcanizing pneumatic tire casings. E. Hopkinson, New York, N. Y.

1,350,117 Bead-forming ring for molding pneumatic tires. J. Schmidt, assignor by mesne assignments to Howe Rubber Corporation, both of New Brunswick, New Jersey.

1,350,696 Vulcanizing apparatus. O. F. Beck, Lawndale, and J. W. Speers and R. R. Jones, Akron, assignors to Firestone Tire & Rubber Co., Akron—all in Ohio.

1,351,156 Two-part mold for solid rubber tires. C. and A. E. Burnett, Trowbridge, England.

1,352,099 Machine and method for building tires. W. C. Stevens, assignor to Firestone Tire & Rubber Co., both of Akron, Ohio.

1,352,274 Collapsible tire core. F. L. Johnson, Akron, Ohio.

1,352,722 Apparatus for removing pneumatic tires from metal rims by fluid pressure. N. L. Caldwell, Knoxville, Tennessee.

1,353,042 Retread vulcanizer. E. Harris, Los Angeles, California.

1,353,158 Tire mandrel and method of production. J. R. Gammeter, Akron, Ohio, assignor to The B. F. Goodrich Co., New York, N. Y.

1,353,769 Apparatus for manufacturing solid rubber tires. B. Macbeth and W. E. Hardeman, Birmingham, assignors to the Dunlop Rubber Co., Limited, Westminster, London,—all in England.

1,353,933 Apparatus for laying or forming tire tread. H. I. Morris, assignor by direct and mesne assignments to Morris Tire Machinery Co., both of Los Angeles, California.

1,353,934 Apparatus and method for making rubber elements for tires, laminated tire treads, etc. H. I. Morris, assignor to Morris Tire Machinery Co., both in Los Angeles, California.

1,354,227 Tire mold. A. R. Thompson, Tacoma, Washington.

1,354,371 Apparatus and method for wrapping tires, etc. E. H. Angier Framingham, Massachusetts.

1,354,425 Apparatus for applying radial pressure to tires during vulcanization. T. Sloper, Devizes, England.

1,354,452 Mixing machine for rubber, etc. D. R. Bowen and C. F. Schnuck, assignors to Farrel Foundry & Machine Co., both of Ansonia, Connecticut.

1,354,459 Expansible core for tires. C. G. A. Backdahl, Stockholm, Sweden, assignor to United States Tire Co., New York, N. Y.

1,354,463 Slitting and rewinding machine. J. A. Cameron and G. B. Birch, assignors to Cameron Machine Co., all of Brooklyn, New York.

1,354,464 Slitting and rewinding machine. J. A. Cameron and G. B. Birch, assignors to Cameron Machine Co., all of Brooklyn, New York.

1,354,595 Tire-rebuilding device. E. Borman, Chicago, Illinois.

1,354,754 Pressure clamp for vulcanizing apparatus. S. B. Huey, deceased, by F. C. Berkhalter, administrator—both of Wichita, Kansas.

1,354,849 Tire-tread puller. J. Schmidt, Tracy, California.

1,355,104 Slitting and rewinding device. J. A. Cameron and G. B. Birch, assignors to Cameron Machine Co., all of Brooklyn, New York.

1,355,106 Winding mechanism. R. McC. Johnstone, Roselle Park, New Jersey, assignor to Cameron Machine Co., Brooklyn, New York.

1,355,305 Rubber mixing machine. D. R. Bowen and C. F. Schnuck, assignors to Farrel Foundry & Machine Co., all of Ansonia, Connecticut.

1,355,525 Apparatus and method for producing cord-tire carcass material in strip form. E. K. Baker, Chicago, Illinois.

1,355,734 Apparatus for manufacturing solid band tires. F. Cole, Leyland, England.

1,355,885 Rubber mixing machine. D. R. Bowen and C. F. Schnuck, assignors to Farrel Foundry & Machine Co., all of Ansonia, Connecticut.

1,356,173 Air-bag for inner tubes. C. L. Smith and E. S. Webster, assignors to Smith One Heat System, South Bend, Indiana.

1,356,485 Machine for cutting bias strips from tubular fabric. A. C. Bunker, Montclair, New Jersey.

1,356,596 Separable sectional tire core. J. W. Brundage, assignor to the Miller Rubber Co., both of Akron, Ohio.

1,356,597 Retreading vulcanizer. C. T. Byerley, Kansas City, Missouri.

1,356,691 Rubber mixing machine. D. R. Bowen and C. F. Schnuck, assignors to Farrel Foundry & Machine Co., all of Ansonia, Connecticut.

1,356,721 Collapsible tire core. F. L. Johnson, Akron, Ohio.

1,356,891 Apparatus for manufacturing solid tires. W. J. Steinle, Elmhurst Heights, New York, assignor to Morgan & Wright, Detroit, Michigan.

1,357,899 Tire-cutting machine. C. Rasmussen, assignor of 1-2 to R. T. Ingalls—both of Racine, Wisconsin.

1,357,967 Multiplex circular loom for weaving multiply tubular fabric. M. P. DuPray, Trenton, New Jersey.

1,358,094 Tire-fabric loom element. H. I. Morris, assignor to the Savage Tire Co., both of San Diego, California.

1,358,120 Mold for vulcanizing tires in repairing. C. L. Smith and E. S. Webster, assignors by mesne assignments to Smith One Heat System—all of South Bend, Indiana.

1,358,124 Apparatus and method for making rubber tubes. H. R. Stratford, Cleveland, Ohio.

1,358,729 Tipping form for tire repair. T. L. Harkins, Boston, Massachusetts.

1,358,770 Tire repair vulcanizing machine. A. W. Meyers, Milwaukee, Wisconsin.

1,358,820 Vulcanizing mold. A. J. Brown, Union, New Jersey, assignor to G. & J. Tire Co., Indianapolis, Indiana.

1,358,888 Tire retreading mold. J. H. Smith, San Francisco, California.

1,358,941 Collapsible tire core. H. A. Denmire, assignor of 1-2 to the General Tire & Rubber Co., both of Akron, Ohio.

1,359,487 Tire repair vulcanizing press. G. W. Bulley, St. Joseph, Michigan.

1,359,632 Machine for making cord tires. K. O. B. Textorius, New York, N. Y., assignor of 1-3 each to T. A. Liebler, Riverside, Connecticut, and Eli Cahn, New York, N. Y.

1,359,779 Device for making tires. P. I. Anderson, Des Moines, Iowa.

1,360,310 Apparatus for filling tires with resilient compound. Z. Olsson, Roomsboro, Georgia.

1,360,736 Clamp for tire cores. E. A. Ericson, Akron, Ohio.

1,360,962 Portable repair vulcanizer. W. Frost, assignor to Harvey Frost & Co., Limited, both in London, England.

1,360,982 Repair vulcanizing apparatus. H. R. Auld, assignor to T. L. Harkins—both of Boston, Massachusetts.

1,361,208 Inner tube mold having internal bulge around rim-forming portion to form annular recess at inner side of tube. N. G. Warth, assignor to the Climax Rubber Co., both of Columbus, Ohio.

1,361,827 Tire-casing curing rim. E. Cassel and F. H. Kunkel, Milwaukee, Wisconsin.

1,362,169 Collapsible core for tires. G. E. Eckler, Akron, Ohio.

1,362,169 Apparatus for molding and vulcanizing tires. C. Macbeth, Birmingham, assignor to the Dunlop Rubber Co., Limited, Regents Park, London—both in England.

1,362,189 Tire-vulcanizing apparatus. B. G. Rose, Lakewood, Ohio.

1,362,717 Attachment for tire and tube molds. J. A. McLane, assignor to the Armorcord Rubber Co., both of Morgantown, West Virginia.

1,362,729 Vulcanizing apparatus for tires. N. Y. Momitsa, Granite City, Illinois.

1,363,109 Segmental tire core. W. S. Gillette, Bay City, Texas.

1,363,150 Tire mold and clamp. J. H. Mulloy, assignor to Morgan & Wright—both of Detroit, Michigan.

1,363,163 Tire repair tool. C. Nickum, Zion, Illinois.

1,363,462 Beveling device for rubber tubes. A. E. Falor and F. J. MacDonald, Akron, Ohio, assignors to The B. F. Goodrich Co., New York, N. Y.

1,363,802 Core stripper for pneumatic tires. W. H. Metzler, assignor to the Goodyear Tire & Rubber Co., both of Akron, Ohio.

1,364,133 Tube-splice vulcanizer. C. E. Miller, Anderson, Indiana.

1,364,183 Take-off mechanism for rubber mixing mills. S. Deitrich, Cudahy, Wisconsin.

1,364,241 Mold for tire treads. G. W. Brownell, Leominster, Massachusetts.

1,364,362 Pneumatic-pad tube-splicing apparatus. E. Fetter, assignor by mesne assignments to the Pneumatic Tube Steam Splicer Co., both of Baltimore, Maryland.

1,364,386 Tire-making machine. C. Kuentzel, assignor to the Akron Rubber Mold & Machine Co., both of Akron, Ohio.

1,364,985 Inner tube connector and vulcanizer. W. C. Ehrenfeld, Flemington, New Jersey.

1,365,066 Machine for wrapping and unwrapping tires. E. E. Shoopman, Cairo, Nebraska.

1,365,104 Expansible core for curing tires. A. Huetter, Dayton, assignor to the Firestone Tire & Rubber Co., Akron, Ohio.

1,365,294 Tire mold. G. E. Tiller, Sioux City, Iowa.

1,365,365 Tube-repairer vulcanizer. J. W. Arthur, assignor to the Williams Foundry & Machine Co., Akron, Ohio.

1,365,581 Apparatus for cleaning inside of tire casings. H. G. Ballou, Los Angeles, California.

1,365,709 Collapsible core for tires. E. M. McCurry and C. R. Bilger, assignors to the Banner Machine Co., Columbiana, Ohio.

1,365,764 Apparatus for removing flexible rubber articles from forms or cores. J. W. Brundage, assignor to the Miller Rubber Co., all of Akron, Ohio.

1,366,290 Tire-mold core. F. Smith and T. H. Brittain, both of Akron, Ohio.

1,366,547 Apparatus for wrapping tires with paper. W. M. Wheildon, Ashland, and Edward H. Angier, Framingham, both in Massachusetts, said Wheildon assignor to said Angier.

1,366,750 Tire-mold core. F. Smith and T. H. Brittain, both of Akron, Ohio.

1,367,626 Tire-repairing apparatus. J. Reinhardt, Norman, Oklahoma.

1,368,478 Adjustable section and retread mold for pneumatic tires. R. A. Brooks, assignor by mesne assignments to Western Rubber Mold Co., both of Chicago, Illinois.

1,368,527 Core for pneumatic tires. F. Paulsen, Kansas City, Missouri.

1,368,631 Expansible core for vehicle tires. A. Huetter, Dayton, Ohio.

1,368,641 Tire mold. T. Midgley, Springfield, assignor to the Fisk Rubber Co., Chicopee Falls, both in Massachusetts.

1,368,679 Tire vulcanizer. A. Adamson, Akron, Ohio.

1,368,862 Collapsible tire core. J. Traum, Coshocton, Ohio.

1,368,929 Tire-building machine, with vertical adjustment. W. H. Hermann, Lancaster, assignor to the Herman Tire Building Machine Co., Columbus, both in Ohio.

1,369,695 Apparatus and method for manufacturing cushion units for cushion wheels. J. J. Morand, assignor to Morand Cushion Wheel Co., both of Chicago, Illinois.

1,369,715 Tire-wrapping machine. C. Spreckels, San Diego, California.

1,369,826 Machine for manufacturing cord binding. F. J. MacDonald assignor to the Firestone Tire & Rubber Co., both of Akron, Ohio.

1,370,100 Tire band making machine. J. L. G. Dykes, Chicago, Illinois, assignor to E. Hopkinson, New York, N. Y.

1,370,101 Tire band stretching machine. J. L. G. Dykes, Chicago, Illinois, assignor to E. Hopkinson, New York, N. Y.

1,370,102 Tire band stretching and vulcanizing machine. J. L. G. Dykes, Chicago, Illinois, assignor to E. Hopkinson, New York, N. Y.

1,370,268 Stock winding device for calenders. H. B. Batchelder, Springfield, assignor to the Fisk Rubber Co., Chicopee Falls, both of Massachusetts.

1,370,911 Apparatus for covering tire beads. E. D. Putt, assignor to the Firestone Tire & Rubber Co., both in Akron, Ohio.

1,371,779 Tire-repair mold for pneumatics. John Flynn, assignor to the Williams Foundry & Machine Co., both of Akron, Ohio.

1,372,215 Mold for curing and forming blow-out patches. C. M. Anderson, Batavia, Illinois.

1,372,545 Apparatus for pulling tire fabric plies or the like. J. A. Purvis and H. A. Sessions, both of Traverse City, Michigan.

1,372,567 Method of manufacturing the covers of pneumatic tires. T. Sloper, Devizes, England.

1,372,660 Tire-mounting device. J. Hoffer, Carlisle, Washington.

1,372,799 Tire repair vulcanizing device. J. J. Cotter, Philadelphia, Pennsylvania.

1,373,212 Fabric cutting and winding apparatus. W. C. Tyler, Racine, Wisconsin, and A. H. Koza, Akron, Ohio, assignors to the Goodyear Tire & Rubber Co., Akron, Ohio.

1,373,228 Expansible collapsible tire core. W. G. Fording, Cleveland, Ohio.

1,373,229 Expansible and collapsible tire core. W. G. Fording, Lakewood, Ohio.

1,373,389 Tire mold. G. H. Witsaman, assignor of one-half to W. B. Ruston, both of Dayton, Ohio.

1,373,807 Tire-repair vulcanizer. O. M. Fredd, Hancock, Michigan.

1,374,449 Tire-stitcher and mounting. W. B. Harsel, assignor to the Goodyear Tire & Rubber Co., both of Akron, Ohio.

1,374,584 Apparatus for making inner tubes. H. C. Knecht, Akron, Ohio.

1,374,805 Mold and process for rebuilding tires. H. G. Ballou, Los Angeles, California.

1,375,214 Expansible core and tire mold. B. Darrow, assignor to the Goodyear Tire & Rubber Co., both of Akron, Ohio.

1,375,468 Apparatus and method for treating selvage. M. A. Replogle, assignor to the Goodyear Tire & Rubber Co.—both of Akron, Ohio.

1,375,528 Apparatus and method for tire retreading. J. H. Miller, San Luis Obispo, California.

1,375,542 Equipment for vulcanizing tire casings. J. Traum, Coshocton, Ohio.

1,375,543 Tire mold. E. H. Trump, Barberton, Ohio.

1,375,660 Interlocking tire mold. K. B. Kilborn, assignor to the Goodyear Tire & Rubber Co., both of Akron, Ohio.

1,376,123 Apparatus for molding tires. C. W. Stickel, Rochester, assignor to Good Luck Tire & Rubber Co., Buffalo, both in New York.

1,376,149 Tire-repair vulcanizer. F. O. Melin, assignor of one-half to L. H. Peterson, both of Omaha, Nebraska.

1,376,196 Tire-repair vulcanizing mold. O. M. Fredd, Hancock, Michigan.

THE UNITED KINGDOM

2,028	1881	Machine for waterproofing threads or twine. G. & W. H. Good.
1,268	1890	India rubber, vulcanizing. A. I. Rath, Imperial Rubber Works, Hyde, Cheshire.
16,636	1890	India rubber, vulcanizing. Joseph K. Heywood, Clayton, near Manchester.
10,171	1892	India rubber vulcanizing. Harry Herbert Waddington, Spring Bank Mills, Hyde.
496,321	1893	Mandrel for pneumatic tires. Fred W. Morgan and Rufus Wright, Chicago, Illinois, U. S. A.
543,093	1895	Mandrel for forming pneumatic tires. William Holmes, assignor to Fred W. Morgan and Rufus Wright, all of Chicago, Illinois, U. S. A.

543,792	1895	Machine for perforating hollow or pneumatic tires. Rufus Wright and John E. Parker, assigners to Morgan & Wright, all of Chicago, Illinois, U. S. A.
2,831	1896	Cutting India rubber. H. Jelly and C. Hubbard.
26,190	1896	Removable core for tires. D. Young.
553,212	1896	Art of forming tires or other tubes and molds for use therein. Joseph G. Moomy, assignor to Mary H. Moomy, both of Erie, Pennsylvania, and the Combination Roll & Rubber Co., Bloomfield, New Jersey, U. S. A.
557,033	1896	Apparatus for manufacturing pneumatic tires. Joseph Sherbondy, assignor to the Diamond Rubber Co., both of Akron, Ohio, U. S. A.
560,123	1896	Method of and apparatus for making tire covers for velocipedes. Henry J. Doughty, Providence, Rhode Island, U. S. A.
567,457	1896	Method of and apparatus for making pneumatic tires. H. J. Doughty, Providence, Rhode Island, U. S. A.
583,428	1897	Apparatus for manufacturing pneumatic tires. Robert Cowen, Cambridge, Massachusetts, assignor to the Boston Woven Hose & Rubber Co., Boston, Massachusetts, U. S. A.
3,776	1898	Flexible tubing. James Bennet Forsyth, Boston, Massachusetts, U. S. A.
5,470	1898	Vulcanizing apparatus. Henry J. Doughty, Providence, Rhode Island, U. S. A.
27,486	1898	Vehicle wheels. W. Swain and L. H. Swain, both of 177 Belmont Road, Astley Bridge, Bolton, Lancashire.
598,919	1898	Endless tubing and art of and apparatus for making it. James Bennet Forsyth, Boston, Massachusetts, U. S. A.
601,834	1898	Machine for making vehicle tires. Frederick W. Huestis, assignor to the Consolidated Rubber Works, both of Boston, Massachusetts, U. S. A.
9,900	1899	Pneumatic tires. Christian Hamilton Gray, the India Rubber, Gutta Percha & Telegraph Works Co., Limited, Silvertown, Essex.
20,951 20,952 20,953	1899	Pneumatic tires. Moreland Nicholl Dessau, Tooting, Surrey and the Wapshare Tube Co., Limited, London.

617,414	1899	Vulcanizing apparatus. Henry J. Doughty, Providence, Rhode Island, U. S. A.
627,230	1899	Apparatus for making hollow rubber tires. Walter B. Hardy, Akron, Ohio, U. S. A.
639,949	1899	Machine for manufacturing inflatable tires. Walter Swain and Leonard H. Swain, Bolton, England.
3,851	1900	Improved cord-laying machine. W. Swain.
4,834	1900	Cutting and cementing India rubber. Valentine Pfister.
9,167	1900	India rubber, vulcanizing. Henry J. Doughty, Providence, Rhode Island, U. S. A.
15,471	1900	Pneumatic tires. Christian Hamilton Gray, the India Rubber, Gutta Percha & Telegraph Works Co., Limited, Silvertown, England.
641,337	1900	Process of manufacturing pneumatic tires. Frank A. Seiberling, Akron, Ohio, U. S. A.
652,813	1900	Multiple press vulcanizer. F. A. Seiberling, Akron, Ohio, U. S. A.
653,828	1900	Machine for cutting sheets of unvulcanized rubber. Arthur Sweeney, Providence, Rhode Island, U. S. A.
659,730	1900	Air extractor for pneumatic tires in construction. Augustus E. Ellinwood, assignor to the Goodyear Tire & Rubber Co., both of Akron, Ohio, U. S. A.
9,805	1902	Vulcanizing mold. L. E. Bert.
14,122	1902	Thread-coating apparatus. O. B. Reichelt, M. A. Helbing and G. R. G. Nienaber.
10,941	1903	Rubber cords. C. H. Gray, The India Rubber, Gutta Percha & Telegraph Works, Silvertown, Essex, and T. Sloper, Brittox, Devizes.
10,942	1903	Pneumatic tires, etc. C. H. Gray, The India Rubber, Gutta Percha & Telegraph Works Co., Silvertown, Essex, and T. Sloper, 14 Brittox, Devizes.
10,943	1903	Vehicle wheels. C. H. Gray, The India Rubber, Gutta Percha & Telegraph Works Co., Silvertown, Essex, and T. Sloper, 14 Brittox, Devizes, Wiltshire.
11,207	1903	Molding wheel tires. W. P. Thompson, Liverpool.
11,651	1903	Machine for flattening rubber covered cord. C. H. Gray and T. Sloper.
12,847	1903	Vehicle Wheels. L. Johnston, Manchester, England.
745,300	1903	Machine for making pneumatic tires. Uzziel P. Smith, Chicago, Illinois, U. S. A.

758,863	1904	Compound hydraulic vulcanizing press. E. C. Shaw, assignor to The B. F. Goodrich Co., both of Akron, Ohio, U. S. A.
758,865	1904	Apparatus for preparing, handling and vulcanizing tires or other rubber products. E. C. Shaw, assignor to The B. F. Goodrich Co., both of Akron, Ohio. U. S. A.
6,641	1905	Molding tires. A. E. Vincent, Noisy-le-Sec, Seine, France.
20,849	1905	Mandrel for joining the ends of pneumatic tire tubes. C. Lee and County Chemical Co., both in Birmingham.
22,153	1905	Vulcanizer for tire repairs. C. W. T. Lessen, Kingsbury, Warwickshire.
23,590	1905	Machine for making tire fabric. T. & R. Sloper, Devizes, Wiltshire.
24,346	1905	Portable vulcanizer. H. H. Frost, London.
3,221	1906	Expanding mandrel for joining tire and other tubes. W. H. Welch & Harvey Frost & Co., London.
4,062	1906	Vehicle wheels. J. Hubbard, 16 Alloa Road, Goodmayes, Ilford, Essex.
7,066	1906	Electrically heated portable tire vulcanizer. W. H. Welch & H. Frost & Co., London.
8,817	1906	Tire vulcanizer in sections. H. E. Poultney, Houdsworth, Staffordshire.
8,976	1906	Mold for tires. R. Ramsbottom, J. W. Turner and A. Buxton, Manchester.
13,493	1906	Apparatus for the steam vulcanization of tire covers. E. Hopkinson, New York, and T. Midgley, Hartford, Connecticut, U. S. A.
15,040	(a) 1906	Puncture repair press. D. W. Freeman, Finningley, & W. Pennington, Bawtry, both in Yorkshire.
15,499	1906	Tire repair vulcanizer—electric heated. L. Binko & Phoenix Electric Heating Co., London.
16,030	1906	Mold for tires. W. H. Cox, Eccles.
16,560	1906	Molding tire covers. J. S. Stocks, Chapeltown, Leeds, and G. W. Bell Fulstone, Mile End Lane, Stockport.
18,587	1906	Making pneumatic tire covers. New Eccles Rubber Works and George J. Eccles, Eccles, near Manchester.
20,161	1906	Puncture-repair device for tires. G. Gordon & W. Berry, Blackpool.

21,427	1906	Mold for forming tire fabrics. P. M. C. Nobet, La Grave par Luxe. (Charente) France.
21,447	1906	Vulcanizer for tire repairing. C. A. Shaler, Waupun, Wisconsin, U. S. A.
25,000	1906	Former for making pneumatic tires. T. Sloper, Devizes, Wiltshire.
25,099	1906	Vehicle wheels. T. Sloper, Southgate Villa, Devizes, Wiltshire.
29,177	1906	Tire puncture closing device. A. J. Maffemiabes, London.
29,426	1906	Vulcanizing apparatus for pneumatic tires. T. Midgley, Hartford, Connecticut, U. S. A.
671	1907	Tire-forming shoe. A. E. Vincent, Noisy-le-Sec, Seine, France.
1,207	1907	Building wheels, tires, pneumatics. C. Hubbard, Heaton Moor, Lancashire, and Macintosh & Co., Manchester.
1,208	1907	Molding tires. C. Hubbard, Heaton Moor, Lancashire, and Macintosh & Co., Manchester.
2,728	1907	Cementing India rubber. New Eccles Rubber Works and John George, both of Eccles, Manchester.
3,251	1907	Mandrel or mold for vulcanizing repair tubes or covers. W. Frost & H. Harvey Frost & Co., London.
11,900	1907	Portable vulcanizer for tires. E. Auselmi, Viterbo, Italy.
14,785	1907	Vulcanizer for tire tubes and covers. R. Davis Biddulph.
18,646	1907	Pneumatic tires. C. G. Hawley and E. K. Baker, Chicago, Illinois, U. S. A.
19,907	1907	Electrically heated vulcanizer, particularly for tires. J. Hay and two others, Johnston, Renfrewshire.
20,893	1907	Portable vulcanizer for pneumatic tire repairs. F. Grover, E. Cornock & Forgrove Machinery Co., Leeds.
21,332	1907	Apparatus for vulcanizing tires and tire tubes heated electrically. W. H. Welch & H. Frost & Co., London.
23,621	1907	Vulcanizer for tire repairs. W. Frost & H. Frost & Co., London.
25,621	1907	Machine for winding insulated thread to form tire casings. E. D. E. Bayne & L. A. Subers, Cleveland, Ohio, U. S. A.

261	1908	Hollow rubber articles. F. J. Gleason, Walpole, Massachusetts, U. S. A.
2,381	1908	Electric vulcanizer for tires. W. Frost & H. Frost & Co., London.
6,327	1908	Clamps and expanding mandrel for use in repair and manufacture of rubber tires. R. Davis, Riddulph, near Congleton.
11,199	1908	Mold for tires. R. & C. H. Wallwork, Manchester.
18,301	1908	Device for setting wire cored rubber tires.
19,220	1908	Puncture closing device for tires, air cushions and the like. J. Roberts & J. Prescott, Liverpool.
20,027	1908	New or improved method of and means for manufacturing tires for vehicles or for analogous purposes. G. C. Taylor, "Ravenscar," Helsby, Cheshire.
24,464	1908	Pneumatic tires. W. H. Paull, Birmingham.
25,250	1908	Press for molding rubber tires or tubes. J. C. Kay & Co. & J. H. Coffey, both of Bury, Lancashire.
26,304	1908	Molding tires, etc. G. C. Taylor, "Ravenscar," Helsby, Cheshire.
8,313	1909	Pneumatic closing device for tires. C. L. Baldwin, New York City.
12,031	1909	Mechanism for use in making pneumatic tires. T. Sloper, Devizes, Wiltshire.
12,041	1909	Puncture closer for tires. R. Sampson, Montreal, Canada.
13,837	1909	Vulcanizing mold for tires. J. K. Williams, Akron, Ohio, U. S. A.
22,217	1909	Mold for tires. C. M. Gautier, London.
22,543	1909	Tire repairing device. C. Ogden, Salford, England.
24,956	1909	Vehicle wheels; ratchet gearing. C. M. Gautier, Putney, London.
25,029	1909	Molding tires. A. Olier, Clermont-Farrand, Puy de Dome, France.
25,588	1909	Vehicle wheels. W. C. Stevens, Akron, Ohio, U. S. A.
26,671	1909	Tire-cleaning device. A. N. Davis, Southsea Hants.
7,158	1910	Rubber core for tires. R. K. Evans, London.
9,430	1910	Molding wheel tires. A. C. Squires, Akron, Ohio, U. S. A.
9,471	1910	Machines for manufacturing tire covers. C. Roussillon, Suresnes, Seine, France.

9,728	1910	Rubber tires expanded in molds. W. T. Clifford, Barnes, London.
10,044	1910	Apparatus for building and repairing tires. R. Fiedler, Berlin.
10,645	1910	Rubber cords. T. Sloper, Southgate Villa, Devizes, Wiltshire.
11,299	1910	Keeping cores of pneumatic tires in position. A. J. McKinney, Highgate, London.
11,605	1910	Apparatus for making elastic tires and covers. A. von Bucovich, Vienna, Austria.
1,882	1911	Pneumatic tires, weaving. H. W. Lake, 7 Southampton Bldg., London.
16,605	1911	Winding machine for pneumatic tires. A. Olier & Co., Usines St. Remy, Clermont-Ferrand, France.
16,940	1911	Winding and unwinding machine for pneumatic tires. A. Olier & Co., and André Olier, Usines St. Remy, Clermont-Ferrand. France.
19,881	1911	Portable vulcanizer. Rde. C. de Peruzzio, Roosendael, Holland.
20,838	1911	Tools for repairing tires. A. Kendrick, Hooten.
21,919	1911	Tire-repair appliance. A. S. Bowley, 40 Werter Road, Putney, London.
22,396	1911	Apparatus for closing punctures. F. T. Porter, 18 Larkhall Rise, Chapham, London.
23,738	1911	Tire-repair outfits. M. J. Schulte, Hillcrest, Kenilworth, Warwickshire.
24,758	1911	Closing punctures in tires. F. H. Michelson, E. W. and H. P. Hudd, Burnet St., Hatfield, Pretoria, Transvaal.
25,637	1911	Making pneumatic tires, etc. F. H. Rushton, 158 Grimsby Road, New Cluthropes, Lincolnshire.
26,016	1911	Making pneumatic tires. P. A. Newton, 6 Breams Bldg., Chancery Lane, London.
28,378	1911	Tire vulcanizers. E. C. R. Marks, 57 Lincolns Inn Fields, London.
29,265	1911	Vulcanizer for repairing tires. C. F. Adamson, Akron, Ohio, U. S. A.
2,297	1912	Making wheel tires. Robert Bridge, Castleton Ironworks, Castleton, Lancashire.
3,145	1912	Tire puncture closing apparatus. R. Haddan, 31 Bedford Street, Strand, London.

3,755	1912	Puncture closing apparatus. J. Eilers and J. Hinrichs, 9 Milchstrasse, Oldenburg, Grand Duchy of Oldenburg, Germany.
4,287	1912	Molding tires. A. Adamson, Akron, Ohio, U. S. A.
4,291	1912	Puncture closing apparatus. T. C. Dubbins, 211 West 32d Street, Los Angeles, California, U. S. A.
5,019	1912	Covering cores by winding. J. Bane, 9 Second Avenue, Manor Park and L. Meredith, 99 Elgin Avenue, both in London.
5,535	1912	Tire-building machine. P. A. Newton, 6 Breams Bldgs., Chancery Lane, London.
10,634	1912	Tire vulcanizers. A. Olier & Co., St. Remy Clermond-Ferrand, Puy-de-Dome, France.
10,914	1912	Apparatus for detaching and closing punctures in tires. F. Humphris, Barton, Peveril, Eastleigh, Hampshire, England.
11,233	1912	Apparatus for detecting and closing punctures in tires. E. W. A. Martin, 98 Herbert Road, Plumstead, London.
11,329	1912	Thread coating. R. Latour and A. Cappelle, 157 Chaussée d'Ypres, Menin, Belgium.
11,746	1912	Vehicle wheels; building wheels. Atlas Non-Puncture Inner Case Syndicate, Kensington, London.
12,274	1912	Molding wheel tires. N. W. McLeod, 207 N. 8th Street, St. Louis, Missouri, U. S. A.
12,543	1912	Vulcanizing tires. N. A. Dees, 3127 Locust Street, and N. W. McLeod, 207 North Eighth Street, St. Louis, Missouri, U. S. A.
13,638	1912.	Making solid rubber tires. R. Bridge and J. Bridge, Castleton Iron Works, England.
13,687	1912	Apparatus for detecting and closing tire punctures. H. W. Lake, 7 Southampton Buildings, London.
13,833	1912	Apparatus for detecting punctures in pneumatic tires. J. T. McGuire, 69 Northcote Street, Arthur's Hill, New Castle-on-Tyne.
14,012	1912	Tire vulcanizer. Dunlop Rubber Co. and J. V. Worthington, Manor Mills, Salford St., Aston, Birmingham.
15,835	1912	Closing tire punctures. F. H. Hall, Gannaway Gate, Norton, Lindsey, Warwickshire.

16,930	1912	Tire-wrapping machine. J. Liddle, 154 St. Vincent St., Glasgow.
17,586	1912	Vulcanizing tires. A. W. Gislow, Gislared, Sweden.
17,689	1912	Locating punctures in tires. B. G. Burchell, 10 Dalkeith Place, Kettering.
19,034	1912	Making covers for pneumatic tires. J. W. H. Dew, 9 Laurence-Poutney Hill, Cannon St., London, and D. Bridge & Co., Castleton Iron Works, Castleton, Lancashire.
19,094	1912	Molding wheel tires. M. C. Overman, 250 West 54th St., New York, N. Y., U. S. A.
23,226	1912	Vulcanizing tires. W. Gummer, 29 Alina Square, St. John's Wood, London.
23,451	1912	Vulcanizing apparatus for tires and such articles. H. R. Nash, High Bank, Church Street, Altrichane, Cheshire.
24,064	1912	Expansible mandrel for use with pneumatic tires when vulcanizing. William Gummer, St. John's Wood, N. W., London.
1,579	1913	Tire Vulcanizers. B. Kisshazy, Miskoloz, Hungary.
1,976	1913	Machine for making pneumatic tire covers. A. Neathern, Zollikon, Switzerland.
2,817	1913	Apparatus for detecting and closing punctures in pneumatic tires. R. W. Sampson, 353, Olivier avenue, Westmount, Quebec, Canada.
4,287	June 11, 1913.	Molding wheel tires. Alexander Adamson, Akron, Ohio, U. S. A.
6,810	1913.	Machine for studding tire treads, Dunlop Rubber Co., and D. G. Snodgrass, Manor Mills, Salford Street, Aston, Birmingham, and W. A. Turpin, Warple Way, Aston Vale, London.
7,452	1913.	Apparatus for detecting and closing punctures. F. Siegenthaler, 107 Moore Park Road, Fulham, London.
8,061	1913	Tire-wrapping machine. T. E. Robertson, 104 Victoria Street, Westminster.
11,731	1913	Machine for making tire fabric. J. W. H. Dew, 8 Laurence Pountney Hill, Cannon Street, London.
22,810	1913	Mold for molding and vulcanizing tires. J. Schionning, 45 Hejurdalsgade, Copenhagen, Denmark.

25,770	1913	Machine for making rubber tubes for wheel tires. F. W. Kremer, 32 Central Ave., Carlstadt, New Jersey, U. S. A.
27,118	1913	Special apparatus for making tire covers. J. M. O'Brien, 10 Rydal Road, Streatham, London.
28,784	1913	Improvements in wrapping machinery used in the manufacture of pneumatic tires. James Henry Nuttall and David Bridge & Co., Limited, both of Castleton Iron Works, Castleton, Lancashire.
2,498	1914.	Molding rubber tires. T. Sloper, Southgate, Devizes, Wiltshire.
3.584	1914	Wheel tires, W. C. Stevens, Akron, Ohio, U. S. A.
4,283	1914	Tire vulcanizer. H. C. Reading & Co., Burton Motor Garage, High Street, and G. E. Sutton, 88 Belvidere Road—both of Burton-on-Trent.
4,313	1914	Tire vulcanizer. W. H. Miles, Woolpack Hotel, Langton, Staffordshire.
5,129	1914	Apparatus for closing tire punctures. W. G. Windham, 30 Evelyn Gardens, London.
7,226	1914	Braiding Machine. W. H. Dunkerly and T. J. Arnold, Paterson, New Jersey, U. S. A.
8,121	1914	Winding strip rubber for making elastic tires. F. E. Blaisdell, Westminster.
10,214	1914	Making wheel tires. Dunlop Rubber Co., Westminster, and F. J. Keegan, Coventry.
11,732	1914	Tire covers. Dunlop Rubber Co., Westminster, and Colin Macbeth, Aston, Birmingham.
12,630	1914.	Cord making apparatus. J. D. Tew, Akron, Ohio, U. S. A.
13,348	1914	Electric vulcanizer for tires, hose and insulated wire. W. T. Henley's Telegraph Works Co., 13 Bloomfield St., London Wall and H. Savage, 77 Westcombe Park Road, Blackheath—both in London.
13,357	1914	Tire-making machine. C. F. Morton, Cambridge, Massachusetts, U. S. A.
13.571	1914	Solid tire molds. A. Cockburn, 10 Merchiston Park, Edinburgh.
14,994	1914	Tire-building machine. F. C. Morton, 73 Dana Street, Cambridge, Massachusetts, U. S. A.

15,500	1914	Tire-making and vulcanizing press. H. J. Doughty, Edgewood, Rhode Island, U. S. A. .
19,026	1914	Tire tensioning device. S. G. S. Dicker, 20 Holborn, London, (Miller Rubber Co., Akron, Ohio, U. S. A.)
19,509	1914	Tire-wrapping machine. H. J. Doughty, Edgewood, Rhode Island, U. S. A.
23,590	1914	Molding tires. W. Reid, Albert Drive Pollokshields and J. Stungo, 157 St. Vincent Street, both in Glasgow.
978	1915	Ramless press vulcanizer. J. H. Nuttall and David Bridge & Co., Castleton, Manchester, England.
2,568	1915	Cord fabric spreader. E. Burdin, 71 Rue Ney, Lyons, France.
3,727	1915	Paper wrapping machine for tires. L. W. Zoold, 5 Corporation Street, Birmingham (Pierce Wrapping Machine Co., Chicago, Illinois, U. S. A.)
5,931	1915	Pneumatic tire-building machine. Goodyear Tire & Rubber Co., Akron, Ohio, U. S. A.
5,932	1915	Pneumatic tire-building machine. Goodyear Tire & Rubber Co., Akron, Ohio, U. S. A.
6,413	1915	Apparatus for molding and vulcanizing tire covers. Dunlop Rubber Co., 14 Regent Street, Westminster, and C. Macbeth, Manor Mills, Salford Street, Aston, Birmingham.
8,075	1915	Pneumatic tire mold. F. A. Byrne, 2 Ludgate Hill, Birmingham.
8,524	1915	Electric repair vulcanizers. O. C. Demais, Cuylen Avenue, Chicago, Illinois, U. S. A.
9,454	1915	Pneumatic tire mold with expansible ring. F. A. Byrne, 2 Ludgate Hill, Birmingham.
11,729	1915	Elastic tires and apparatus for making. E. A. Muskett and Rubberine, Limited, Campshourne Works, High Street, Hornsey, London.
12,128	1915	Tire tread vulcanizer. E. Nall, Akron, Ohio, U. S. A.
12,356	1915	Sectional core for tire molds. J. H. Coffey and J. H. Coffey, 73 Jameson Ave., Toronto, Ontario, Canada.
15,508	1915	Repair vulcanizer. G. Guattieri & L. Cavalletti, Via Nazionale, Rome.
21,493	1916	Mold for tire tread. W. Clark, London. (Louis Peter, Frankfort o/M. Germany.)

22,995 1916 Expanding tire liner mold. Thomas Sloper, Southgate, Devizes, Wiltshire, England.

100,209 1916 Tire-building machine. Goodyear Tire & Rubber Co., 1144 East Market Street, Akron, Ohio, U. S. A.

100,397 1916 Manufacture of pneumatic tires. A. H. Harris, Youngstown, Ohio, U. S. A.

108,724 1917 Tire-building machine. W. & A. Bates, Limited, and John Healy, Leicester, England.

116,774 1918 India rubber. Wood-Milne, Limited, Ribble Bank Mills, Preston, and W. Ford, Leyland, Lancashire.

9,321 Molding tires. Margetts International Sectional Tire Co., 56 Moorgate St., and A. J. M. Smith, Venner Villa, Venner Road, Sydenham—both in London.

18,234 Vulcanizing solid tires to metal bands. J. Reuse and C. Reuse, Quai an Charbon, Hal, Belgium.

20,668 Spanner for stretching or opening punctures in pneumatic tires. H. S. Ballance, Weston-super-Mare.

24,064 Vulcanizing tires. W. Gummer, 29 Alina Square, St. John's Woods, London.

24,738 Molding rubber tires. G. J. Owens, 15 Montpelier, Edinburgh.

100,828 Tire-building fabric stretching machine. W. J. Mellersh-Jackson, 28 Southampton Building, London, (Hartford Rubber Works, Hartford, Connecticut, U. S. A.)

105,426 Solid tire tubing machine. F. W. East, 1 Llanheris Villas, Tennyson Road, and A. G. East, Hugo Villa, Carlton Road, both in Harpenden, Herlfordshire.

107,701 Solid tire mold. W. & A. Bates and J. Healy—both of St. Mary's Mills, Leicester.

108,577 Feeding device for bias cutting machine. J. H. Nuttall and D. Bridge & Co., both of Castleton Iron Works, Castleton.

108,965 Machine for applying rubber stock in manufacture of tires or rubber covered rolls. C. F. Davis, Beuledi Pier Road, Northfleet, Kent.

109,048 Machine for stripping clincher tires from cores. Firestone Tire & Rubber Co., assignees of W. C. Stevens, both of Akron, Ohio, U. S. A.

109,624 Molding wheel tires. Michelin et Cie (Soc. en Commandite par actions) Clermont-Ferrand, France, assignees of J. H. Michelin, New Brunswick, New Jersey, U. S. A.

110,243 Tire-making machine. F. H. Mercer, H. F. H. Blease, and Avon Indian Rubber Co., all of Melksham, Wiltshire.

110,955 Composite cores or formers for expanding or shaping pneumatic tire covers. Ajax Engineering Co. and J. Cox, both of Arthur Street, Birmingham.

111,176 Tire-building machine. H. Wade, 111 Hatton Garden, London, (Miller Rubber Co., Akron, Ohio, U. S. A.)

111,928 Bead wire-covering machine. W. & A. Bates and J. Healy—all of St. Mary's Mills, Leicester, and F. Shaw & Co., Corbett Street Iron Works, Bradford, Manchester.

112,016 Machine for making cord tire strips. J. M. Gilbert, 250-West 54th Street, New York, N. Y., U. S. A.

112,021 Tire-building machine. A. C. Abbott, 275 Hurlbut Ave., and W. B. Norton, 424 Ford Bldg., both in Detroit, Michigan, U. S. A.

112,151 Time device for vulcanizing presses. Ajax Engineering Co. and J. Cox, Arthur Street, Birmingham.

112,176 Machine for applying hard rubber base to solid tire rims. Wood-Milne, Ltd., and T. H. Roberts, Ribble Bank Mills, Preston, Lancashire.

112,332 Apparatus for spraying the interior surface of pneumatic tire casings with rubber solution. G. A. Urbach, 309 Mayflower Street, Pittsburgh, Pennsylvania, U. S. A.

115,851 Electric repair vulcanizer for tires and tubes. S. C. F. Varvel, 18 Bridge Street, Sydney, Australia.

116,774 Means for collapsing tire cores. Wood-Milne, Ltd., Ribble Bank Mills, Preston, and W. Ford, Meadow Street, Leyland, Lancashire.

120,564 Apparatus for making tire covers. W. B. Harsel, 1144 East Market Street, and E. A. Nall, 152 Grand Ave., both of Akron, Ohio, U. S. A. (not yet accepted.)

120,564 Apparatus for making tire covers. W. B. Harsel, 1144 East Market Street, and E. A. Nall, 152 Grand Avenue, both of Akron, Ohio, U. S. A. (Not yet accepted.)

120,699 Repair apparatus for vulcanizing tires. J. B. Stroud, Pass Christian, Mississippi, U. S. A.

121,527 Apparatus for stacking tires, etc. Dunlop Rubber Co., 14 Regent Street, London, and C. Macbeth, Para Mills, Aston Cross, Birmingham.

122,137 Machine for making tires. E. Hopkinson, 1790 Broadway, New York, N. Y., U. S. A.

123,068 Machine for deflating pneumatic tires. H. P. Kraft, 219 Godwin Ave., Ridgewood, New Jersey, U. S. A. (Not yet accepted.)

123,136 Apparatus for making solid tires. Henley's Telegraph Works Co., and W. T. & G. Sutton, 13 Bloomfield St., London Wall. London, and E. E. Judge, 36 Grange Road, Gravesend.

123,137 Apparatus for trimming solid tires. Henley's Telegraphic Works Co., and W. T. and G. Sutton, 13 Bloomfield St., London Wall, London, and E. E. Judge, 36 Grange Road, Gravesend.

123,138 Apparatus for trimming solid tires. Henley's Telegraphic Works Co., and W. T. and G. Sutton, 13 Bloomfield St., London Wall, London, and E. E. Judge, Gravesend.

123,636 Tire mold. E. Hopkinson, 1790 Broadway, New York N. Y., U. S. A.

124,277 Apparatus for molding butt-ended tubes. Dunlop Rubber Co., C. Macbeth and R. H. Cunningham, 14 Regent Street, Westminster.

124,365 Machine for converting strip rubber into tubular form for inner tubes, including means for cleaning off chalk, etc. E. C. R. Marks, 57 Lincoln's Inn Fields, London, (The Goodyear Tire & Rubber Co., Akron, Ohio, U. S. A.)

124,585 Apparatus for applying hard rubber layer to foundation band of solid tires. Dunlop Rubber Co., C. Macbeth and E. Sullivan, 14 Regent Street, Westminster.

124,873 Vulcanizing press. Dunlop Rubber Co., C. Macbeth and H. Wilshaw, 14 Regent Street, Westminster, London.

124,998 Tire mold. E. Hopkinson, New York, N. Y., U. S. A.

125,071 Apparatus for making cord tires. J. D. Thomson, 377 Buckingham Street, Akron, Ohio, U. S. A.

125,705 Calender for rubber strips. Dunlop Rubber Co., C. Macbeth and H. Wilshaw, 14 Regent Street, Manchester.

126,111 Apparatus for making tires. Dunlop Rubber Co., 14 Regent St., Westminster and C. Macbeth and C. K. Jones, Para Mills, Aston Cross, Birmingham.

126,131 Apparatus for making inner tubes. Dunlop Rubber Co., 14 Regent Street, Westminster, and C. Macbeth, Para Mills, Aston Cross, Birmingham.

126,181 Tire molds for shaping and vulcanizing. D. Moseley & Sons and T. W. Duncan, Chapel Field Works, Ardwick, Manchester.

127,970 Machine for cutting off marginal portions of pneumatic tires. North Western Rubber Co., Akron, Ohio, U. S. A., and J. Torry, Hardwick, Park Drive, Blumdellsands; H. R. Jones, 122 Litherland Road, Bootle; and J. Eastman, 9 Alexandria Mount, Litherland—all in Lancashire.

127,990 Special apparatus for making wheel tires. E. Hopkinson, 1790 Broadway, New York, N. Y., U. S. A.

128,004 Mold for tire cover. E. Hopkinson, 1790 Broadway, New York, N. Y., U. S. A.

128,114 Apparatus for building tire covers. E. Hopkinson, 1790 Broadway, New York, N. Y., U. S. A.

128,777 Mold and process for making tires. E. Hopkinson, 1790 Broadway, New York, N. Y., U. S. A.

128,778 Application for shaping and setting tire covers prior to final formation and vulcanization. E. Hopkinson, New York, N. Y., U. S. A.

128,684 Apparatus for placing tires in molds, etc. Dunlop Rubber Co., C. Macbeth and E. Sullivan, 14 Regent Street, Westminster.

129,411 Apparatus for making tires, transporting during manufacture, etc. Dunlop Rubber Co., 14 Regent Street, London, and C. Macbeth, Para Mills, Aston Cross, Birmingham.

129,813 Sewing machine for shaping tire fabric. F. Lehmann, Trimbach, near Olten, Canton Solothurn, Switzerland.

130,440 Apparatus for applying tread to foundation band of solid tire. Dunlop Rubber Co., 14 Regent Street, Westminster, and C. Macbeth, Para Mills, Aston Cross, Birmingham.

130,459 Sectional mold for tires. E. Hopkinson, 1790 Broadway, New York, N. Y., U. S. A.

131,311 Apparatus for shaping tire covers. E. Hopkinson, 1790 Broadway, New York, N. Y., U. S. A.

131,407 Device for opening tire molds and carrying tires on cores of contact with shells after separation. Dunlop Rubber Co., 14 Regent Street, Westminster, and C. Macbeth, Para Mills, Aston Cross, Birmingham.

131,760 Apparatus for simultaneously forming tires of different diameters. Dunlop Rubber Co., 14 Regent Street, Westminster, and C. Macbeth, Para Mills, Aston Cross, Birmingham.

132,409 Outfit for inflating tires. W. T. Thorne, The Butts Garage, Worcester.

133,155 Apparatus for making solid rubber band tires. C. & A. E. Burnett, Sunnybank, Trowbridge, Wiltshire.

133,325 Apparatus for trimming tire fabric at inner edges of beads, etc. Firestone Tire & Rubber Co., assignee of E. D. Putt, both in Akron, Ohio, U. S. A.

133,647 Loom for weaving pneumatic tire casings, etc. E. Ingham, Washington, D. C., U. S. A.

134,584 Apparatus for shaping solid tires. C. and A. E. Burnett, Sunnybank, Trowbridge, Wiltshire.

136,301 Apparatus for molding tires. A. A. Thornton, 8 Quality Court, Chancery Lane, London.

136,888 Tire mold. A. A. Thornton, 8 Quality Court, Chancery Lane, London.

136,889 Machine for making tire covers. A. A. Thornton, 8 Quality Court, Chancery Lane, London.

139,411 Apparatus for retreading tires. S. H. Goldberg, Chicago, Illinois, U. S. A.

140,024 Repair vulcanizer. F. O. Lake, 58 Rhode Island avenue, Washington D. C., U. S. A.

140,317 Tool for abrading rubber surfaces preparatory to patching. F. N. Cordell, 709 Pine Street, St. Louis, Missouri, U. S. A.

140,893 Apparatus for making solid tires, washers, etc. F. Offenhauser, Tarrytown, N. Y., U. S. A.

140,875 Manufacture of cushion tires. A. J. Ostberg and A. Kenny, Judd Street, Richmond. Victoria, Australia.

142,368 Apparatus for making pneumatic tires. E. Hopkinson, 1790 Broadway, New York, N. Y., U. S. A.

142,634 Hydraulic press for shaping and vulcanizing tires. E. Lefebre, 6 Rue Carome-Prenaut, Argenteuil, France.

142,642 Calender for stretching and finishing tubular fabrics. G. Hunt, 9 Elm Street, West Bridgeford, and C. W. Campion, Robin Hood Street, both in Nottingham.

142,996 Machine for making pneumatic tire covers. Dunlop Rubber Co., 14 Regent Street, Westminster, and C. Macbeth, Para Mills, Aston Cross, Birmingham.

143,668 Segmental core for tires, to permit stretching from flat to U-section form before vulcanizing. J. H. Nuttall, and D. Bridge & Co., Castleton Iron Works, Castleton, Lancashire.

144,779 Repair vulcanizer. H. Frost & Co., 148 Great Portland Street, London, and W. H. Welch, 182 Ashley Down road, Bishopstone, Bristol.

144,822 Apparatus for making cord tires. Vickers, Limited, Vickers House, Broadway, Westminster, Sir J. McKechnie, Naval Construction Works, Barrow-in-Furness and A. Ryan, 43 Cranbrook street, Oldham.

145,515 Special apparatus for making fabric tires. The Goodyear Tire & Rubber Co., assignee of W. C. Tyler—both of Akron, Ohio, U. S. A. (Not yet accepted.)

145,516 Special apparatus for making fabric tires. The Goodyear Tire & Rubber Co., assignee of E. G. Templeton—both of Akron, Ohio, U. S. A. (Not yet accepted.)

145,590 Special apparatus for making fabric tires. The Goodyear Tire & Rubber Co., assignee of W. C. Tyler—both of Akron, Ohio, U. S. A. (Not yet accepted.)

145,591 Special apparatus for making fabric tires. The Goodyear Tire & Rubber Co., assignee of W. B. Harsel—both of Akron, Ohio, U. S. A. (Not yet accepted.)

145,679 Special apparatus for rotating mandrel in making fabric tires. W. B. Harsel, 1144 East Market street, and E. A. Nall, 152 Grand avenue—both of Akron, Ohio, U. S. A.

145,680 Special apparatus for applying bead cores to partially built fabric tire covers. W. B. Harsel, 1144 East Market street and E. A. Nall, 152 Grand avenue—both in Akron, Ohio, U. S. A.

145,681 Special apparatus for making fabric tires. W. B. Harsel, 1144 East Market street, and E. A. Nall, 152 Grand avenue —both in Akron, Ohio, U. S. A. (Not yet accepted.)

145,682 Special apparatus for making fabric tires. W. B. Harsel, 1144 East Market street, and E. A. Nall, 152 Grand avenue —both in Akron, Ohio, U. S. A. (Not yet accepted.)

145,683 Special apparatus for making fabric tires. W. B. Harsel, 1144 East Market street and E. A. Nall, 152 Grand avenue —both in Akron, Ohio, U. S. A. (Not yet accepted.)

145,684 Special apparatus for making fabric tires. W. B. Harsel, 1144 East Market street and E. A. Nall, 152 Grand avenue— both in Akron, Ohio, U. S. A. (Not yet accepted.)

145,685 Special apparatus for making fabric tires. W. B. Harsel, 1144 East Market street and E. A. Nall, 152 Grand avenue —both in Akron, Ohio, U. S. A. (Not yet accepted.)

146,337 Apparatus for vulcanizing tires and other rubber articles. The Goodyear Tire & Rubber Co., assignee of C. Wattleworth—both in Akron, Ohio, U. S. A. (Not yet accepted.)

146,340 Special apparatus for making cores for beaded edges of tire covers. The Goodyear Tire & Rubber Co., assignee of W. B. Harsel—both of Akron, Ohio, U. S. A. (Not yet accepted.)

146,341 Tire mold. The Goodyear Tire & Rubber Co., assignee of W. C. State—both in Akron, Ohio, U. S. A. (Not yet accepted.)

146,342 Mold for vulcanizing tires under internal pressure. The Goodyear Tire & Rubber Co., Akron, Ohio, assignee of B. Darrow, Los Angeles, California, U. S. A. (Not yet accepted.)

146,343 Special apparatus for treading tires. The Goodyear Tire & Rubber Co., assignee of K. B. Kilborn—both of Akron, Ohio, U. S. A. (Not yet accepted.)

146,344 Special apparatus for making fabric tires, the tread and sidewalls being treaded before placed on the carcass. The Goodyear Tire & Rubber Co., Akron, Ohio, assignee of B. Darrow, Los Angeles, California, U. S. A. (Not yet accepted.)

146,348 Apparatus for applying hard rubber base to metal foundation band of tires. The Goodyear Tire & Rubber Co., assignee of A. Weatherill—both of Akron, Ohio, U. S. A. (Not yet accepted.)

147,248 Repair vulcanizer for tire treads. H. K. Wheelock, F. A. Weller and W. R. Fontaine, 1730 South Los Angeles Street, Los Angeles, California, U. S. A.

147,508 Collapsible cores for manufacturing tires. P. and B. de Mattia, Clifton, New Jersey, U. S. A.

147,509 Collapsible cores for manufacturing tires. P. and B. de Mattia, Clifton, New Jersey, U. S. A.

147,960 Rubber mixing machine. F. H. Banbury, Ansonia, Connecticut, U. S. A.

148,045 Machine for stripping tires. W. H. Phipps, 57 Wick Road, and W. T. Hooper, 71 Repton Road, Brislington, Bristol.

148,077 Device for vulcanizing tire covers. E. Hopkinson, 1790 Broadway, New York, N. Y., U. S. A.

148,268 Apparatus for manufacture of pneumatic tires. T. Sloper, Southgate, Devizes, Wiltshire.

149,577 Apparatus for producing a shaped tire casing from a flat band. E. Hopkinson, 1790 Broadway, New York, N. Y., and H. V. Lough, 276 Washington Street, Hartford, Connecticut, U. S. A.

150,269 Machine for kneading and mixing rubber. A. P. Lohman, Perkins Hall, Akron, Ohio, U. S. A.

150,306 Sectional core for tires. G. H. Wheatley, 1346 Rawson Street, Chicago, Illinois, U. S. A. (Not yet accepted.)

150,346 Tire-molding apparatus. Howe Rubber Corporation, Codwise Avenue, assignee of J. Schmidt—both of New Brunswick, New Jersey, U. S. A.

150,373 Apparatus for molding and vulcanizing tires. Dunlop Rubber Co., 14 Regent Street, Westminster, London, and C. Macbeth, Para Mills, Aston Cross, Birmingham.

150,717 Machine for covering tire cores with cord fabric, etc. A. Wolber, 76 Rue des Arts, Levallois-Perrett, Seine, France.

150,754 Rubber forcing machine. J. W. Gomersall, 16 Maple avenue, Chorlton-cum-Hardy, Manchester.

150,792 Device for applying pressure to tires, etc., during vulcanization. T. Sloper, Southgate, Devizes, Wiltshire.

151,500 Apparatus for making tires of concentrically wound layers of rubber. H. C. Higgin, 74 Knightsbridge, London.

152,305 Tire-repair vulcanizer. F. Sinzig, 33 Arbergergasse, and H. Wenger, 39 Neuengasse, both in Berne, Switzerland. (Not yet accepted.)

152,804 Device for opening tire molds. Dunlop Rubber Co., and C. Macbeth, 1 Albany Street, Regents Park, London.

152,987 Apparatus for manufacturing tires. The Goodyear Tire & Rubber Co., assignee of R. S. Trogner, 149 King Drive, both of Akron, Ohio, U. S. A.

152,989 Machine for withdrawing core from built-up tire casing. The Goodyear Tire & Rubber Co., assignee of H. A. Miller, 74 South Martha Avenue—both in Akron, Ohio, U. S. A.

154,664 Apparatus for molding and vulcanizing tire studs. Dunlop Rubber Co., 1 Albany Street, Regents Park, London, and C. Macbeth, Fort Dunlop, Erdington, Birmingham.

154,684 Apparatus for vulcanizing tires. Dunlop Rubber Co. 1 Albany street, Regents Park, London, and C. Macbeth and W. E. Hardeman, Para Mills, Aston Cross, Birmingham.

155,016 Extrusion machine adapted to cut apart two solid tires when extruded in one piece.

155,086 Apparatus for making tires. D. Maggiora, Firenze, Careggi, Italy.

157,112 Machine for making studded tire covers. E. Janik, I E, Karl Ludwigstrasse, Vienna.

157,113 Apparatus for making studded tire covers. E. Janik, I E, Karl Ludwigstrasse, Vienna.

157,114 Machine for making studded tire covers. E. Janik, I E, Karl Ludwigstrasse, Vienna.

157,115 Machine for making studded tire covers. E. Janik, I E, Karl Ludwigstrasse, Vienna.

157,150 Tire core provided with spacing members to insure adequate transverse stretching during vulcanization. Federal Rubber Co., Cudahy, assignee of A. A. Frank, Milwaukee, both in Wisconsin, U. S. A.

157,317 Mechanism for making studded tire covers. E. Janik, I E, Karl Ludwigstrasse, Vienna.

157,412 Apparatus for vulcanizing tires. F. T. Roberts, Cleveland, Ohio, U. S. A.

157,413 Mold for vulcanizing rubber, composed of 97 per cent. aluminum and 3 per cent. megnesium. F. T. Roberts, Cleveland, Ohio, U. S. A.

157,479 Apparatus for reducing or extinguishing the burner flame of a vulcanizer. W. Frost and H. Front & Co., Ltd.

THE DOMINION OF CANADA

166,266 Tire vulcanizer press. Goodyear Tire & Rubber Co., assignee of E. Nall, both of Akron, Ohio, U. S. A.

166,409 Tire mold core. The Gutta Percha & Rubber Limited, assignee of J. H. Coffey and J. H. Coffey, Jr., all of Toronto, Canada.

166,899 Automobile tire tool. W. J. Reid, Gananoque, Canada.

167,334 Tire-building machine. Morgan & Wright, assignee of T. Midgley, Lancaster, Ohio, U. S. A.

167,336 Tire-building machine. Morgan & Wright, assignee of T. Midgley, Lancaster, Ohio, U. S. A.

167,369 Vulcanizing apparatus, J. W. Arthur, Warren, Ohio, U. S. A.

168,025 Tread ring or vehicle tire mold. F. McRea Bowden, Toronto, Canada.

168,555 Tire-molding machine. Gutta Percha & Rubber Limited, assignee of J. H. Coffey and J. H. Coffey, Jr., all of Toronto, Canada.

169,440 Bead cleaner. The Canadian Consolidated Rubber Co., Ltd., Montreal, Canada, assignee of T. Midgley, Lancaster, Ohio, U. S. A.

169,441 Bead trimmer. The Canadian Consolidated Rubber Co., Ltd., Montreal, Canada, assignee of T. Midgley, Lancaster, Ohio, U. S. A.

169,455 Bias cutter. The Firestone Tire & Rubber Co., assignee of W. C. Stevens, both of Akron, Ohio, U. S. A.

169,935 Tire-building tool. The Canadian Consolidated Rubber Co., Ltd., Montreal, Canada, assignee of W. Kaufman, New York, N. Y., U. S. A.

169,958 Tire-building machine. The Miller Rubber Co., assignee of F. F. Brucher, both of Akron, Ohio, U. S. A.

169,959 Tire-building tool. Morgan & Wright, assignees of W. Kearns, both of Detroit, Michigan, U. S. A.

170,161 Repair vulcanizer. D. P. Einrem, Springfield, So. Dakota, U. S. A.

171,104 Tire-rim tool. The Burrill Tire Tool Co., assignee of F. H. Burrill both of Concord Junction, Massachusetts, U. S. A.

171,174 Tire-rim tool. A. A. Friestadt, Chicago, Illinois, U. S. A.

171,656 Flap-trimming machine. The Canadian Consolidated Rubber Co., Ltd., Montreal, Canada, assignee of T. Midgley, Lancaster, Ohio, U. S. A.

172,649 Collapsible core. D. R. Hanawalt, Akron, Ohio, U. S. A.

172,829 Repair vulcanizer. A. B. Low, Denver, Colorado, U. S. A.

172,830 Repair vulcanizer. A. B. Low, Denver, Colorado, U. S. A.

173,079 Tube machine. A. Bleecker, Akron, Ohio, U. S. A.

173,333 Tire mold. The United States Rubber Co., New York, N. Y., assignee of C. F. Adamson, East Palestine, Ohio, both in U. S. A.

173,343 Tire-building machine. Canadian Consolidated Rubber Co., Ltd., Montreal, Canada, assignee of G. F. Fisher, Ruselle, New Jersey, U. S. A.

175,920 Repair vulcanizer. E. Bellrose, Cohoes, N. Y., U. S. A.

176,005 Vulcanizing apparatus. Canadian Consolidated Rubber Co., Ltd., Montreal, Canada, assignee of C. J. Randall, Naugatuck, Connecticut, U. S. A.

177,302 Non-skid tread mold. J. E. Hauvette, New Brunswick, New Jersey, U. S. A.

177,475 Tubing machine. The Canadian Consolidated Rubber Co., Ltd., Montreal, Canada, assignee of R. B. Price, New York, and W. J. Steinele, Elmhurst Heights, both in New York, U. S. A.

179,474 Paper-wrapping machine for tires. The Canadian Consolidated Rubber Co., Ltd., Montreal, Canada, assignee of T. Midgley, Lancaster, Ohio, U. S. A.

180,254 Apparatus for cutting and reeling tire fabric. The Canadian Consolidated Rubber Co., Ltd., Montreal, Canada, assignee of N. DeCourcey, Detroit, Michigan, U. S. A.

180,267 Machine for making tires. The Firestone Tire & Rubber Co., assignee of W. C. Stevens, both of Akron, Ohio, U. S. A.

180,377 Tube-repair vulcanizer. The Marvel Accessories Manufacturing Co., assignee of J. B. Rose, both of Cleveland, Ohio, U. S. A.

180,520 Tire-stripping machine. The Firestone Tire & Rubber Co., assignee of W. C. Stevens, both of Akron, Ohio, U. S. A.

183,019 Tire skiver. B. E. Maxwell, Wichita, Kansas, U. S. A.

184,498 Sectional core for making inner tubes. The Mercer Tire Co., assignee of H. Dech—both of Trenton, New Jersey, U. S. A.

184,563 Tire-wrapping machine. O. E. Heckman, Akron, Ohio, U. S. A.

184,874 Mold-alining device for vulcanizing press. The Canadian Consolidated Rubber Co., Ltd., Montreal, Canada, assignee of H. J. Hoyt, Detroit, Michigan, U. S. A.

185,197 Collapsible tire-core. T. Midgley, Sr., Columbus, and T. Midgley, Jr., Dayton, co-inventors—both of Ohio, U. S. A.

185,725 Tire vulcanizer. A. A. Bitter and H. K. Wheelock, co-inventors—both of Los Angeles, California, U. S. A.

185,822 Tire-vulcanizer. W. Reilly, Kerrisdale, British Columbia, Canada.

185,859 Tire-vulcanizing apparatus. The Doughty Tire Co., assignee of H. J. Doughty, both of Providence, Rhode Island, U. S. A.

187,040 Calender for tire-tread stock. The Canadian Consolidated Rubber Co., Ltd., Montreal, Canada, assignee of W. Kearns, Detroit, Michigan, U. S. A.

187,237 Tire-bead trimming machine. The Canadian Consolidated Rubber Co., Limited, Montreal, Canada, assignee of R. L. Taft, Hartford, Connecticut, U. S. A.

187,451 Machine for molding tire covers on a rotating core. F. H. Mercer and H. H. F. H. Bleas, both of Melksham, Wilts, England, coinventors.

187,788 Machine for making inner tubes. The Goodyear Tire & Rubber Co., Akron, assignee to E. A. Hall, executrix, Stow, Summit, both in Ohio, U. S. A.

187,839 Core for tires. V. L. Cox, Akron, Ohio, U. S. A.

187,890 Core for tires. C. B. Reynolds, Sawtelle, California, U. S. A.

188,107 Sectional tire mold for use in superposition with other molds in vulcanizing press. J. A. Swinehart, Akron, Ohio, U. S. A.

188,190 Tire-building machine. A. O. Abbott, Jr., and W. B. Norton, assignee of 1-2 interest—both of Detroit, Michigan, U. S. A.

188,486 Mold for pneumatic tires. E. Hopkinson, New York, N. Y., U. S. A.

188,487 Mold for pneumatic tires. E. Hopkinson, New York, N. Y., U. S. A.

188,488 Tire-vulcanizing apparatus. E. Hopkinson, New York, N. Y., U. S. A.

188,729 Fabric-testing device. The Canadian Consolidated Rubber Co., Ltd., Montreal, Canada, assignee of E. E. A. G. Meyer, Detroit, Michigan, U. S. A.

188,899 Repair vulcanizer. F. Low and W. G. Charleson, assignee of A. S. Mackey, all of Ottawa, Canada.

189,073 Core for tires. C. F. Ames, Akron, Ohio, U. S. A.

189,473 Core for tires. T. Midgley, Sr. and Jr., coinventors, both of Columbus, Ohio, U. S. A.

189,573 Tubing machine. The Canadian Consolidated Rubber Co., Ltd., Montreal, Canada, assignee of W. J. Steinle, Elmhurst Heights, N. Y., U. S. A.

189,916 Machine for shaping tire covers. F. H. Mercer and H. F. H. Blease, Melksham, England.

189,960 Tube-wrapping machine. O. E. Heckman, Akron, Ohio, U. S. A.

189,986 Mold for forming tires. W. D. McNaull, Toledo, Ohio, U. S. A.

190,033 Tire-wrapping machine. The Canadian Consolidated Rubber Co., Ltd., Montreal, Canada, assignee of C. B. Whittlesey, Hartford, Connecticut, U. S. A.

190,925 Tire-building machine. E. Hopkinson, New York, N. Y., U. S. A.

190,926 Tire-building machine. E. Hopkinson, New York, N. Y., U. S. A.

192,217 Tire-bead cementing and reeling machine. The Canadian Consolidated Rubber Co., Ltd., Montreal, Canada.

192,218 Tire-building machine. The Canadian Consolidated Rubber Co., Ltd., Montreal, Canada.

192,219 Tire-bead wrapping machine. The Canadian Consolidated Rubber Co., Ltd., Montreal, Canada.

192,467 Tire-making machinery. The Canadian Consolidated Rubber Co., Ltd., Montreal, Canada.

192,984 Apparatus for testing tires. E. Ramisdell, Cleveland, Ohio, U. S. A.

193,009 Device for repairing pneumatic tire tubes. G. B. Wood, Detroit, Michigan, U. S. A.

193,179 Apparatus for making tire casings. E. Hopkinson, 1790 Broadway, New York, N. Y., U. S. A.

193,356 Spreader for tire valves. H. P. Kraft, Ridgewood, New Jersey, U. S. A.

194,070 Apparatus for building tires. The Canadian Consolidated Rubber Co., Ltd., Montreal, Canada, assignee of T. Midgley, Worthington, Ohio, U. S. A.

194,352 Apparatus for making pneumatic tire casings. J. L. G. Dykes, Chicago, Illinois, U. S. A.

194,353 Tire vulcanizer. J. L. G. Dykes, Chicago, Illinois, U. S. A.

194,462 Tongs for lifting tire cores. The Canadian Consolidated Rubber Co., Ltd., Montreal, Canada, assignee of O. Grosvenor, New York, N. Y., U. S. A.

194,481 Manufacture of tire casings for pneumatic tires. E. Hopkinson, New York, N. Y., U. S. A.

194,653 Tire vulcanizer. W. B. Burke, Cleveland, Ohio, U. S. A.

194,659 Tire abrader. F. N. Cordell, St. Louis, Missouri, U. S. A.

194,931 Construction of pneumatic tire casings. W. L. Mitten, Davenport, Iowa, U. S. A.

195,095 Apparatus for making tires. G. F. Knight, and B. M. Frank, co-inventors, both of Canton, Ohio, U. S. A.

195,131 Tire abrader. F. N. Cordell, St. Louis, Missouri, U. S. A.

195,303 Apparatus for drying tire beads. The Canadian Consolidated Rubber Co., Ltd., Montreal, Canada, assignee of G. McNeill, Detroit, Michigan, U. S. A.

195,313 Apparatus for making tire casings. The Federal Rubber Co., Cudahy, assignee of A. A. Frank, Milwaukee, both in Wisconsin, U. S. A.

195,501 Apparatus for forming tires. J. T. Lister, Cleveland, Ohio, U. S. A.

195,882 Portable repair vulcanizer. The Horsey Products Co., assignee of E. T. Horsey—both of Cleveland, Ohio, U. S. A.

196,152 Machine for trimming tire casings. Firestone Tire & Rubber Company, assignee of E. D. Putt—both of Akron, Ohio, U. S. A.

196,207 Machine for forming tires. L. P. Arnold, Norwalk, Connecticut, U. S. A.

196,395 Apparatus for opening tire molds, etc. The Dunlop Rubber Co., Ltd., Westminster, County of London, assignee of C. Macbeth, Birmingham, County of Warwick, both in England.

196,396 Apparatus for making solid rubber tires double, then cutting apart. The Dunlop Rubber Co., Ltd., Westminster, County of London, assignee of C. Macbeth, Birmingham, County of Warwick—both in England.

196,624 Machine for building pneumatic tire casings. E. Hopkinson, New York, N. Y., U. S. A.

196,661 Machine for making tires. The Goodyear Tire & Rubber Co., assignee of W. B. Harsel—both of Akron, Ohio, U. S. A.

195,997 Tire band stretching machine. J. L. Dykes, Chicago, Illinois, U. S. A.

197,358 Machine for manufacturing tire treads. G. A. Hagstrom, Kansas City, and I. S. Snyder, Rosedale, assignee of 1-2 interest—both in Kansas, U. S. A.

197,390 Tire-vulcanizing apparatus. E. Hopkinson, New York, N. Y., U. S. A.

197,391 Apparatus for manufacturing pneumatic tires. E. Hopkinson, New York, N. Y., U. S. A.

197,493 Apparatus for manufacturing tires. E. Hopkinson, New York, N. Y., U. S. A.

197,732 Tire-opening machine. W. C. Stevens, Akron, Ohio, U. S. A.

198,140 Apparatus for applying cushion tires to rims. W. C. Stevens and C. W. Steele, coinventors—both of Akron, Ohio, U. S. A.

198,558 Apparatus for separating tires from cores. The Canadian Consolidated Rubber Co., Limited, Montreal, Canada, assignee of J. J. Shea, Hartford, Connecticut, U. S. A.

198,565 Tire-cutting or trimming machine. The Goodyear Tire & Rubber Co., assignee of E. A. Nall, both of Akron, Ohio, U. S. A.

198,610 Apparatus for supporting tire casings and spreading beads. E. Ramsdell, assignee of F. M. Case—both of Cleveland, Ohio, U. S. A.

198,822 Segmental tire-core. The Goodyear Tire & Rubber Co., assignee of C. Wattleworth—both of Akron, Ohio, U. S. A.

198,823 Interlocking tire-mold. The Goodyear Tire & Rubber Co., assignee of C. Wattleworth—both of Akron, Ohio, U. S. A.

198,875 Tire-tread constructor. J. A. Thomas and E. J. Usher, co-inventors—both of Toronto, Canada.

199,071 Tire-wrapping machine. The Pierce Wrapping Machine Co., assignee of F. M. Pierce—both of Chicago, Illinois, U. S. A.

199,214 Apparatus for manufacturing solid rubber tires. The Dunlop Rubber Co., Westminster, County of London, assignee of C. Macbeth and E. Sullivan, both of Birmingham, County of Warwick—all in England.

199,432 Apparatus for making cord tire casings. J. M. Gilbert, New York, N. Y., assignee of F. B. Carlisle, Andover, Massachusetts, U. S. A.

199,463 Marking device for pneumatic tires. G. J. Anderson and W. R. Smith, co-inventors—both of Cleveland, Ohio, U. S. A.

200,066 Mold for making inner tubes for pneumatic tires. The Dunlop Rubber Co., Ltd., Westminster, County of London, assignee of Colin Macbeth, Birmingham, County of Warwick —both in England.

200,067 Machine for calendering vulcanite bases. The Dunlop Rubber Co., Ltd., Westminster, County of London, assignee of Colin Macbeth and Harry Willshaw, both of Birmingham, County of Warwick—both in England.

200,169 Tire mold. H. Raflovich, Buffalo, N. Y., U. S. A.

200,349 Mold for vulcanizing pneumatic tires. W. Seward, Baltimore, Maryland, U. S. A.

200,666 Expansible core for tires. E. A. Krannich, Chicago Heights, Illinois, and L. A. Andregg, Mansfield, Ohio, each an assignee of 1-2 interest, both in U. S. A.

200,860 Tire-vulcanizing press. The Dunlop Rubber Co., Limited, Westminster, County of London, assignee of Colin Macbeth and H. Wilshaw, Birmingham, County of Warwick—all in England.

200,863 Apparatus for vulcanizing tires. Firestone Tire & Rubber Co., assignee of C. A. Myers—both of Akron, Ohio, U. S. A.

201,463 Machine for making pneumatic tire casings. The Dunlop Rubber Co., Limited, Westminster, County of London, assignee of Colin Macbeth and C. K. Jones, Birmingham, County of Warwick—all in England.

202,260 Tire-dressing wheel. S. M. Taber and P. E. Taber, Berkeley, California, U. S. A.

203,007 Repair vulcanizing apparatus. W. H. Miles, Stafford, England.

203,099 Apparatus for placing tires in molds. The Dunlop Rubber Co., Ltd., Westminster Co., of London, assignee of C. Macbeth and E. Sullivan, both of Birmingham, Co., of Warwick —all in England.

203,105 Pneumatic tire-building machine. The Goodyear Tire & Rubber Co., assignee of J. D. Thompson, both of Akron, Ohio, U. S. A.

203,350 Tire-machine drum. The W. F. Gammeter Co., assignee of W. F. Gammeter—both of Cadiz, Ohio, U. S. A.

203,522 Tire mold. H. Raflovich, Buffalo, N. Y., U. S. A.

204,759 Tire-building machine. The Goodyear Tire & Rubber Co., Akron, Ohio, assignee of W. C. Tyler, Racine, Wisconsin, both in U. S. A.

204,896 Tire-repair vulcanizer. C. Nordstrom, Milwaukee, Wisconsin, U. S. A.

204,952 Collapsible tire core. H. A. Denmire and The General Tire & Rubber Co., assignee of 1-2 interest—both of Akron, Ohio, U. S. A.

205,052 Expansible core for vulcanizing tires. C. Holm, Bowman, North Dakota, U. S. A.

205,139 Apparatus for cutting blanks. The Canadian Consolidated Rubber Co., Ltd., Montreal, Canada, assignee of W. Kent, New York, N. Y., U. S. A.

205,147 Machine for forming articles of fabric and rubber. Firestone Tire & Rubber Co., assignee of H. F. Maranville—both of Akron, Ohio, U. S. A.

205,327 Attachment for rubber mixing mills. The Canadian Consolidated Rubber Co., Ltd., Montreal, Canada, assignee of H. A. Weldon, Detroit, Michigan, U. S. A.

205,347 Bead-forming ring for pneumatic tires. The Howe Rubber Corporation, assignee of John Schmidt, both of New Brunswick, New Jersey, U. S. A.

205,906 Tire-tube deflating machine. M. C. Schweinert, New York, N. Y., U. S. A.

206,022 Mold for retreading tires. A. C. Davidson, Lacombe, Alta.

206,446 Mold for forming tire liners. J. H. Grube, Los Angeles, California, U. S. A.

206,680 Mold for tires. W. G. Martin, Toronto, Canada.

206,752 Rubber mixer. The Farrel Foundry & Machine Co., assignee of D. R. Bowen and C. F. Schnuck—all of Ansonia, Connecticut, U. S. A.

206,987 Rubber mixer. The Farrel Foundry & Machine Co., assignee of D. R. Bowen and C. F. Schnuck, co-inventors—all of Ansonia, Connecticut, U. S. A.

207,070 Tire-expander of soft rubber, etc. O. A. Paterson and O. M. Brancel, co-inventors, both of Minneapolis, Minnesota, U. S. A.

207,135 Mold for retreading tires. A. B. Legnard, Waukegan, Illinois, U. S. A.

207,295 Tire-building core and chuck. P. & B. DeMattia, co-inventors, both of Clifton, New Jersey, U. S. A.

207,296 Tire-building core. P. & B. DeMattia, co-inventors, both of Clifton, New Jersey, U. S. A.

207,299 Tire-peeling machine. E. P. Hafner and J. T. Roberts, co-inventors, both of St. Louis, Missouri, U. S. A.

207,516 Steam connection for hollow tire core. The Fisk Rubber Co., Chicopee Falls, assignee of T. Midgley, Hampden—both in Massachusetts, U. S. A.

207,517 Collapsible tire core. The Fisk Rubber Co., Chicopee Falls, assignee of T. Midgley, Hampden, both in Massachusetts, U. S. A.

207,518 Collapsible tire core. The Fisk Rubber Co., Chicopee Falls, assignee of T. Midgley, Hampden—both in Massachusetts, U. S. A.

207,519 Collapsible tire core. The Fisk Rubber Co., Chicopee Falls, assignee of T. Midgley, Hampden—both in Massachusetts, U. S. A.

207,520 Apparatus for building up cord blankets for pneumatic tires. The Goodyear Tire & Rubber Co., assignee of E. A. Nall, executrix of the estate of E. Nall, deceased—both of Akron, Ohio, U. S. A.

207,560 Collapsible tire core. The Fisk Rubber Co., Chicopee Falls, assignee of T. Midgley, Sr., Hampden, both in Massachusetts, and T. Midgley, Jr., Dayton, Ohio, U. S. A.

207,591 Tire-repair vulcanizer. G. B. Cooper, Joplin, Missouri, U. S. A.

207,741 Tire-repair vulcanizer. The Western Vulcanizer Manufacturing Co., assignee of H. K. Wheelock, both of Chicago, Illinois, U. S. A.

207,776 Mold for pneumatic tire covers. W. N. Rees, Sydney, and F. Jolly, Randwick, both in New South Wales, co-inventors.

207,806 Apparatus for vulcanizing rubber. W. B. Burke, Cleveland, Ohio, U. S. A.

207,976 Overflow cavity for tire molds. The Fisk Rubber Co., Chicopee Falls, assignee of T. Midgley, Hampden, both in Massachusetts, U. S. A.

207,985 Vulcanizing press for cord tires. The Goodyear Tire & Rubber Co., assignee of E. G. Templeton, both of Akron, Ohio, U. S. A.

208,233 Multiple vulcanizing press. The Goodyear Tire & Rubber Co., assignee of E. A. Nall, executrix of estate of E. Nall, deceased, both of Akron, Ohio, U. S. A.

208,234 Tire mold. The Goodyear Tire & Rubber Co., Akron, Ohio, assignee of B. Darrow, Los Angeles, California, U. S. A.

208,373 Apparatus for vulcanizing a plurality of tires whether of the same or different diameters. B. H. Rose, Cleveland, Ohio, U. S. A.

208,398 Apparatus for manufacturing solid tires. The Canadian Consolidated Rubber Co., Ltd., Montreal, Canada, assignee of W. J. Steinle, Elmhurst Heights, N. Y., U. S. A.

208,953 Tire-stand and buffing machine. C. L. Durham, Kansas City, Missouri, U. S. A.

209,128 Tire-rasping disk. The Smith One-Heat System, assignee of C. L. Smith and E. S. Webster, co-inventors—all of South Bend, Indiana, U. S. A.

209,129 Tire-rasping wheel. The Smith One-Heat System, assignee of C. L. Smith and E. S. Webster, co-inventors—all of South Bend, Indiana, U. S. A.

209,865 Tire press. W. E. Hardeman, Birmingham, England.

210,425 Tire-making machine. The Goodyear Tire & Rubber Co., Akron, Ohio, assignee of W. C. Tyler, Racine, Wisconsin, U. S. A.

210,426 Apparatus for attaching tire bases to rims. The Goodyear Tire & Rubber Co., assignee of E. A. Nall, administratrix of E. Nall, deceased—both of Akron, Ohio, U. S. A.

210,427 Tire-treading machine. The Goodyear Tire & Rubber Co., assignee of K. B. Kilborn, both of Akron, Ohio, U. S. A.

210,428 Stitching unit of tire-making machinery. The Goodyear Tire & Rubber Co., assignee of W. B. Harsel—both of Akron, Ohio, U. S. A.

210,429 Machine for making tires. The Goodyear Tire & Rubber Co., assignee of W. B. Harsel—both of Akron, Ohio, U. S. A.

210,431 Marker for tires. The Goodyear Tire & Rubber Co., assignee of W. B. Harsel—both of Akron, Ohio, U. S. A.

210,729 Tire-treading machine. The Dunlop Rubber Co., Ltd., London, assignee of C. Macbeth, Birmingham, Warwick—both in England.

210,731 Tire-building machine. The Goodyear Tire & Rubber Co., assignor of E. G. Templeton—both of Akron, Ohio, U. S. A.

210,732 Apparatus for producing cord-tire fabric. The Goodyear Tire & Rubber Co., assignee of F. A. Seiberling—both of Akron, Ohio, U. S. A.

210,816 Mold for pneumatic tires. S. J. Glenn and S. H. Moore, co-inventors—both of Brampton, Canada.

211,050 Mandrel for marking inner tubes, and method of manufacture. The Republic Tool & Manufacturing Co., assignee of C. E. Lowe—both of Cleveland, Ohio, U. S. A.

NEW ZEALAND

37,589 Portable repair vulcanizer. A. B. Low, 89 So. Broadway, Denver, Colorado, U. S. A.

39,396 Tire-repair vulcanizer. S. LeFavre Varvel, 18 Bridge Street, Sydney, New South Wales, Australia.

40,001 Two-part mold for tires. A. J. Ostberg and A. Kenny, Judd Street, Richmond, near Melbourne, Victoria.

42,098 Machine for shaping tire fabric on revoluble core. J. D. Thomson, 377 Buckingham Street, Akron, Ohio, U. S. A.

THE FRENCH REPUBLIC

365,023 Tire vulcanizer. E. Muller, Society Harvey Frost & Co., Ltd.

366,615 Portable Vulcanizer.

367,070 Vulcanizer. E. Hopkinson & Midgley.

370,188 Machine for preparing fabrics for tire covers. E. Sloper & R. Sloper.

371,493 Tire making machine. Prosper Nivet.

372,044 Vulcanizing Mold. Revere Rubber Co.

373,054 Apparatus for vulcanizing tires. T. Midgley.

375,678 Vulcanizer. Harvey Frost & Co., Ltd.

379,646 Press for tire manufacture. W. H. Cox.

380,759 Vulcanizing press for pneumatic tiers. Hallam & Nittes.

381,008 Mold for forming pneumatic tires. J. M. Piquerra.

382,320 Apparatus for tire manufacture. T. Sloper.

384,341 Apparatus for repairing tire tubes. E. Decauville.
384,383 Device for automatic closing of punctures in tire tubes. Puncture Free Pneumatic Tire Co., Ltd.
385,495 Flexible mandrel for use in repairing tire covers. E. Decauville.
387,045 Vulcanizer for tire repairs. A. Leenitz.
389,181 Machine for making pneumatic tire covers. Société d'Exploitation des Bievets et Procédés, Prosper Nivet.
389,502 Vulcanizer. J. Turio & E. Louc.
392,141 Vulcanizer for tire repairs. J. Berliner.
393,590 Repairs for tire covers. Trigwell.
394,990 Machine for the manufacture of tire covers. C. M. Gautier.
395,035 Press for tire and tire tube repairs. E. Decauville.
395,812 Machine for the manufacture of pneumatic tires. M. Hermander.
398,470 Machine for mounting rubber tires on wheels and fastening them with cables and attaching rims. L. L. Nozal.
398,962 Vulcanizing apparatus for tire and tubes. W. Frost & Harvey Frost & Co., Ltd.
401,843 Closure for tire puncture. C. L. Baldwin.
402,419 Tire Protector. P. Colliard.
404,595 Vulcanizer for tire repairs. J. K. Williams.
409,329 Vulcanizing press for pneumatic tires. Olier & Co.
410,942 Machine for manufacturing open tire treads. W. C. State.
413,073 Machine for the manufacture of tire envelopes. Royé and L'Huillier.
415,247 Machine for the manufacture of shoes for pneumatic tires. The Akron Pneumatic Tire Making Machine Co.
420,248 Vulcanizer for repairing air tubes and envelopes for pneumatic tires. N. A. Leonet.
421,932 Improvements applied to machines employed in the manufacture of tires and wheels. C. M. Gautier.
425,078 Arrangement with extensible core for the vulcanization of pneumatic tires. L. Morane.
425,580 Improvements in pneumatic tires for automatic repair. J. Steinberg.
426,309 Repairing pneumatic tire covers. F. Little.
426,584 Appliance for repair of pneumatic tire-covers. C. J. Martel.
428,168 Wrapper or counterwrapper for pneumatic tires. J. Doden.
428,602 Improvements in the manufacture of wrappers of pneumatic tires. J. S. Stocks and G. W. Bell.

429,057 Portable automatic vulcanizer for repairing tires. DeCaritat & Peruzzis.

429,967 Machine for inserting and fixing steel rivets in pneumatic tires. J. O'Brien.

431,147 Improvements in method of mounting core on pneumatic wheels. Madame L. Lepaulard.

434,287 Process of repairing pneumatic tires. C. Terrier.

436,823 Machine for the manufacture of pneumatic tires for automobiles. C. Ville.

439,053 Device for vulcanizing cemented portions of rubber tires and similar objects. C. F. Adamson.

440,941 Improvements in repair of pneumatic tires. C. M. Metsch.

442,665 Manufacture of covers for pneumatic tires. K. Rechberg.

443,180 Apparatus for vulcanizing covers of pneumatic tires. Olier & Co.

443,546 Machine for manufacturing pneumatic tires. DeLaski & Thropp Circular Woven Tire Co.

444,467 Portable vulcanizing apparatus for repairing en route automobile tubes and tires, etc. P. Seydel and N. Klemenz.

445,025 Improvements in arrangement for repair of tires. Weed Chain Tire Grip Co.

446,557 Improvements in apparatus for vulcanizing repaired tires. C. Michot.

448,744 Machine for manufacturing pneumatic tires. V. Gaudon.

449,224 Appliance for vulcanizing repairs to pneumatic tires. C. Terrier.

451,576 Improvements in the manufacture of pneumatic tires and covers. E. Clark and C. N. L. Winter.

452,788 Improvements in manufacture of covers for pneumatic tires. J. W. H. Dew and The Azulay Syndicate.

452,789 Improvements in manufacturing solid rubber and other tires.

453,054 Mold for making hollow rubber objects, especially air chambers for pneumatic tires.

456,690 Portable press for fitting rubber tires on wheels. Delahaye & Cie., Ltd.

462,799 Machine for automatically adjusting rivets and washers on the leather parts of anti-skid tires. J. M. Lestrade.

463,774 Press to shape and vulcanize automobile and bicycle tires. J. Schonning.

470,192 Machine for cutting rubber tires. A. Greenwell and Mlle. Rimbold.

472,885 Shaping appliance for tire carcasses. F. C. Morton.
473,462 Machine for setting and fixing rivets in tires and tire shoes and for similar purposes. The Dunlop Rubber Co., Ltd.
475,538 Apparatus for vulcanizing solid rubber tires. A. W. Gisgow.
476,115 Improved machine for manufacturing tires. Miller Rubber Co.
476,642 Improved pneumatic tire casing and a process and machine for manufacturing it. A. M. Kobiolke.
476,720 Improved tire making machine. E. Sloper.
477,402 Device for inflating pneumatic tires. C. W. Tarbet.
477,474 Press vulcanizer for tire casings. A. Wolber.
477,699 Vulcanizer for repairing tires and other rubber goods. W. H. Melas.
479,631 Improvements in cores used in the making of tires. J. H. Coffey and J. H. Coffey, Jr.
479,698 Improvements in vulcanizers. The Goodyear Tire & Rubber Co.
480,512 Improvements in cores used in vulcanizing. Heinig Johnston and Ohls.
480,583 Improvements in apparatus for molding tires. J. H. Coffey and Coffey, Jr.
481,171 Improvements in tables used in manufacturing inner tubes for pneumatic tires. Firestone Tire & Rubber Co.
483,360 Machine for the manufacture of tire casings. The Miller Rubber Co.
483,792 Apparatus for the manufacture of automobile tires. J. E. Hauvette.
484,118 Necessity case, adaptable for use as a press in repairing pneumatic tires. A. J. Burt.
484,326 Improvements in the means for tire repair vulcanizing. The Marvel Necessaries Manufacturing Co.
484,327 Improvements in the apparatus used for tire-repair vulcanizing. The Marvel Necessaries Manufacturing Co.
486,437 Machine for removing tires from the cores on which they are mounted. Firestone Tire & Rubber Co.
487,160 Improvements in machine for making tires. The Goodyear Tire & Rubber Co., Akron, Ohio, U. S. A.
487,225 Apparatus and process for manufacturing an improved pneumatic tire. H. B. Wallace.
489,277 Improvements in the manufacture of cellular tires. J. C. Anderson.

489,431 Improvements in the apparatus and process for manufacturing pneumatic tire casings. J. M. Gilbert.

489,973 Improvements in apparatus for the manufacture of rubber tubing and other similar articles by compression. J. Stratton & E. A. Claremont.

490,805 Apparatus for making rubber tires. E. Hopkinson, New York, N. Y., U. S. A.

491,283 Improvements in apparatus for placing valves on pneumatic tires or other pneumatic articles. Dunlop Rubber Co. of Australasia, Ltd.

491,932 Apparatus for molding and maintaining the shape of pneumatic tire casings. E. Hopkinson, 1790 Broadway, New York, N. Y., U. S. A.

491,934 Molds for pneumatic tires. E. Hopkinson, 1790 Broadway, New York, N. Y., U. S. A.

491,935 Molds for the vulcanization of tire casings, E. Hopkinson, 1790 Broadway, New York, N. Y., U. S. A.

491,936 Apparatus and process for the manufacture of pneumatic tires. E. Hopkinson, New York, N. Y., U. S. A.

491,938 Machine for the manufacture of pneumatic tire casings. E. Hopkinson, New York, N. Y., U. S. A.

492,250 Machine for mounting pneumatic tires. Michelin & Co.

497,068 Machine to exhaust the air chambers of pneumatic tires. A Schrader's Son, Inc.

497,641 Improvements in machines for calendering bases or bands of vulcanite for solid rubber tires. The Dunlop Rubber Co., Limited.

498,012 (July 10, 1918) Apparatus for a machine with extensible core that can be regulated for curing pneumatic tires. Société Arnaud Soly et Cie.

498,594 Improvements in machinery for constructing the coverings of pneumatic tires. The Dunlop Rubber Co., Ltd.

499,193 Machine for constructing tires. The Goodyear Tire & Rubber Co., Akron, Ohio, U. S. A.

500,417 Improvements in mounting pneumatic tires. A. E. Jennings.

500,878 Improvements in transferring system used especially in manufacturing tires. The Dunlop Rubber Co., Ltd.

501,732 Machine to make pneumatic tire casings. J. L. G. Dykes.

501,749 Machine to expand the bands out of which pneumatic tires are made. J. L. G. Dykes.

501,785 Machine for expanding and vulcanizing casings for rubber tires. J. L. G. Dykes.

502,045 Apparatus and method for making tires. E. Hopkinson, New York, N. Y., U. S. A.

502,650 Apparatus for constructing pneumatic tires. E. Hopkinson, New York, N. Y., U. S. A.

502,848 Improvements in apparatus for regenerating treads and tires. S. H. Goldberg, Chicago, Illinois, U. S. A.

502,849 Improvements in apparatus for rebuilding tire treads. S. H. Goldberg, Chicago, Illinois, U. S. A.

GERMANY

246,895 Apparatus for the vulcanization or repair of rubber tires. Gaston Rose, Paris, France.

247,217 Apparatus for vulcanizing protective covers for pneumatic tires. A. Olier & Co., Clermont-Ferrand, France.

253,400 Press with extensible core for vulcanizing pneumatic tires. Lucien Morane, Paris, France.

255,795 Repair appliance for pneumatic tires. Gustav Joseph Martel, Chicago, Illinois, U. S. A.

261,951 Vulcanizing apparatus for improvement of rubber tires. Cecil F. Adamson, Akron, Ohio, U. S. A.

271,724 Machine for manufacturing tread covers for compressed air tires with fabric lining. Alphons Mathern, Zellikon, Switzerland.

277,987 Machine for the manufacture of tire treads. DeLaski & Thropp Circular Woven Tire Co., Trenton, New Jersey, U. S. A.

280,897 A German Bead Trimmer. O. Meir.

282,057 Machinery for placing a new tread on worn pneumatic tires for motor vehicles. Franz Kuhne, Alaunstrasse, 13 Dresden.

283,848 Machine for manufacturing tire treads. Henry J. Doughty, Edgewood, Rhode Island, U. S. A.

283,937 Press for the manufacture of solid tires or other rubber articles. Continental Caoutchouc und Gutta Percha Co., Hanover.

288,709 Tire-making machine. The DeLaski & Thropp Circular Woven Tire Co., Trenton, New Jersey, U. S. A. Represented by M. Löser and O. H. Knoop, patent lawyers, Dresden.

314,148 Mechanism for attaching treads to tires. Lorenz Klingler, Nurnberg.

317,144 Press to mold plastic masses. Edmund Muller, Hemeling, Bremen.

320,337 Machine to mold pneumatic tire covers. F. H. Mercer, H. F. H. Blease and the Avon India Rubber Co., Limited, Melksham, England.

320,338 Machine to mold the covers of pneumatic tires. F. H. Mercer, H. F. H. Blease, and the Avon India Rubber Co., Limited, Melksham, England.

321,106 Mold for solid rubber tires, casings, and the like. Leonhard Herbert, Frankfort.

754,183 Tire repair apparatus. Hans Schmuckert, Molkenmarkt 19, Brandenburg a. H.

INDEX

Aaling air compressor 876
ABCilium metal alloy 387
Abell air compressor 877
Abrading machine, Blaisdell 304
Accelerators 110-113-678
Accessories, tire 911
Accounting, raw material cost 94
Accumulators, hydraulic 84-90-536
Acid cans 90
" cure 87
" curing solution 1032-1033
" damage 998
Achutt compound 1098
Adams, Dr. Calvin Thayer 65
" non-skid tread 982
" tread 954
Adamson collapsible core 340
" heater press 501
" mold press vulcanizer 701
" stand 359
" tread mold 381
" vulcanizer door 521
" vulcanizers 1021-1022
Addison tread 965
Add-Wear detachable tread 978
Addyman-Pfister strip cutter 294-741
" " tread builder 296
Adhesive attraction 131
Adjustments, tire mileage 47
Admor-Myler inner tire 933
Advance engine-driven pump 863
Advance-Ford engine-driven pump 865
Aerial wheel, Thompson 34
Aero-cushion tire filler 573
" engine-driven pump 864
Aertite tire pump 859
African rubber 96
Aging bins 117
" rolls, fabric, Cederstrom 127
Ahlbon tread 974
Air bags 84-1081-1082-1083-1108-1127
Air bottles 882-883-886
Air-brakes for trucks 1204
Air compressors 874-875-876-877
" " , tire plant 84
" elasticity 27
" expeller, Ellinwood 704
" filling stations 875
" hose clamp, Elkins 882
" -in-al 1093-1098
" line connections 880
" Lock tire valve 895
" nipple 663-664-666
" pressure strain 619
" substitutes 29
" valve stem 664
Airpex tire cushion 567
Airplane landing wheel rims 846
" " " test 274
" " " specifications 270
" tires 846
Continental 260
cord 268-659
development 658
dimensions 272
Goodrich 658
Goodyear 269-659
Palmer 236-658
S. A. E. specifications 271-593
sizes 657-658
tube measurements 272
" weights 272
valves 273-893
weights 272
Airplane wheel windshield, Goodrich....269
Ajax-Grieb detachable rim 817
" " Rubber Co. 68
" Road King tread 951
" treads 950-958-959-961-964
Akron buffer and cleaner 548
" building stands 361
" finishing stand 366
" heater press 509
" inner tube wrapper 765
" retreader 1118
" tread 958
" treading stand 367
" -Boston express 248
" -Williams-Bridge vulcanizer door 523
" " boiler 1139
" " building stand 361
" " heater press 495
" " improved heater press....497
" " kettle vulcanizer 1104
" " inner tube wrapper 766
" " rag roller 768
" " rebuilding stands 366
" " retreading kettle 1103
" " tread roller 1136
Alarms, tire 939
Alcemo tire chain attacher 993
Alderfer treads 966-967
Alkali reclaiming processes 1158
Allen gasoline storage system 126
" heater press 494
" inner tube skiver 776
" puncture fluid 1094
" quick opening heater press 495
" rag roller 768
" splice vulcanizer 788
" tire locks 912
" " tread 965
" tube splice vulcanizer 779
" tyrometer 937
" vulcanizer door 523
Alodium 1098
Altenberg treads 954-965
Aluminum branding plates 388
" molds 388
" retreading coils 1109
" tube mandrels 758
Amazon tread 954
" valley 73-75
America tread 952-957
American Bicycle Co. 59-60-62
" Congress of Road Builders 1153
" cotton tire fabric 171
" Dunlop Co. 38-60
" inner tube 717
" pneumatic chucks 441
" Society for Testing Materials....201
" Tire Corpn. tread 965
Ames pocket thickness gage 599
" rubber thickness gage 598
Anchorage, Stowe cord tire 484
Anderson tread 960
" vulcanizer 1131
Andrus spot vulcanizer 545
Angelican-Robinson splicing mandrel 780
Angle tread 951
Aniline oil 110-111
Annular cord tire machines 198
Anti-leak fluids 652
" -pinch inner tube 717
" -puncture 1092-1098
" -skid development, automobile 946
" -skids, detachable 969
" -skid tread functions 945

Anti-skidding devices 945
" -slipping devices, classes 947
Antimony sulphide 110
" sulphuret 108-112
Apollo cord web tube 715
Apperson 41
Applying levers, tire 915
Archer cord tire 288
" treads 956-958
Armor applier, Gottwals 310
" Kimball tire 929
Armorcord inner tube 716
" tread 966
Armored bicycle tire 652
" inner tire 935
" tire machinery 306
Armstrong tread 959
Arnold-Dunkerley braider 198
" tire safety valve 904
Artificial rubber 76
Artillery tire protector 977
Asbestos, powdered 78
" tire fabric 172
Ashland treads 963-964
Ashley wire wheel rim 820
Asphalt pavements 1151
" road binders 1150
Asphaltum, solid 114
Atco inner tube patch 927
Atkinson tread 965
Atlas metal disk feeder 309
Audindau impulse pump 871
Auerbach tread 965
Au-To air compressor 874
Autocrat tread 951
Auto-Pneu-Matic inner tube 710
" -Seal inner tube 722
" tread reclaim, white 112
" " stock 1170-1174
"Automobile," The 80
" anti-skid development 946
" " treads 945
" Club of America 1089
" " " Seine and Oise.....941
" development, rubber tires in....71
" Export Managers' Convention.1196
" introduction of 41
" production 1181
" registration 1178-1186
" Supplies Co. 66
" tire equipment 46
" tire manufacture, preliminaries..91
Automotive Wood Wheel Mfrs. Assn. 846
Avery fabric tester 207
Avon Rubber Co. 650
" tire builder 432
Axle construction, tandem 250
Bacher collapsible core 341
Bag, Johnson-Gammeter vulcanizing.....345
" McLeod " 348
Bailey, tread 949
" "Wont Slip" tread 45-947
Baker demountable rim 804-806-842
" Erle K. 841
" felloe bands 808
" rear truck wheels 888
" tire tester 607
" tread 960
" wood wheels 887
Balance, Jolly spiral spring 605
Balanced tire 232
Balata 112
"Balloon" tires 648
Banbury mixers 114
Band machines (See Strip and band machines)..
Bands outside tire 927
Bandage wrapper, Bridge Duplex.....454
Banner casing and tube builder.....439
" cord fabric impregnator 163
" improved tire builder 440
Barder vulcanizer door 534
Barium sulphate 111
Barnfather tire pump 872
Barrie tire pump 871
Bartlett, William Erskine 39-40
" clincher bicycle tire 656
" " " tire 39-52-62
" rim 788-790
" tire patents 39-40-51-52-53-64
Bartone engine-driven pump 866
Barytes 105
Base rings 95
Basle reclaiming process 1150
Bataille fabric dryer 1351
" solvent recovery apparatus 1352
Batavia tread 965
Batcheller internal pressure mold 877
" " tread 960
Batching green stock 1177
Bates, W. & A., Co.....650
Bath chair tires 1351
Bayne-Meredith cord tire winder 477
Bayne-Subers cord casing machine 463
" " " " tire winder 467
" " thread coater 1477
Beach Universal rim tool 921
Beacon tread 965
Bead adjusting device, Thropp.....329
" applying machinery 312
" buffing brushes 409
" cable tests 566
" centering device, Gammeter 329
" cleaning machine, Midgley 327
" compound, semi-hard 1130
" construction 185
" core machine, Johnstone 318
" " " Gillette 323
" cores 165
" " ground 1174
" drums 89
" dryer, McNeill 336
" fabric 164-165
" " specifications 1054
" " stripping 1175
" " tearer, Stevens 322
" making machines 89-312-315
Brucker wire former 324
Gammeter 329
Gillette wire core 323
Johnstone string core 318
Kuentzel 324
Seiberling-Slate bead mold 318
Stevens 320
Tyler-Nall 319
" molds 84-317
" placing rings 64
" Pratt cable 315
" presses (See Presses, bead) 64
" racks 59
" regular clincher 312
" reels 63
" ring clamper, Stevens 352
" straight side detachable 313
" tables 60
" trimmers 1163
Bridgewater 326
Johnston 1165
Maxwell 1167
Meir 326
Midgley 326
R. & D. 1167
" wire, braided 313
" " machine, Brucker 324
" " insulator 61
" " tests 566
" wrapping machines 324
Beading, old tires 1165
Beadless pullings 1174
Beads, Bartlett clincher 39
" building into tires 316

Beads, coreless 1173-1174
" insulating 89
" manufacture 312
" quick detachable 40-313
" stripping tire 1173
" types of 312
Be-Be-Co. twin rim 837
Becco tire grip 918
Beck tread 959
Becker reclaiming process 1163
" tread 967
Beckwith treads 956
Beer heater press 499
Beldam tread 954
Belden " 966-967
Bell leather tire mold 385
Bell-Stocks leather tread mold 385
Belt conveyor, mixing mill 113
Bench cans 140
Bender cotton 174
Benjamin tread 960
Benn engine-driven pump 863
Bennie tread 963
Bergstrom hub operated pump 873
"Berlin Bomber," cord tires 270
Berlin-Frankfurter bicycle tire 651
" " detachable rim 811
" " tire tester 611
" " tire valve 889
Bert mold 691
" tube vulcanizing mold 772
Best rim tool 920
Bestie & Bilger puncture fluid 1094
Bettern-Air 566-578
Bevelers, inner tube (See Inner tube bevelers).774
Bias cutter take-up, Stevens 285
" cutters 84-89
" fabric cutters 280-1102
Bolton vertical 284
Gordon-Birmingham 281
Schofield bias shear 280
" fabric looms 287
" " machines, Herzog 290
" " reel, Neal 286
" " shear, Schofield 280
" " strips, cutting 279
" fabrics 176-179-279
Bicycle anti-skid tires 945
" introduction of 35
" tire cores (See Cores, bicycle tire)...688
" " drums 661-665-668-669
" " fabrics 176
" " machinery 680
Bowerman machine 687
Bridge profiling calender 701
Dessau builder 683
Eccles side wire machine 686
Ellinwood air expeller 704
Forsyth endless wrapper 680
Gray endless wrapper 683
Hubbard builder 685
Huestis thread layer 681
Nivet-Haegg machine 686
Seiberling wrapper 682
Smith builder 684
tread drum, steel 701
Wright-Parker perforator 703
" " manufacture 660
air nipple molding 666
" tube making 665
building up, drum method 661-665
" " pole " 661
clincher 667-669
compounds 676
double tube 667-669
Dunlop wire edge 667-668-669
methods and materials 660
molding 664
single tube 661
specifications, Government clincher 669
Bicycle tire manufacture (continued)
splicing 662
split laced 667-669
testing 664
valving 663
vulcanizing 678
" " mandrels (See Mandrels, bicycle tire) 688
" " molds (See Molds, cycle tire vulcanizing) 690
" " poles 661-665
" " porousness 652
" " press vulcanizers (See Vulcanizers, cycle tire press) 694
" " repair 650-1087
" " valves 664-887
" " vulcanizer, Chamberlain 1111
" tires ....
British standards 643
cord 665
detachable wired-on 647-648
double tube 648-649-650-651-660-667-669
history 646
hose pipe 660-667-669
makes 647
puncture-proof 652
quick repair 649
sectional solid 647
self-inflating 647
single-tube 60-647-648-649-650-651-655-660-661
sizes 657
solid 648
Tillinghast single tube 648
tubeless 655
" tubes, butt-ended 649
" wheel rim, standard 61
Biggs built-in tube vulcanizer 769
" inner tube vulcanizer 769
" retreading " 1106
Biko 1098
Billet-Couverchel tread 969
Biltwell tread 906
Bins, aging 117
" stock 83-90
Birch cloth stretcher 227
" treads 961
Birmingham tread machine 296
Blaisdell abrading machine 304
" rubber strip winder 305
Black emergency wheel 837
Black Hawk tread 961
Black & Decker air compressor 875
Blekre treads 962-963-964-965-966
Blow-out chain, Dobbins 920
" patches 579-922-1037
assembling 588
calendering 588
cutting 588
makes 922
manufacture 586
rubber compound for 588
specifications 1055
types of 586
vulcanizing 588
" repairs 1042-1046
Blower patent inner tube 723
Blowers treads 958
Blue-flame repairs 1064
Blynt tread 954
Bobbin winders 453
Bogan tread 954
Boggs punctureless inner tube 721
Boilers 1137
Bolton bias fabric cutter 284
Boothroyd, A. 42-56-60
" cushion bicycle tire 648
Boots, tire 927
Boston-Akron express 248

Boston Woven Hose & Rubber Co. ..59-61-64-653
Bonner inner tube 722
Bourdin weftless fabric loom 478
Bourdon-Douris inner tube 720
Bowden tube machine 747
Bowe Tire Valve Co. 902
" tire valve 902
Bowerman cycle tire machine 687
Bowling Green treads 961-966
Bowser portable cement tank 143
Boyer tire chains 991
Bracey tire core 569
Brackets, spare tire 911-912
Braden tread 958
Braender tread 902
" Bull Dog tread 950
Braided wire bead cores 135
Braid, wire bead 318
Branding plates, aluminum 388
Brazilian rubber 73-75
Breaker fabric 181-188
" " specifications 1058
" " strength standards 184
" " wire 179
" strip widths 1079
Breaking down rubber 87-89-102
" test, rubber 605
Braiders, fabric
De Leeuw circular 196
Dunkerley-Arnold 198
Fisher 198
Brickley tire tool 918
Brictson tread 952-979
Bridge-Akron-Williams vulcanizer door 523
Bridge carcass builder 421
" cloth wrapper 449
" Duplex bandage wrapper 454
" fabric stretcher 287
" inner tube beveler 775
" " " machine 751
" " " wrapper 766
" jack 359
" -Nuttall heater press 504
" "Open Gap" wrapper 447
" profiling calender 701
Bridgewater tire bead trimmer 328
Bristol recording gages 534
British commercial vehicle tires 644
" Engineering Standards Assn. 642-853
" garage vulcanizer 1122
" Rubber Tyre Mfrs.' Assn.....853-642
" Society of Motor Mfrs. & Traders ...642
" steam mandrel 1125
" tire standards 642-643
" tube testing tank 1141
Broeck tread 963
Broken threads in fabric 187
Brooks spare tire case 914
Brown, A. T. 37
" impulse pump 870
" inner tube mandrel 760
" Kirk 61
" recording thermometer 533
" scientific inner tube 722
" -Stillman wired tire 37-38
" vulcanizer 1022
Brucker bead wire former 324
" fabric strip feeder 402
" Ferdinand B. 400
" tread roller 303
Bruess treads 959-966
Brunner air compressor 876-877
Brunswick-Balke-Collender treads 958-959-962
Brunswick treads 952-953
Brusher, Heath vertical 225
Brushes 90-406
" Osborne wire wheel 406
Bryant detachable rim 811
" tire tool 917
" vacuum cup reliner 930
Buckleton, Ernest E. 62
Buckley treads 955-959-960-962
Buckskin tread 950
Buffers, tire finishing 543
Buffing beads 405
" for rebuilding 1077
" machines 1101
" stands 1135
" tires 90
" tread bands 405
" tubes 90-405
Buffings 1174
Building cores (See Cores, building and vulcanizing) 331
" tires, method 396
" fabric 181-188
" " specifications 1057
" " strength standards 184
" machines, cycle tire
Deacon 683
Hubbard 685
Smith 684
" machines, tire 46-410
Avon 432
Banner casing and tube 439
" improved 440
Bridge carcass 421
Converse-Kress 425
Crosby 417
Dew 420
Doughty calender and builder....424
Edmonds 419
Fisher-Price 433
Goodyear 68
Hermann 435
Knight 434
Kremer fabric shaping 430
" " tensioning 431
" stitching 432
Lister 429
MacIntosh casing 411
Mathern fabric laying 415
" improved 436
Miller automatic 421
Paridon 430
Rowley 414
Schaffer builder and loom.....458
State tire shoe 413
Stevens casing 428
Thropp-De Laski 429
Vincent 410
Whalen 418
Building stands (See Stands, building) 81-89-357
" tables 87
" tires 895
" " patented methods 899
" up bicycle tires 661-665
" " for cord repair 1067
" " motorcycle tires 671
" " in rebuilding 1062
Bull's Eye tire tread 987
Bureau of Foreign and Domestic Commerce 1187-1195
" " Railway Economies 1177
" " Standards 638
" " " fabric tests 303
" " " tester head 210
Burdin cord fabric spreader 151
Burke tire valve 909
Burlap wrapper, T. & W.....557
Burling fabric 187
Burrill rim tool 919
Burrows emergency wheel 837
Buoyancy of cord tires 234
Bus lines replacing trolleys 1204
Butt-end tube press, Nall 773
Butt-ended bicycle tubes 649
" " inner tubes (See Inner tubes, butt-ended) 707
Byrne mold 376

Bywater naphtha storage system 139
C.W.C. demountable rim 806
C.B.Q. inner tube patch 927
Cable bead cores 185
" " Pratt 315
" " tests 596
" " wire, endless 83
" beads 316
" cord tire repair 1067
" " tires 229
Cabling machine, Sloper 460
" threads 186
Calender and builder, Doughty 424
" Bridge profiling 701
" control, General Electric 129
" roll adjustment, Vaughn 124
" rolls, power adjustment 124
" room 83-119
" spreader, Thoma 154
Calendering 118
" blow-out patches 588
" fabric 87
" multiple 125
" thread fabric 186
Calenders 79-83-87-89-91-118
" attachments for 126
" Kearns multiple friction 125
" power for 83
" Seiberling friction 126
" standard three-roll 118-120
" stock-shell for, Universal 128
" tension device for, Tyler-Nall....127
Caliper gages, Midgley fabric 127
Cederstrom fabric aging rolls 127
Calipers, tire (See Pressure gages) 936
Camel back, applying 1063
" " tread gum 1081
Camel's hair yarn 180
Cameron slitter and rewinder....583-742
Campbell puncture fluid 1093
Cans, acid 90
" cement 88-89-140
" gasoline 88-89
" McNutt bench 140
" soapstone 90
" supply room cement 141
Canvas (See Fabric) ....
" tire tread 987
Capelle-Latour thread coater 167
Cape Noire tire 982
Capitol tread 953
Carberry rim patent 841
Carbon dioxide tire inflation 883-884
" black 103-110-111-112
Carbonic acid gas 884
Carcass building machines (See Building machines, tire) ....
" laying machines, cord tire (See Cord laying machines) 463
" moisture 232
" repair for rebuilding 1076
" roughing 408
Care of inner tubes 1012
" " tires 998
Carded Egyptian cotton 182-183-184
Carding cotton, humidity in 180
Carlisle cord tire 237
" " " apparatus for making 477
Carll tire racks 550
" rubber cooling racks 98
Carriage tires 43
Carriers, spare tire 911
Car Spring tread 950
Carter fabric impregnator 159
Carrying capacity tables 621-623-627-631
Casette 935
Casing machine, Subers 196
" repairs, permanent 1038
" vulcanizer, sectional 1050
" vulcanizing 537
Cassco engine-driven pump 864
Catalyzers 110
Caucho rubber 108
Cave quick change rim 793
Cell dryer 224
Cement, applying 142
" building 88
" cans 88-89-140
" churns (See Churns, cement)..84-88-134
" compound 131
" cups, fireproof 140
" filling tubes with 136
" fire hazard of 136
" formulae 145
acid cure 1059
bicycle rim 146
cycle tire repair 146
Gutta percha 131-146-147-148
hard 146
leather tread 145
pneumatic tire 145
rubber 145-147-148
self-vulcanizing 147
solid tire 145
vulcanizing 1059
" house 137
" making 132
" mixing room 84
" quick drying 147
" rubber 79-121
" specifications, U. S. Army 144-1059
" squirts 915
" storage 135
" tanks, portable 142
" tube filler 136
" vulcanizing 143
" U. S. Army specifications 144
Cementless patches 1028
Central American rubber 74-108
Century tread 952
Ceylon rubber plantations 75
Chafing fabric 181-184
" " strength standards 185
Chain tools, tire 992
Chains, anti-skidding 988
" cross shoe 990
" Dobbins blow-out 929
" proper use 1008-1014
" sectional 990
" tire 45
Chalfant-Haun core 341
Chambered bicycle tire 652
Chamberlain cycle tire vulcanizer 1111
" tube splicing mandrel 778
Chameroy Vesinet tread 985
Champion building stands 364
Chandeyson, U. 1175
Change-overs, solid to pneumatic 264
Chapman electric neutralizer 154
Charting the cure 527
Chase bicycle tire 654
Chatillon tube scale 548
Chemical laboratory 605
" rubber 1098
Chemico blow-out patch 925
Chemist, chief 606
Chemistry, road building 1153
Chevrolet rims and wheels 837
Childs collapsible core 838
Chillicothe tread 966
China clay 110
Christie demountable rim 794
Christy tread 961
Chucks, American pneumatic 441
Churns, cement 84-88-134
Eimco 134
Patterson vertical 135
Portable 135
power for 135
Quin 134

Churns, cement (Continued)
triplex mixer 135
Cincinnati speedway 594
Circular braiders (See Braiders fabric) .....
" looms (See Looms, fabric) .....
Clamps, thumbscrew 915
Clark Cycle Tire Co. 891
" valveless inflator 891
" treads 963
Cleaning machines, core (See Core cleaning machines) 353
Clement Company 561
Clerget tread 972
Cleveland Rubber Corpn. tread.....965
" Standard tread 953
" tread 962
Clifton inner tube 706
Climax compression tube 722
Clincher bead construction 185
" " regular 312
" bicycle tire 667-669
" demountable rims (See Rims, demountable clincher) 792-793-803
" motorcycle tire 671
" rims 46-789
" tires, Continental 39
" " Bartlett 39-52-63
" " G. & J. 40-62
" " Michelin 40-53
" Tire Mfrs.' Association 635
" tires, patentees 70
Closz spare tire carrier 913
Cloth and paper wrapper 455
" inspector, C. & M. 222
" measurer, Parks & Woolson 226
" rubber tester, Scott 214
" stretcher, Birch 227
" unwrapping machines (See Unwrapping machines, cloth) .....
" wrapping machines (See Wrapping machines, cloth) 443
" yarn quadrant, Lowinson 220
Clough, Albert L. 620
Coating machine, Hammel tire 547
" " Subers 158
" machines, cord fabric (See Cord fabric and coating machines) 478
" " thread (See Thread coaters) 164
Cobb fluid pressure core 347
Coesir cord or strip wrapper 472
Coffey, J. H. 400
" tire molding press 516
Coffield tire protector 933
Cohesive attraction 131
Cold cure tube repair.....1025
Cole collapsible core 342
Coleman collapsible core 340
Colonial tire sizes 642
Color in tire stocks 103
Colorado tread 979
Columbus flat tire alarm 905
Combination tread 952-958
Commercial division, laboratory 596-600-606
" vehicle tires, British 643
" " " pneumatic 639-640
" " " solid 639-640
" " " standards .637-638-639-640-843-849-851-853
Compagnie General reclaiming process 1162
Competition, foreign tire 1192
Compound boxes 104-106
" cements 132
" room 87-88
" scales 104
" weighing machines 105
Compounding department, laboratory 600
" ingredients 102-103-108-113
" rubber 87-102
Compounds 110-278-1058
beads, semi-hard 110
bicycle tire 678
blow-out patches 588
cord tire, Government 278
cushion stock 111-278-1058
formulae 110
friction 111-278-1058
Government cord tire 278
inner tubes 725
mixing 87-113-114
motor tire 107
retread bands 1059
rubber replacing fabric 188
seams 1058
side wall stock 112-278-1058
skim 111
tread stock 112-1058
tube repair stock 1058
" stock, cured 1059
Compressed air in tires .....5[illegible]
Compression inner tube 721
" tire 28
Compressors, tire plant air 84
Congo rubber 108-111
Congress tread 949
Constrictive fabrics 178
Constrictive weave 178
Consumption of tires 1187
Containers, McNutt cement .....14[illegible]
Continental aeroplane tire 269
" bicycle tire 651
" Caoutchouc Co. .....4[illegible]
" " & Gutta Percha Co...621
" clincher tire .....39-4[illegible]
" demountable rim 799-807
" motorcycle tire 655
" (Gilbert) rim 822-825
" Rubber Works .....60-61-26[illegible]
" spare tire case 924
" tire 982
Control devices, vulcanization 528
Bristol recording gages 531
Brown recording thermometer 533
Edson recording alarm 535
Fisher reducing valve 532
H. & M. thermometers 533
Honeco temperature controller 535
Hydraulic accumulator system 536
Powers temperature regulators 535
Stratton steam separator 532
Tagliabue system 528
" division, factory laboratory .....59[illegible]
" General Electric calender 129
" steam 527
" vulcanization 526
" of vulcanization, automatic 527
Converse-Kress tire builder 425
" tread 951-953-958
Conveyor, mixing mill 113
Cooling tables 83-117
" racks, Carll rubber 98
Cooper tread 963
Copithorn wire wheel rim 921
Corbett-De Coursey electric vulcanizer 1025
Cord airplane tires 659
" bicycle tires 665
" builder fabric specifications 1058
" construction, economy 47
" " large 261
" dryer, Tew impregnator and 168
" fabric and coating machines .....
Bourdin weftless loom 478
Marquette 481
Pye 476
Seiberling cord strip 480
" fabric impregnator, Banner 163
" " machine, Hyatt 469
" " spreaders 151
Burdin 151

Cord fabric spreaders (continued)
Turner, Vaughn & Taylor.....152
" " strip machine, Seiberling 480
" " tires 229
" " tire repair 1066
" fabrics 229-241
advantages 243
Lister 245
Musselman (Pye patent) 245
standard 241
Subers 244
" flattening machine, Sloper 460
" forming machines 459
Gray-Sloper tape former 461
Sloper cabling machine 460
" cord flattener 461
" " twister 459
" rewinder 460
Tew flat tubular cord machine 462
" impregnators 164
T w 168
" hollow cord 169
Hoover 170
" laying machines 463
Bayne-Meredith tire winder 470
" Subers tire winder 467
Carlisle apparatus 477
Coesir cord or strip wrapper 472
Dees 472
Denman tire winder 473
Dickinson automatic 476
Harris cord wrapper 471
Hvatt endless fabric 469
Kline 475
McLeod 473
Palmer 464
Silvertown 466
Swain 463
" improved 463
" measuring device, Hubbard 484
" rubber fabric tester, Scott 218
" sections, removal and insertion 1068
" tape former, Gray-Sloper 461
" tire carcass machine (See Cord laying machines) 463
" " core (See Cores, cord tire)
" " inner tubes 724
" " machines, annular 198
" " machinery 459-483
" " repair patches 1071
" tires 229
accomplishments 48
advantages 232
airplane 268
bouvancy 234
cabled 229
commercial vehicle 640
cross section 234
even tension 233
flexibility 233
frictional heat 233
history 234
inflation 234-628-629
makes 235
oversize 627
Peeler cotton for 229-241
reduce tire bills 230
repair 1066-1067
resilience 233
resistance 233
specifications, Government 274
treads 45-962
" truck, tire advantages 48
" twisting machine, Sloper 459
" wrapper, Coesir 472
" " Harris 471
Cordell patch buffer 1030
Cords, testing tire 602
" warp 185
Core cleaning 409
Core cleaning machines 353
Gammeter core revolver 355
Killian 353
Wheeler 356
" Dees expansible 501
" flanges 349
" Hirsch expanding 1127
" lock, Kuhlke 341
" method, motorcycle tire making 671-672
" pads 349
" " Darrow 350
" " Semple 350
" racks 89
" remover, Gillette 351
" rings 349
" State 68
Cores 84-89
" bicycle tire 688
Gleason fusible 689
Morgan & Wright 688
" braided wire bead 185
" building and vulcanizing 330
Adamson collapsible 340
Bacher " 341
Chalfant-Haun sheet metal 341
Childs collapsible 333
Cole " 342
Coleman " 340
DeMattia " form 343
Duplex " 336
Hinman " 334
Horton-Wagner 341
Kuhlke collapsible 338
" " core lock 341
Mather collapsible 339
Midgley " 342
Naylor " 341
Simplex " 338
State " 331
Stiles-Vemiker collapsible 332
Thropp tire core 330
" improved collapsible core ..331
Walton collapsible 341
" interlocking collapsible 337
Wood-Milne collapsible 343
V S K. " 335
Young removable 331
" cable bead 185
" collapsible 84
" cord tire 483-484
Sloper 483
" Improved 484
Stowe core and anchorage 484
Tew carcass form 485
" inner tire (See Inner tires and cushions) 567
" internal pressure 344
Cobb collapsible fluid pressure 347
Dees " " " 344
" mechanical pressure 345
Denman collapsible fluid pressure 346
Gammeter 346
Gray expansible mandrel 344
Gummer " " 349
Johnson-Gammeter vulcanizing bag ..345
McLeod vulcanizing bag 348
Cork filled tire 996
" fillers 573
Corona tread 965
Corson, H. C. 62
Cort detachable non-skid 977
Cost accounting, raw material 94
Cost, tire fillers 578
" truck tire equipment 250
Costs, factors governing tire 94
Cotton, Alabama 174
" Arizona 171-175
" Arkansas 174
" Bender 174
" California 175-176

Cotton, carded Egyptian 182-183-184
" carding, humidity in 180
" combed Egyptian 182-183-184-185
" consumption for tires 174-175
" Durango 175-176
" Egyptian 171-174-175-176-182-183-184-185-661
" Georgia 171
" embargo 174
" fabrics, substitutes for 171
" Florida 171
" Imperial Valley 176
" imports 174-175
" Louisiana 174
" long staple 171-174-175-176-661
" Mexican 175
" Mississippi 174
" Peeler 171-229
" Pima 175
" planting 175
" production 174
" Sea Island 171-173-174-175-182-183-184-185-661
" Sakellaridis 182
" Southwestern 174-175
" supply 174
" tire fabrics 171
" wax in 171
Council of National Defense 636
Count scale, fabric 201
Covers, spare tire 912
Cowen mold 691
Cowley flat tire alarm 905
Cox reclaiming process 1162
" tire cushion 935
Coy tread 950
Cracker-washers 88
Cracking bars 90
Crescent (Royce patent) rim 799
Cri-Cri tire alarm 906-939
Crimp, fabric 180-187-188-189
" tester, Gadsby-Walen 213
" tester, warp-filler 212
Crimping 185-186
Crockford puncture fluid 1096
Crompton & Knowles loom 189
Cromwell tire protector 972
Crook tread builder 295
Crosby tire builder 417
Cross section cord tire 234
" " " tire construction 177
" stands 90
" wrapping tires 1083
Crow tread 966
Crowley tread 956
Crude rubber consumption for tires 1180-1183
" " drying 78-87
" " inspection 87
" " washers 78
" " washing 78-87
Cups, fireproof cement 140
Cupples tread 952
Cure, charting 527
" double 67-537
" open steam 67
" single 67-537
" testing the 1052
Cures, Government specifications 1059
Curing bags, steam 1125
" drums, flap 585
" hints 1070
" rebuilt tires 1081
" rims, split 1089
Current inner tube roller 753
Curtis air compressor 874
" " filling station 875
Curtis & Marble cloth inspector 229
" " " fabric smoothing rolls 225
Cushion bicycle tires .....[illegible]
" compound .....[illegible]
" " cord tire .....[illegible]
" stock compounds .....[illegible]
Cushions, inner tire .....[illegible]
Cushman, Atherton S. .....[illegible]
Cuts, plastics for casing .....[illegible]
Cutter, Peerless section .....[illegible]
Cutters, bias fabric (See Bias fabric cutters) [illegible]
" paper .....[illegible]
" rubber .....[illegible]
" strip (See Strip cutters rubber) [illegible]
Cameron slitter-rewinder .....[illegible]
Nall-Tyler .....[illegible]
Pfister-Addyman .....[illegible]
Quinn inner tube .....[illegible]
Cutting, bias fabric strips .....[illegible]
" blow-out patches .....[illegible]
" dies, pad .....[illegible]
" down for rebuilding .....[illegible]
" fabric .....[illegible]
" machines .....[illegible]
" machines, fabric .....[illegible]
" " rubber .....[illegible]
" tables, rubber .....[illegible]
Cycle tires (See Bicycle tires)
Cycle tire rim .....[illegible]
Cycling, increasing popularity of .....[illegible]
"Cyclist, The" .....[illegible]
Cyco 1093-1095
Dahl punctureless tire .....566-57[illegible]
Daisy tread .....[illegible]
Darracq company .....[illegible]
Darrow tire core pads .....[illegible]
Daling rubber tires .....[illegible]
Davies tread .....[illegible]
Davis, J. Edwin .....[illegible]
" steel tire armor .....[illegible]
Day sectional casing .....[illegible]
" tire valve .....953-95[illegible]
Dayton tread .....[illegible]
DeFonier tread .....[illegible]
DeLaski circular loom .....[illegible]
" detachable rim .....[illegible]
" & Thropp Circular Woven Tire Co. [illegible]
" Thropp tire making machine.....[illegible]
" " wrapping machine .....[illegible]
DeLaunty engine-driven pump .....[illegible]
DeLeeuw circular braider .....[illegible]
DeMattia building form .....[illegible]
" tread 840-841
DeMunger, Louis F. .....[illegible]
DePalma .....[illegible]
DeVillers reclaiming process .....[illegible]
Debauge reclaiming process .....[illegible]
Decauville wrapping machine .....[illegible]
" heater press .....[illegible]
Defiance tread .....[illegible]
Deflating machines .....[illegible]
Deflation signals .....[illegible]
Deflator, McClenathen inner tube .....[illegible]
Deflection test, automobile rims .....[illegible]
" tire .....[illegible]
Dees fluid pressure core .....[illegible]
" cord laying machine .....[illegible]
" cord tire .....[illegible]
" expansible core .....[illegible]
" heater presses .....[illegible]
" internal pressure mold 371-501
" McLeod mold .....[illegible]
" mechanical pressure core .....[illegible]
Delion tread .....[illegible]
Demo tire pump .....[illegible]
Demountable clincher rims .....[illegible]
" clincher rims, split 792-793-803
" Q. D. rims 830-831
" rims 46-535
" straight-side rims, split 906

Demountable truck tire rims 880
" wheels 834
Denman fluid pressure core 346
" cord tread 953
" (Miller) cord tire 237
" tire winder 473
" tread 956-960-961-963-964
" yarn impregnator 168
Depreciation, roads and loads 258
Desclée tread 973
Design, truck tire 45-254
Dessau cycle tire builder 683
Destribats vacuum fabric impregnator 1567
Detachable rims 838
" rims, quick 795-809
" tires 66
" wired-on bicycle tires 647-648
Detachers tire 916
Detroit compounding scales 104
" demountable rim 803-806-842
" engine-driven pump 865
Dettling, J. J. 1175
Development division, laboratory 596-600-606
" pneumatic truck tire 261
Devine fabric impregnator-dryer 161
" solvent recovery apparatus 161
" spreader 151
Devoll puncture proof tire 996
Dew fabric-less tire patent 173
" tire builder 426
Dewey spark plug pump 869
Dexter flap builder 584
" " curing drums 585
Diamond (Marsh patent) rim 795
" (") Q. D. rim 812-825
" "Grip" tread 982
" rim patents 841
" Rubber Co. 38-44-45-62-884
" squeege tread 949
" tire tools 915
" tires 47
" wedged-on-rim 796-797-806
Dickey, Charles T., ...400
Dickinson cord tire builder 476
" " " 239
" tread 958-961-962-963
" tubular fabric loom 197
Dies, pad cutting 90
Dig-U-Out mud shoe 992
Diluents 108-109
Dimensions, airplane tires 272
Dimple tread 950
Direct drives 83-88-89-90
Disk feeder, Atlas metal 309
Disks, fisher fabric stretching 405
Disteel wheels 818
Distribution of gasoline 138
Dittenhoefer inner tube 712
Dobbins blow-out chain 929
Dodge, Theodore A., ...56-59-60-61-62
" car Stanweld rim 807
Doors, vulcanizer (See Vulcanizer doors) 521
Dorian collapsible rim 802
Double cure 537
" Seal tire valve 900
" service non-inflatable tube 569
" tube bicycle tire 648-649-650-651-660-667-669
Double tube motorcycle tire 671
" " pneumatic tire 56
Doughty expansible mold vulcanizer 697
" fabric strip loom 192
" former-vulcanizer 694
" hand press vulcanizer 696
" inner tube machine 748
" press vulcanizer 511
" tire calender-builder 424
" tube vulcanizing press 698
" vulcanizer-mold 695
Douris-Bourdon inner tube 720
Dow demountable rim 801
Dow non-deflation tube 719
Downes tread 962
Dreadnaught tread 950-951-957
Dri-Kure truck tire retreader 1124
Drives, direct 88-89-90
Driving, careful 1010-1015
Dropped ends in fabric 187
Drouilly 886
Drums, bicycle tire 661-665-668-669
" method, bicycle tire making 661
" " motorcycle tire making ..671-672
" Universal tire machine 128
Drums, flap curing 585
" steel tread 701
Dry kiln 88
" weight, fabrics 204
" " oven 204
Dryer, Bataille fabric 158
" cell 224
" Devine tire fabric 161
" Farrell six-roll 223
" Shaw tire fabric 161
" Tew cord impregnator 168
" vacuum 78-100
Dryers, fabric 83-87-88
" rubber 87
" Hunter dry kiln 100
" Hurricane 100
Drying apparatus 83
" " bead, McNeill 326
" crude rubber 78-87
" fabric 87-88
" racks, Carll rubber 98
" room, hot air 98-100-104
" rubber 87-98
Dual pneumatic tires 254
Dubey paper wrapper 559
DuCane puncture fluids 1096
Duck (See Fabric) .....
Ducos air-less inner tube 569
Duersten treads 963-964-965
Duncan overhead carriers 390
Dunham tread 956
Dunkerley-Arnold braider 198
Dunlop butt-ended tube 708
" clincher bicycle tire 651
" demountable wheel 836
" John Boyd 35-36-49-70
" -Keegan stud applier 310
" -Macbeth airplane wheel 846
" " mold opener 393
" " tread mold and press 377
" " tube machine 739
" " " mold 772
" -Moseley suit 51
" North British suit 52
" Pneumatic Tyre Co. Ltd., 36-37-38-39-40-50-51-52-53-54-55
" Rubber Co., Ltd. 36-650
" studded tire 982
" tires 35-36-38-49-54-55-57-707
" " patents 35-36-49-51-70
" " rims for 812-823
" " valve 889
" traction tread 950
" tread 958-967
" " rim 269-788-791-806
" -Welch tire patent ..38-50-51-788-806-810
" wire edge bicycle tire 667-668-669
Dunn Hydro air compressor 875
" self healing tire 1097
Duo tread 951
Duplex collapsible core 336
" inner tire 567
Durability, tire 45
Dur-a-bul blow-out patch 924
Durand tread 970
Durango cotton 175-176
Duryea, Charles E., ...30-611-619
" Never-Leak 1094
" resiliometer 611

Duryea tire valve 901
Dust cap, Schrader 892
" caps, tire valve 907
Du Tell puncture finder 940
Dykes mandrel 1126
" peelings 1170-1174
" reliner mold and vulcanizer 581
Dynamometer, Firestone 615
" tests 591
Easy-On blow-out patch holder 924
" " tire chains 990
East Palestine Rubber Co., ... 66
" " treads 956
Eau Claire stand 362-364
Eccles side wire machine 686
" tread applier 301
Eckrode tread 963
Economies, truck transportation 258
Economy, cord truck tire 48
Edge, S. F. 632
Edmonds tire, builder 419
Edson recording alarm gage 535
Edwards treads 953
Efficiency, tire 30-31-32
Egbert tread 962
Egyptian cotton 171-174-175-176-182-183-184-185-661
Eight wheel trucks 248
Eimco cement churn 134
" enclosed mixer 115
Elastes 564
Elastic fabric, Jappe 280
" limit of yarn 180
" tire filler 566-578
Elasticity in fabric 180-181
" of thread fabric 186
" -strength tester, Suter 219
" test, rubber 605
" tire 27
Elastro 565
Elder puncture fluid 1096
" " proof tire 996
Electric mold, Price 376
" neutralizer, Chapman 154
" power, tire plant 81
" vehicle tire, Palmer 236
" " " tests 592
Elkins hose clamp 882
Ellinwood air expeller 704
" -Miller tube machine 747
Elliott, Sterling 58
Embargo on cotton 174
Embossing press, Roovers 392
Empire demountable rim 799
" disk tread 986
" treads 949-950-953-962-963-964
Enemies of fabric 998
Enemies of rubber 998
Energized tire machinery 304
Engineering department, mechanical 606
Englebert non-skid tire 979
Engraving machine Gorton mold 388
Equipment, original automobile tire 631
Erie tread 960
Essenkay tire filler 566
Essex blow-out patch 923
Eureka air compressor 876
European tire size anomalis 644
" " standardization 641
" valve equipment 897
Everlastic 578
Ever Ready tire tool 917
Ewald tire retreader 1140
"Examination of Bituminous Road Binders" 1153
Exchange rates, tire and 1191
" situation, foreign 1189
Expander, Hibbs 1127
Expansion, tire 28
Experiments, fabric-less tire 173
Export tire outlook 1188
Exports, U. S. tire 1187
Eyre anti-skid 969
E-Z detachable rim ..... 8[illegible]
Ezeride ..... 56[illegible]
F & H detachable rim ..... 81[illegible]
F. M. S. rubber plantations ..... [illegible]
Fabric, aging rolls, Cederstrom 237
" American cotton tire 171
" applying rubber to ..... 14[illegible]
" asbestos tire ..... 17[illegible]
" band coater 158
" " machines (See Strip and band machines) .....
" " stretcher 158
" braiders (See Braiders, fabric) .....
" breaker 181-182
" broken threads in ..... 18[illegible]
" building ..... 181-18[illegible]
" burling ..... 18[illegible]
" calendering ..... 87-18[illegible]
" chafing 181-184
" cleaner, United Electric 228
" coating machines, cord (See Cord fabric making and coating machines) ..... 47[illegible]
" count scales ..... [illegible]
" -cord-rubber tester, Scott ..... 21[illegible]
" crimp 180-187-188-189
" cutters, bias (See Bias fabric cutters) 240
" cutting ..... 8[illegible]
" determinations 204
" dryers 83-87-88
Bataille ..... 15[illegible]
Devine ..... 16[illegible]
Shaw ..... 16[illegible]
" drying 87-88
" elasticity in 180-181
" enemies ..... 99[illegible]
" feeding devices ..... [illegible]
" filled tire ..... 99[illegible]
" filling contraction ..... [illegible]
" finishing ..... 1[illegible]
" flax tire 171-172
" flexifort ..... 5[illegible]
" flexing breaks the ..... 2[illegible]
" friction ing 122
" gage 181-183
" hemp tire 171-172
" impregnators ..... 15[illegible]
Banner ..... 16[illegible]
Carter ..... 15[illegible]
Destribats vacuum ..... 15[illegible]
Devine ..... 16[illegible]
Kremer ..... 16[illegible]
Shaw ..... 16[illegible]
Smith ..... 15[illegible]
Thropp ..... 16[illegible]
" impregnating 94-97
" inspector, P. & W. 222
" irregularities ..... 2[illegible]
" Jappe elastic 28
" laying Machines (See Tire building machines) .....
" linen tire 171
" load stretch relations ..... [illegible]
" looms ..... 46-18[illegible]
" machines, tubular (See Tubular fabric machine) ..... 1[illegible]
" making machines, cord (See Cord fabric making and coating machines) ..... 47[illegible]
" Midgley caliper gages ..... 12[illegible]
" pad molds, Satterthwaite 375
" Palmer tire ..... 3[illegible]
" percentage in tires 175
" plies, starting 1169
" preparation, stripped 1174
" progress through factory ..... 8[illegible]
" pulled tire 1174
" puller, R & D 1169

Fabric, ramie tire 172
" reclaiming 1157
" repairs, inside 1040
" rolling devices 401
" shaping devices 401
" shaping tire builder, Kremer 430
" sheeting with rubber 124
" side wall 184
" silk tire 172
" skim-coating 124
" slitting 87
" " machines 87
" smoothing rolls, C & M 225
" specifications ....
bead 1058
breaker 1058
building 1057
cord builder 1058
" spreading 84-87
" " thread 186
" square woven 178-189
" stepping down 1066
" stitching devices 401
" storage 87-88
" strength 181-182-187
" stretcher, Bridge 287
" stretching devices 401
" strip machines (See Strip and band machines) ....
" stripper, Hibbs 1170
" stripping bead 1173
" strips, pulling 1169
" substitutes for cotton 171-188
" take-up 181-182
" tapes 181-186
" tensile strength 202
" tensioning devices 401
" " tire builder 431
" tests, tire 200-203-596
" " specimens 202
" testing machines ....
Avery 207
Bureau of Standards 210
Jury autographic 220
Schopper 208
Scott autographic 216
" cloth-rubber 214
" fabric-cord-rubber 218
" horizontal 211
Suter strength-elasticity 219
" " methods 87-182-200-201
" texture 181-183-184
" thickness 202
" thread 181-185-186-234
" " bead 185
" tires ....
disadvantages 230
moisture in 122
resilience 230
thread 229
" trade marker, P & W 191
" water content 181
" weaves, types 176
" weaving 187
" weighing 87
" weights 181-183-185
" widths 188
" wire breaker 172
Fabric-less tire experiments 173
Fabrics bead 184
" bias 176-179-279
" bicycle tire 176
" cleanliness 187
" constrictive 178
" cord (See Cord fabrics) 229-241
" cotton consumption for tire 174-175
" dropped ends in 187
" dry weight 204
" flexibility of 181-184
" inspection 87-187-188
Fabrics, mending 187-1039
" off-square 188
" Osnaburgs 181-183-186
" packing 187
" pneumatic tire 171
" preparing and handling 222
" salvaged grades 1173
" sheetings 181-186
" standard strengths ....
breaker fabric 184
building " 182
chafing " 185
" " tire 181
Factory control division, laboratory 596
" laboratory organization 595-606
" manager 606
Faircloth tread 954-955
Falconnet-Perodeaud 948
" " tread 905
Falls tread 950-953
Fane tire patent 55
Far East plantations 73
Farrell heater press 493
" six-roll dryer 223
Fastening, interior rim 791
" Silvertown rim tape 810
" Welch tire 37-49-50
Fastenings, mechanical 790
" tire rims and (See Rims and fastenings) 787
Faults, correcting weaving 188
Fawkes mold 691
Fearnaught burst tire protector 926
Federal treads 950-951-953
" tires 47
Feeding devices fabric 401
Felloe band, Baker 808
" " dimensions 851-825-853
" " standardization 842
" " traction plate dimensions 853
" " tolerances 848
" dimensions, wood 846
Fenton air bag 1108
" inner tube roller 754
Ferdinand, A 903
" pressure indicator valve 903
Fero air compressor 876
Fiber treads 986
Fidelity tread 964
Fiedler fabric shaping device 401
Fillers, rubber compounding ..103-108-109-110-114
" sponge rubber 570
" tire 560
advantages and disadvantages 560
cork 578
cost 578
filling devices 561
formulae for 574
hydraulic filler press 562
in the World War 560
liquid 561
solid 565
Filler-warp crimp tester 212
" yarns 184
Filling mixed 187
Finishing machinery, tire 541
" stands (See Stands finished ....
" tires 90
" " fabric 187
Finlayson non-skid mold 382
Fire apparatus tires 45
" hazards of cement 136
Fireproof cement cans 140
" " cups 140
Fires, steam smothering jets 137
Fire sprinklers, cement house 137
Firestone dynamometer 615
" endless air bag 1109
" rear truck wheels 837
" repair patch 1028
Firestone rims ...796-797-806-815-821-822-831-842

Firestone Tire & Rubber Co.....68-69-839-840-842
" tires 47
" " building machine 68-69
" treads 949-951-960
" wood wheels 837
Fisher cord tire 840
" fabric braider 198
" fabric stretching disks 405
" -Price tire builder 433
" reducing valve 532
" sub-casing 934
Fisk boiler 1137
" cold press 67
" hot heater 1137
" Premier bicycle tire 654
" rims 797-830
" Rubber Co. 67-68-623
" separable rim 792-797
" tires 47
" treads 949-958-959-962-965-967
Fitting tires 1002
Fitzsimmons puncture proof tire 996
Flanges, core 349
" Stultz building 349
Flap building machines 87-90-579-583-584
" construction 586
" curing drums 585
" making tables 90
" manufacture 90-582
" molds 90
" trimmer, Midgley 580
" vulcanizer, Marshall 580
Flaps 579
" Government cord tire 276
" specifications 1056
" truck tire 266
Flat treads 43
Flax tire fabrics 171-173
Fleuss tire valve 890
Flexible steel molds, S & B 385
Flexibility cord tires 233
" of fabrics 181-184
" tires 27-31-32
Flexifort fabric 54
Flexing breaks the fabric 231
" side-wall 627
" tire 28-30-31-32
Flint, Francis 56
Floor plans, tire plant 82-85
Fluxes 110
Foam, rubber 570
Folding endurance 204
Follen tread 966
Ford car rims and wheels 818-835-837
Ford car tires 632
" Henry 656
" turnbuckle 810
" Universal rim 810
Foreign labor and wages 1193
" tire competition 1193
Form, De Mattia building 343
" Tew cord tire 485
Forming-rolling machines, tube 744
Formulae, cement (See Cement formulae) ..145
" sponge rubber, fillers 576
" tire fillers 574
" tire compounds 111
Forsyth endless tire wrapper 680
Fort Wayne tread 963
Fossil flour 108
Foutts inner tube mandrel 760
Frankel, Max, and Runge 1160
Freese tread 955
Freight carrying, pneumatics for 49
" service, motor vehicle 1176
French tire sizes 641-644
" vulcanizer 1022
Friction calenders .....
Kearns Multiple 125
Seiberling 126
Friction compounds 111-278-1058
Frictioned fabric, aging rolls 127
Frictioning fabrics 89
" tire fabrics 122
Friestedt rim tool 921
Froehlich tread 956
Frost leather-to-rubber vulcanizer 305
" retreading vulcanizer 1109
Fulton mud hook 992
G. & J. bicycle tires.....62-649
" clincher tires 40
" cord tread 952
" motorcycle tire 655
" rim 790
" " patents 841
" thread fabric 234
" Tire Association 63-652
" " 982
" " Co. 60-62-63-64-234
" " patents 40-41-62-63-64
" " tool 916
" " valve 894
" treads 952-953
G. R. C. demountable rim 805
Gaa puncture fluid 1094
Gadsby-Walen crimp tester 213
Gage, Pneu-Meter blow-off 871
Gages, Midgley fabric caliper 127
" pressure 916-935
" recording 534
Bristol 534
Edson alarm 535
" rim 916-943
" thickness 598
Ames 598-599
Randall & Stickney 599
Superior leather 599
" tire pressure (See Pressure gages).....935
Gammeter, John R. 400
" -Johnson vulcanizing bag 345
" bead centering device 329
" bead forming apparatus 329
" core revolving machine 355
" heater press 497
" horizontal press vulcanizer 519
" inner tube machine 753
" internal pressure core 346
" fabric feeding device 403
Garage jacks 922
" pumps 862-872
Gardner air compressors 874-876-877
Gaiters of tire fabric 1175
Garthwaite tread 957
Garza puncture fluid 1095
Gas black 102
" inflation of tires 883
" tire inflators 885
Gasoline cans 88-89
" consumption, automobile 1184
" containers, safety 1102
" distribution 138
" storage 88-138
Gates Half-Sole repair tires 1063
" tire testing track 610
" tread 960-962-963
Gauss " 964
Gautier tire 934
" armored tire builder 304
Genard tread 970
General Electric calender control 129
" tires 47
" treads 951-952-960-964
German tire filler 572
" tread riveter 206
" vulcanizer door closer 521
Germany, synthetic rubber in 77
Giant tread 959
Gilbert (Continental) rims 822-825-826
" inner tube case 944

Gilbert tire locks 912
" tread 954
" type (Continental) rim....807
Giles indicator tire valve 904
Gillette and Hutchins tread 966
" tire core remover 851
" tread 962
" bead core machine 823
Githens treads 965
Gleason fusible core 689
" -Peters tire pump 858
Glines, liquid rubber 1098
Globe compound hand pump 861
" mandrel sherardizing method 761
" tread 949
Glue 109-112
" wheels 914
Goetze treads 957
Goldman reclaiming process 1162
Good Brothers thread coater 164
Goodrich airplane tires 658
" Co., B. F....57-58-59-61-62-68-236-268-624-634-826-1210
" motorcycle tire 655
" puncture plug 1026
" retread band 1084
" rims 806-818-841
" tire caliper 937
" tires 47
" treads ...949-952-954-955-959-960-961-964
Goodyear air bottle 883
" bicycle tire 654
" buckle-on patch 927
" cord airplane tire 269-270-659
" " patch 1071
" " tire 244-262
" heavy tourist tube 717
" inner tube 707
" rims 813-814-824-825-826-831-841-842
" tire building machine 68-69
" Tire & Rubber Co..68 69-255-268-627-632-638-826-842
" tires 48
" treads 949-953-958-959
" trucks 259
" -Tyler tube machine 755
Gordon-Birmingham bias cutter 281
" tread 950-957-958-962-965
" tread strip builder 296
Gormully & Jeffery Mfg. Co....40-44-62
Gorton tread band molds 878
" mold engraving machine 388
Gottwals armor applier 310
Government specifications, accessories 1055
" " bicycle tires 669
" " cord tires 274
" " motorcycle tire ...672
" " repair materials ..1057
Grain effects 110
Granite tread 951
Grappler bicycle tire 655
Gray, Christian H. 236
" endless tire wrapper 683
" mandrel and mold 344
" -Sloper cord tape forming machine....461
Greb rim tool 920
Gredys tread 965
Green gum 113
Greene tread 956
Greensburg reinforced tube 715
Greenspan tread 960-967
Greyhound cord tread 953
Gridiron tread 951
Griffith (Miller) cord tire 237
" mechanical stitcher 405
Gripwell tread 953
Griswold tire healer 1093
Grooms tread 964
Grosheintz inflation investigations 883
Grosvenor lifting tongs for tire cores....351
Grow, D. F. tread 964
Grus tire chains 991
Gryphon tread 956
Guarantees, mileage 47
" standard tire 61
Guayaquil rubber 108
Guayule 108
Guco air compressor 876-877
Gummer expansible mandrel 349
Gut inner tubes 717
Gutta percha 76
" " cements 181
H. F. Baby vulcanizer 1020
"H. F." jointless joiner 780
H. & H. tire fork 919
H. & M. thermometers 533
Haegg-Nivet tire machine 686
Hale-Christy air filling stations 875
" & McLaughlin tread 957
" relief jack 922
Hall spare wheel 837
" splicing mandrel 783
Hammel tire coater 547
Hammers, rim 915
Hampton blow-out patch 924
Hand trucks, factory 106
Handley-Page airplanes 270
" " " tires 236
Hanes tread 952
Hanley tread 964
Hanna calender for forming and joining rubber sheets 300
Hannover Gummi-Kamm inner tube 706
Hansen hose connection 881
" inflating valve 882
" pressure indicator 880
Harburg demountable rim 799
Hardman Sure Grip tread 953
Hardy press vulcanizer 697
Harley, F. L. 1175
Harris cord wrapping machine 471
" indicator tire valve 904
" puncture finder 940
" reclaiming process 1163
Hartford bicycle tire 649
" cord tread 953
" rim patents 841
" Rubber Works Co. 38-58-59-60-61-65-268
" tire tester 608
" tires 982
Hartley tread 960
Haskins flexible shaft buffer 543
Haslup automobile jack 921
Hathaway indicator tire valve 903
Haun-Chalfant sheet metal core 341
Hauvette tread mold 383
Haworth multiple inner tube 711
Haynes 41
Hazeltine tread 958
Healy detachable tire grip 977
" removable rim 836
Heat, cord tire frictional 233
" damage 998-1000
" in vulcanization 102
" tire plant 81
Heater presses (See Presses, heater) 84-90
Heath vertical brushes 225
Heating, tire 28-32-620-624
Heels of tire fabric 1175
Helbing-Reichelt-Nienaber thread coater....164
Helix inner tube 716
Hemp tire fabrics 171-173
Henderson inner tube 722
" -Mahon diagonal weft loom 287
" tread 953-966
Hendrie tread 949
Henley non-skid tire 982
Henry wired tread maker 309
Hercules tire cover 977

Hercules tread 952
Hermann tire building machine 434
Hermetic inner tube 707
Herrick tread 954
Herz air compressor 876
" anti-skid tire 982
" Tandem pump 866
Herzog bias fabric machine 290
Heskett tread 965
Hewitt " 957-959
Heyl-Dia reclaiming process 1160
Heywood nest mold 692
Hibbs expander 1127
" fabric stripper 1170
Hibner tread cementing machine 303
Hick-Myer rim tool 921
Hickory Wheel Co. 58
Highway expansion necessary 1142
" tire protector 979
Hill-Stage vulcanizer 1131
Hinman collapsible core 334
Hirsch expanding core 1127
Hirth-Merkle tube skiver 777
Hisey-Wolf buffer 1134
History, bicycle tire 646
" cord " 234
" pneumatic " 34-56
Hodgman, George F. 61
Hodgman Rubber Co. 59
Hoffman tread 961-963
Holden tire tool 917
Holders, spare tire 911
Holding, William 62-64
Hollow cord rubberizer, Tew 169
Holmes mandrel 689
Honeco temperature controller 535
Hood Rubber Co. 68-69
" treads 949-953-955-960-965-967
Hoover cord impregnator 170
" mud hook 992
Hopewell enclosed spreader 150
" spare tire case 913
Hopkinson-Midgley ring molds 374
" Q. D. demountable rim 828
" tread 955-960-962
Horizontal vulcanizers (See Vulcanizers, horizontal) 90-488-518
Horsey 1023
Horse-Shoe Re-Cord tube 724
Horton-Wagner collapsible core 341
Hose pipe tires 41-59-660-667-669
" rubber 57
Houdet demountable rim 794
Houk detachable rim 819
Howard demountable rim 802
Howe & Langley puncture fluids 1095
" tread 963
Howison, R. M. 62
Hoyt tire inspector 545
" tread centralizing device 302
Hubbard cord measurer 484
" cord tire builder 685
" expanding mandrel 689
" Jelly cutter and trimmer 294
" Prevost 1153
Huestis thread layer 681
Humidity in cotton carding 180
Humphrey inner tube 720
" tread 963
Hunter dry kiln 100
Hurricane drying machine 100
Huss, R. W. 58
Huston tread 958
Hutchinson non-skid tread 986
Hutz reclaiming process 1163
Hyatt cord fabric machine 469
Hydraulic accumulator system 536
" plant, tire factory 84
" presses (See Presses) .....
" pressure mold, Robbins 376
Hydraulic ram heater presses (See Presses, heater) 487
Hydrocarbons, mineral 110
Hydrogen tire inflation 883-884-886
Iddon stand 359
Ideal blow-out patch 921
" tread 957
Impact test, airplane tire 27
Imperial air compressor 876-877
" flat tread tire 44
" tread 949
" Valley cotton 176
" vulcanizer 1032
Imports, cotton 174-175
Import duties, foreign tire 1196
Impregnators 149
Banner 161
Carter 159
cord 164
Denman yarn 168
Destribats vacuum 157
Devine 161
Hoover cord 170
Kremer 160
Shaw 161
Smith 156
Tew cord 168
thread (See Thread coaters) 1
Thropp 163
yarn 169
Impregnating fabric 84-87
" machines 84-88
Improved Baby gas inflator 885
"Indestructible" bicycle tire 647
India Rubber, Gutta Percha & Telegraph Works Co. 62
" " sorts 72
" " & Tyre Repairing Co. 5
" " World, The 80-151-595-1161
" tread 955
Indiana " 953-955-957
Indianapolis Rubber Co. 72
Inextensible edge 50
Inflation, tire 622-1063
" cord tires 234-628-629
" gas 887
" recommendations, S. A. E. 629
" tables 628
" tire sizes and 617
" truck tires 262-265
" vehicle tires 630
Infusorial earth 109
Ingredients, compounding 102-103-108-113
" tests 568
Injuries, commonly neglected tire 1014
Inland tire pump 859
Inner Seal 1093-1098
Innersealum 1092-1096
Innershu tire 959
Inner tires and cushions 567-931
" tube bags 944
" " bevelers 774
" " care 1019
" " deflator, McClenathen 758
" " " Williams 1141
" " forming-rolling machines 744
Bowden 747
Bridge 751
Current 752
Doughty 748
Ellinwood-Miller 747
Fenton 754
Gammeter 753
Kremer 752
Nall 754
Roberts mold-vulcanizer 756
Rucker thread winder 750
Tyler-Goodyear 755
Witsaman 755
Work 745

Inner tube machinery 786
Allen valve nut tightener 785
Dunlop-Macbeth 739
Gillette valve nut tightener....785
McClenathen tube deflator 786
Royle tubing machines 737
Sarco transfer printing 735
tubing machines standard 736
" " mandrels 758
" " " inserter, Miller 763
" " mastics 1027
" " mold-vulcanizer, Roberts 756
" " patches 1018
" " poles 758
" " puncture proof 709
" " removers 763-764
" " repair 1017
blow-outs 1031
cold cure 1025
cuts 1029
patching 1029
permanent 1029
plug 1025
punctures 1029
roadside 1017
splicing 1032
valve bases, applying 1032
vulcanizers 1129
specifications, Government 1029
" " reversers 763-764
" " Savage patent 727
" " Seal 1093-1098
" " size variations 732
" " skivers 774
Allen 776
Hirth-Merkle 777
" " sleeves 925
" " splicers 781-1132
" " splicing mandrels (See Mandrels, inner tube splicing)....777
" " " vulcanizers (See Vulcanizers, inner tube splicing 777
" " specification, Government 733
" " stock compounds 1059
" " strip cutters 740
" " testing tanks 1141
" " theory 706
" " tubing machine 727
" " vulcanizers (See Vulcanizers, inner tube) 760
" " vulcanizing molds 771
" " " presses 771
" " " shells 771
" " unwrapper, Ross 768
" " wrappers 765
" tubes 706
" " butt-ended 706
" " compounds 725
" " cord tire 721
" " flattened-end 57
" " inspection 732
" " laminated 728
" " leather and gut 717
" " manufacture 725
" " Marks patent 729
" " multiple 711
" " pinched 57
" " reinforced 714
" " rolled 729
" " seamed 728
" " self-healing 718
" " " inflating 724
" " splicing 731
" " testing 732
" " truck tire 266
" " types 726
" " valving 731
" " vulcanizing 729
" " women making 732

Inside Tyre 931
Inspecting fabric 87
" machines, tire 545
" rubber 87
" tanks 90
Inspection, fabric 187-188
" Government cord tire 278
" inner tubes 782
" table 98
" tire 541-597
Instruments, fabric testing 206
Insulating beads 89
Interchanging tires 1010
Interlock inner tire 932
Interlocking cord tire 241
Internal pressure cores (See Cores, internal pressure) 344
" " molds (See Molds, internal pressure) 368
" " tread molds 384
International tire protector 935
" Wheel & Traction Co. 840
Invalid chair tires 35
Iowa tread 960
Irish linen tire fabric 171
Iron oxide, red 109-112
Ives cord construction 240
" tire valve 900
" tread 963
J & D tread 958-964
J. M. engine-driven pump 864
J. P. tire tool 917
Jacks, automobile 915-916-921
" lifting 1211
" tire 89-90-916
Jacket, Midgley vulcanizing 372
Jackson, Andrew 1148
Jameson feeder and mixer 116
Jappe elastic fabric 280
Jatco tire filler 566-578
Java rubber plantations 75
Jaxon standardized rim 806
" Perlman rim 806
Jeffery, Thomas B. 40-62-63-234
" tire patents 62
Jelco-Atlas inner case 935
Jelly-Hubbard strip cutter 294
Jewett puncture fluid 1094
Jiffy collapsible rim 808
" tire tool 917
" vulcanizer 1023
Johns-Manville demountable rim 823
Johnson-Gammeter vulcanizing bag 345
Johnston bead trimmer 1165
Johnstone " core former 318
" internal pressure mold 368
Joiner, Pfister-Addyman strip 294
Joining tables 663
Jolly spiral spring balance 605
Jon-Con tire protector 932
Jones tread 955
Journal of the Society of Automotive Engineers 257
Juleco engine-driven pump 864
Jumping tests, truck tire 592
Junk men 1156
Jury autographic fabric tester 220
K. C. No-Stretch tire boot 928
" " safety lock tube patch 926
" " Vulc-tite blow-out patch 924
K. P. Universal rim tool 921
Kahn tire release valve 905
Kant Slip reliner 930
" " tread 949
Kappeler tire protector 977
Kauzee treads 959
Kearns multiple friction calender 125
" tread calender 299
Keaton, Robert 66
" Tire & Rubber Co. 66

Keaton treads 955-956
" " suit 66
Keegan-Dunlop stud applier 310
Kellogg air compressor.....876-877
" engine-driven pump 864
Kelly-Springfield treads 952-961-967
Kelsey rear truck wheels 838
" rims 807-830-831-842
" steel-felloe wheels 807-837
Kempshall burst tire protector 926
Kennedy tread 967
Kenyon " 962-966
Kettle vulcanizers 1104
Keystone adjustable blow-out patch.....926
" tires 47
" treads 952-953
Kimball tire armor.....929
" tire case 986
Kintz, Q. D. demountable rim.....823
Kismet tread 949
Kline cord tire 241
" tire cording machine.....475
" tread 964
Killian tire core cleaner.....853
Kingsbacker, Alvin 181
Kirch treads 967
Knight tire builder 434
" tread 951
Knives, tire builders' 89-90
Knotted threads in fabrics.....187
Knox tread 961-965
Kocontes tread 955
Koener reclaiming process.....1161
Kokomo bicycle tire 654
" cord bicycle tire 654-665
" motorcycle tire 656
" rim and fastener.....791
" thick tread tube 714
Kor-Ker puncture fluid 1092-1098
Kraft valve insides 909
Kreitlein tread 958
Kremer bead wrapping machine 324
" inner tube machine 752
" " " splicer 782
" tire builders 430-431-433
" tire fabric impregnator 160
Kress-Converse tire builder 425
Kuentzel bead former 324
" paper wrapper 556
" tire " 455
Kuhlke collapsible core 338
" " " lock 341
Kum-a-Long 993
Kush puncture proof tube.....709
Kushion-Kore 566-578
L & L Handy rim tool.....920
L & M tire tool.....917
Labor, foreign conditions.....1193
Laboratory organization, tire factory.....595-606
Lacre spare tire bracket.....912
Lake fabric band machine.....192
Lamb tire patents 51
Lambert tread 965-967
Lampblack 110
Lancaster tread 956
" wire grip tire 983
Landing wheels, airplane.....846
" " specifications, airplane 270
" " test, airplane 274
Landon tread 956
Langer fabric loom 199
Langston paper slitter and rewinder.....552
Laroche tire building patent.....399
Lasts, tire 1103
Lathes, stripping and wrapping.....84
Latour-Capelle thread coater 167
Lauritzen heater press 507
Lavender tire patent 55
Lawco rim tool 921
Lawlor tread 963-965-966
Lead 112
Leader air compressor 876
League of American Wheelmen 648
Leaks, locating tire 1017
Leather inner tubes 717
" non-skid treads 646
" steel-studded treads 45
" -to-rubber vulcanizer 398
" tread molds 385
" " reclaiming 1163
" " studded 972
Lectroflater air compressor 876-877
Lee puncture proof tire.....935-997
" tube splicing mandrel 779
" Zig-Zag tread 949
Leggings of tire fabric 1175
Legislation, proposed tire 70
L'Empereur tread 969
L'Heretier puncture fluid 1094
LeMarquis tread 975
Leno fabric weaves 184
LePerson tire 621-982
Levers, tire 915
Lewis tread 957
Liberty tread 962
Lifting jack 1211
Light damage 998-1000
" tire plant 81-83
Lightning fluid 1092
Lime 110-111-112
Lincoln Highway 247-1152
Linen tire fabric 171
Liner cleaners 89
" mold, Sloper 530
" wind-up 28
Lining, Government cord tires 276
Linseed oil 110
Lipman air compressor 876-877
Liquid Rubber 1092-1098
" Tire Tonic 1095
Lister cord fabric.....245
Lister tire builder 429
Litchfield, P. W. 632
Litharge 110-111-112
Lithopone 108
Litigation American decisions 56
" British " 49
" Canadian " 55
" French " 54
" rim patent 838-839-840
" tire patent 38-43-49-66
Little Giant air compressor.....876-877
Load capacity tables 621-623-631
" stretch relations, fabric.....203
" tire 31-32-619-623-631
Loadometer 943
Loads, depreciation of 259
" pneumatic truck tire 262-263
Location tire plant 81
Locks, spare tire 911
Lock-Switch pressure indicator 878
" " tire pressure gage 905
Locktite patcher 1028
Locomobile Co. of America.....833
London rubber market 74
Long & Mann detachable rim.....817
Long-staple cotton 171-174-175-176
Long-Wear tread 955
Loom and tire builder, Schaffer 438
" Bourdin weftless fabric.....478
Looms, bias fabric (See Bias fabric looms) ..287
" fabric 189
Crompton & Knowles, automatic....189
DeLaski circular 193
DeLeeuw circular braider.....196
Dickinson tubular fabric 197
Doughty fabric strip 192
Dunkerley-Arnold braider 198
Fisher fabric braider 198
Lake fabric band 192

Looms, fabric (continued)
Langer 199
Parks & Woolson trade marker 191
Subers band coverer 197
" casing machine 196
" fabric strip 197
Lord, E. C. E. 1153
Los Angeles Water Department 1183
Lousteauneau demountable rim 794
Low 1023
Lowinson thread micrometer 221
" yarn-cloth quadrant 220
Lubin, Isador 1205
Lug wrenches 915
Lyall, W. L. 180
Lyman puncture fluid 1093
" tread 961
Lyon tread 953
M. L. demountable rim 794
M & M tread 950
MacIntosh tire casing machine 411
McClymonds, L. K. 59
McCreary tread 952
McCue detachable rim 819
McCune, Jeseph 56
McDevitt and Greenspan tread 957
McElrath tread 966
McEwen vacuum vulcanizer 1108
McGraw tread 951-958-959
McLean treads 951-962-964-966
McLeod cord laying apparatus 478
" -Dees internal pressure mold 370
" heater press 503
" horizontal vulcanizer 520
" internal pressure mold 369-503
" vulcanizing bag 348
McMahon tensioning device 404
McNaull tread 951
McNeill bead dryer 226
McNutt bench cans 140
" cement containers 140
Macbeth-Dunlop mold and press 377
" " " opener 393
" " tube machine 739
" " " mold 772
Machine methods, tire building 396
" vs hand building 398
Machines, annular cord tire 198
" inner tube 736
" strip and band (See Strip and band machines) 192-197
" tubular fabric 193
Macintosh & Co. Ltd., Charles 35-62
" cushion bicycle tire 648
" tire patents 35
" " protector 932
" " valve 888
Madison treads 962-967
Magic Rubber Mend 1027
Magnesium carbonate 109
Magowan multiple inner tube 712
Maintenance, proper tire 1005
Major blow-out patch 923
Making up 78
Malkonite tread 952
Maltese Cross tread 949
Managers, factory and technical 606
Mandrel inserter, Miller tube 763
" mold, Gray expansible 344
" removers, inner tube 763
Mandrels 79
" aluminum tube 758
" British steam 1125
" Dykes 1126
" expansible sectional 1126
" Gummer expansible 349
" inner tube (See Inner tube, mandrels) 758
" " " splicing 90-777-1032
Angelican-Robinson 780
Chamberlain 778
Mandrels, inner tube, splicing (continued)
Hall 783
Lee 779
Lowe 783
Miniszewski-Printz 777
Manicoba rubber 96-108
Mansfield tread 950
Manufacture
" bicycle tires 660
" blow-out patches 586
" flaps 582
" inner tubes 725
" motorcycle tires 670-671
" preliminaries in rubber 78
" " " tire 91
Manzel engine-driven pump 868
Maplebay tire cover 977
Marathon tread 950
March trussed inner tube 721
Marks patent inner tubes 729
Marquette cord covering machine 481
" tire tool 917
Marsh rims 797-812-825
Marshall flap vulcanizer 580
Martin tread 963
Marvel vulcanizer 1023
" spark plug pump 869
Mascot air compressor 874
Mason tread 951-957
Master air compressors 876-877
" tread 967
Mastics, inner tube 1027
Material for flaps 586
Materials, routing through factory 91
Mather collapsible core 339
Mathern fabric laying machine 416
" improved tire machine 436
" tire builder 69
" tire smoother 401
Mattson tread 950
Maxfield engine-driven pump 866
Maxotire 935
Maxwell bead trimmer 1167
May puncture proof tire 996
Mayo air compressor 877
Maysville road 1148
Measuring device, Hubbard cord 484
Measurements, Government cord tires 276
Mecca 400 tread 952
Mechanics' Magazine 34
Mechanical fabric inner tube 706
" fastenings 700
" Rubber Co. 59
Meir bead trimmer 326
Méliorat, L 1175
Mending fabric 187
Meredith-Bayne cord tire winder 470
Merkle-Hirth tube skiver 777
Mesinger repair band 928
Metallic Rubber Tire Co. 65
Metric tire sizes 641-644-1197
Mexican cotton 175
Meyer tire release valve 904
" tread 953
Meyers mold conveying system 391
Michelin air bottle 883
" clincher tires 40
" demountable rim 794-795-796
" et Cie 43-53-54-622-644-645
" inner tube 708
" non-skid tire 984
" Tire Co. 650-651
" " fork 919
" " inflator 868
" " tests 591-613
" " tool 916
" treads 953-959-979
Micrometer, Lowinson thread 221
Midgley bead cleaner 327
" " trimmer 326
" " wrapper 324

Midgley cloth wrapper 452
" collapsible core 342
" demountable clincher rim 804
" fabric caliper gages 127
" flap trimmer 580
" -Hopkinson ring molds 374
" Mfg. Co. 60
" non-skid tire 66
" paper wrapper 558
" Tire & Rubber Co. 66
" tread suit 65
" vulcanizing jacket 372
" "wire grip" tread 982-994
Mileage adjustments, tire 47
" average tire 47-630
" guarantees, tire 47
Mill lines 83-91
" pan 113
" rolls 102
" room 83
Miller automatic tire machine 421
" bias fabric cutter 1103
" building stand 364
" C. E. self-healing tube 719
" cloth wrapper 448
" cord tire 287
" -Ellinwood tube machine 750
" inner tire core 569
" kettle vulcanizer 1105
" mandrel inserter 703
" paper wrapper 555
" rag wrapper 1183
" Rubber Co. 228
" sectional vulcanizer 1121
" tread 949-958-959-967
Milliken tread 961
Millimeter sizes, British 612-643
" tire sizes 629-644
Milling rubber 87
Mills 89
" mixing 83-87
" sheeting 98
" warming 83-87
Mineral rubber 114
Miniszewski-Printz splicing mandrel 777
Miraculum 565-1098
Mitchell puncture-proof tire 995
Mixed filling 187
Mixers 89
Banbury automatic 114
Banbury No. 9 114
Eimco 115
enclosed 114
Jameson 116
Triplex cement 135
Mixing mills 78-88-87-113
" room 104-106
" rubber compounds 78-87-89-113-114
Mock leno fabric weaves 183
Mohawk inner tube 717
" Keaton tread 952
" tread 951
Moisture, definition of fabric 202
" increases tensile strength 205
" permeates the carcass 232
" tire fabric 128
Mold base rings 84
" cleaning machine, Wheeler 390
" " power brushes 409
" closing presses (See Presses, mold closing) 514
" conveying system, Meyers 391
" engraving machine, Gorton 388
" equipment, miscellaneous 385
" Gray expansible 344
" opener, Dunlop-Macbeth 393
" Sloper liner 580
" stands 90
" strip numberer, Wetter 391
" vulcanizer, Dykes reliner 581
Mold vulcanizer, Roberts tube 756
Molded tires 537
Molding air nipples 666
" bicycle tires 664
" machine, Springer reliner 581
" presses (See Presses, tire molding) 509-515
Molds 79-84-90
" adjustable, in rebuilding 1052
" air nipple 666
" bead 84
" bead, Seiberling-State 315
" care of 1052
" cavity retread (See retread molds, cavity) 1114
" cycle tire vulcanizing 690
Bert 691
Cowen 691
Fawkes 691
Moomy 690
Sherbondy 690
" Dees internal pressure 501
" flap 90
" inner tube vulcanizing 771
Bert 772
Dunlop-Macbeth 772
Wick 773
" internal pressure 368
Batcheller 371
Dees 371-501
Dees-McLeod 370
Johnstone 368
McLeod 369-503
Swinehart 371
" leather tread 355
" nest 698
Heywood 698
Rath 698
Thompson 694
Waddington 692
Williams 698
" non-skid tread 382-1045
Finlayson 382
Hauvette 382
Ramsbottom-Turner tread formers 382
Sloper 383
" open tire 67
" retread 1081-1110
" studded tread 384
" Thropp 67
" tire 368
Byrne 374
Hopkinson-Midgley ring 374
Midgley vulcanizing jacket 372
Pfeiffer self-contained 372
Price electric 376
Robbins hydraulic pressure 376
" open-cure 374
Satterthwaite fabric pad 375
Swinehart 377
Tew mold shield 376
Williams open-cure 373
" tread 377
Adamson 581
Gorton endless tread band 378
Macbeth-Dunlop mold and press 377
Nall non-skid band mold and press 378
Olier 380
Thropp 379
" twin retread 1113
Molkenbur tire sustaining pump 872
Moody and Midgley tread 961
Moomy mold 690
Moore puncture fluid 1094
Morgan tube turning device 764
" & Wright 41-57-58-60-707
" " " bicycle tire 649
" " " core 686
" " " motorcycle tire 655
" " " quick repair tube 711

Morgan & Wright tire patents 58
" " " tires 982
Morrill tire jack 916
Moseley, David 54
" & Sons, Ltd., David 51-52-54
" inner tube former 772
" turnbuckle 800
Motor generators, electric 83
" tire valves 887
" tires, British standards 643
" Transport Corps 274-638-669-672
" truck development 247
" vehicle production 1181
" " registration 1178-1186
Motorcycle anti-skid tires 945
" rim sections 849
" tire makes 655
" " pressures 845
" " sizes 657
" " specifications, Government clincher 672
" " standardization, S. A. E. 657
" " valves (See Valves, motorcycle tire) ....
" tires, British standards 643
" " capacities 845
" " Continental 655
" " double tube 656
" " G. & J. 655
" " Goodrich 655
" " Kokomo 656
" wire wheels 819
Mott patent pressure 1127
Mounting tires 266-1002
Mud hooks 991
" splash guards 940
Mullikin overshoe tire 970
Multiple calendering 125
" inner tubes 711
" platen press, Seiberling 513
" repair vulcanizer 1131
Munger rim patent 838-840-841
Murray automobile jack 922
Muslin curing jackets 1083
Musselman cord fabric 245
Mutual tread 959
Nadall demountable rim 800
Nail butt-end tube press 773
" inner tube machine 754
" Shepherd puncture fluid 1096
" take-off reel 286
" tensioning device 404
" tread mold press 378
" " splicer 1177
" Tyler bead maker 319
" " calender tension device 127
" " strip cutter-skiver 741
Naphtha storage 139
Nassau tread 949
National air compressor 876
" Association of Waste Material Dealers 1164
" Automobile Chamber of Commerce, 636-637-638-1177
" Board of Trade of Cycle Manufacturers 61
" detachable rim 817
" pneumatic jack 922
" spark plug pump 869
" steam vulcanizer 1020
" tire filler 567-578
" " saver 936
" tread 952-953
" Wheel Co. 840
Naylor collapsible core 341
Neal, Arthur 51
" bias fabric reel 286
Nest molds (See Molds, nest) 692
Neutralizer, Chapman electric 54
Never-Leak 1094-1098
New Brunswick Rubber Co. 59
" Castle tread 967
" Haven sherardizing furnace 761
" Lamb Tyre Co. 51
" York Belting & Packing Co. 648
" " Park Board 989
Newmastic 564-578
Newsom tire valve 896
Newton inner tube 708
Nienaber-Reichelt-Helbing thread coater 184
Nipple, air 663-664-666
Nivet-Haegg tire machine 686
No-air 565
Nobby tread 45
Nodelay 1098
Noe indicator tire valve 903
Nokut puncture plug 1027
Non-constrictive fabric weaves 178
" skid design molds 1045
" " designs on repairs 1045
" " rubber tires 947
" " tires 44-45-46
" " tread molds (See Molds, non skid) 382
" " treads 32-45-46-65-945
" " " design 84
" " " leather 646
North British Rubber Co., Ltd. 39-40-52-53-789
Northern air compressor 876
Norwalk tread 955-958
Novak treads 964
Nowick tread 962
Nugent patch buffer 1030
Numbering machine for mold strips—Wetter 391
Nurinkle pressure gage 879
" vulcanizer 1020
Nu-rubber 1098
Nut tighteners 87
Nuttall-Bridge cloth wrapping machine 452
" " heater press 504
O. B. rim tool 920
Oberheu tread 960
Odell tread 956
Off-square of fabric 188
Ohio air compressor 874
Oil, aniline 110-111
" damage 998-999
" linseed 110
" road binders 1150
Oldfield treads 953-958-960 965
Olier cloth wrapper 449
" inner tube beveler 774
" tire tread calenders 298
" tread mold 380
" wrapping-unwrapping machine 449
Oliver tread 955
O'Neill reclaiming process 1162
One-piece tire tool 917
Open cure molds 373
Operating costs, truck tire 256
Operation economies, truck tire 258
Optima tread 973
Orelo Puncture Proof 1098
Osborn wire wheel brush 406
Osnaburgs 181-183-186
Output, pneumatic tires, 1917 175
Oven, dry weight 204
Overhead carriers, Duncan 390
" expenses 1194
" trolleys 90
Overholt air compressor 877
Overland tread 963
Overloading tires 632
Oversize tire rims 634
" tires 627-630-633-636-637
Overspeeding, tire effect 630
Owen treads 955-956-962-963-966
P. T. C. engine-driven pump 868
Pacific repair mold 1117
Packing fabric 187
" Government cord tires 278

Pads for cores 849
Paeco vulcanizer 1022
Paget detachable rim 811
Painting machines, tire .....
Hammel 547
Sprayco 547
Zimmerman 546
" tires 90-998
Paints, tire 1001-1036
Palmer, John F. 234
" John Fullerton 43-54-58
" airplane tire 236
" all-warp fabric 43-54
" bicycle tire 235-236-268-652
" cord aero tires 270-271
" " inner tube 716
" " laying machine 464
" " tire 235-268-270-459
" Cord Tyre Co. 235-236
" detachable rim 811
" flat tread tire 44
" Ideal tire 235
" mechanical fastening 792
" Pneumatic Tire Co. 236
" resiliometer 612
" thread airplane tires 658
" " fabric 234
" " tires 43
" tire fabric 58
" " patents 43-54
" " tester 609
" " valve 894
" tread 962
" Tyre Co. 612
" " Ltd. 53
" web tire for electrics 236
Panama punctureless cushions 565-578
Paper cutters and winders 551
" wrappers 559
" wrapping machines (See Wrapping machines, paper) 551
Para rubber, grades 73-74-75-108-111-112
" " washing 97
" tread 956
Paramount tread 953
Parco inner tire 573
Paridon tire builder 430
Park & Hegnett puncture filler 1098
Parker rims 809-817
" treads 953-963
" vehicle wheel 836
" Wright perforator 703
Parks puncture fluid 1093
" & Woolson cloth measurer 226
" " " fabric inspector 222
" " " " trade marker 191
Parsons detachable rim 803
Pashek tread 959
Passenger car tire and rim standards, 843-849-851-853
" service, motor vehicle 1176
Patch buffers, inner tube 1030
" specifications, Government 1070
" stocks, sheet 1028
" vulcanizer, inside 1050-1124
Patches, blow-out 579-922-1037
" cementless 1028-1056
" cord tire repair 1071
" fabric cord, specifications 1056
" inner tube 1018
" self-vulcanizing 1028
Patching inner tubes 1029
Patent litigation 38-43-49-56
" " rim 838
" office, tire inventions in 69
Patentees, few wealthy 69
Patents expire, basic tire 66
" rim 838
" single tube tire 58
Patented methods tire building 899
Patten tread 965
Patterson vertical cement churn 135
Pauli-Benniger studded tire 879
Paulitschy's sponge rubber patent 577
Pavements, asphalt and rubber 1151
Pearce and Swan tread 959
" tread 957-960-961
Pearson, Henry C. 801
" M. A. 80
Peeler cotton 171
" " for small cord tires 229
Peelings, tire 1174
Peerless engine-driven pump 864
" rubber cutter 96
" section cutter 549
Pennsylvania Rubber Co. 57-63-64-268
" anti-skid tire 979
" bicycle tire 654
" removable rim 799
" treads 949-953
Perfection non-skid climber 990
" rim tool 926
" tread 957
Perforator, Wright-Parker 703
Perkins, George T. 61
" & McMahon rim patent 841
Perlman-Jaxon rim 806
" Louis H. 838-839-841
" demountable rim 826
" Rim Corporation 838-839-840-841
" rim patent 839
Permanit 1095-1096
Perpetual air bag 1128
Peteler foot pump 864
Pfeiffer vulcanizing mold 377
Pfister-Addyman strip cutter-joiner 294
" " " " 741
Pfleumer, Fritz 572
Pflumatic 573
Pharis tread 960
Phillips and Stamm tread 955-959
P. I. W. building stands 362
" finishing stand 366
Pickett all-rubber valve 891
Pierce paper wrapping machines 553
Pigeon puncture proof tire 990
Pigment fillers 108-109
Pigments 114
" sifting 88
Pima cotton 175
Pincers, tube plug 915
Pinchbars, tire 915
Pioneer impulse pump 870
Pirelli, Dr. Alberto 591
" tire tests 591
Pirot-Zimmerman non-skid tire 989
Plan, model calender room 119
Planet sub-tire 932
Plantation rubber, grades 73-75-108-110-112
" " washing 87-97
Plant layout, tire 59
Plasters, tire 1036-1037
Pliancy, tire 29-30-31-32-133
Plouf tread 963
Plug repairs for inner tubes 1025
Plumbago 78
Ply separation 221
" yarn 187
Pneumastic 567
Pneumatic chuck, American 441
" cushion tube 728
" Tyre Co. 50
Pneu-Meter blow-off gage 871
" " pressure gage 879
Pole method, bicycle tire making 661
Poles, bicycle tire 661-665
" inner tube 758
Police wagon tires 45
Polo, flat tire alarm 905
Polson inner tire 934

Pook patent inner tube 718
Poole patent inner tube 717
Pop Off pressure gage 879
Porcupine blow-out patch 925
Pope, Albert A. 42-59-60
" George 59
" Manufacturing Co. 58-59
Porousness, bicycle tire 652
Portage treads 953-961-963-965
Porter, Fred Howard 56-59
Porzel reclaiming process 1163
Positive rim tool 921
" steam vulcanizer 1020
Pot heaters in rebuilding 1082
Power brushes in tire manufacture.....406
" " speeds for 409
" for cement churns 135
" efficiency in tires 30-31-32
" tire plant 81
Powers temperature regulators 535
Pratt cable bead 315
" tread 955
Premier electric vulcanizer 1025
" tread 961
Preservatives, rubber 1036
Press, Fisk cold 67
" hydraulic filler 562
" Roovers' embossing 392
" Thropp tire 67
" vulcanizers (See Presses, vulcanizing).509
" " cycle tire (See Vulcanizers, cycle tire press).....694
Presses, bead 89
Southwark 325
" heater 84-90
Adamson 501
Akron 509
" -Williams 495
" " improved 497
Allen 494
" quick-opening 495
Beer 499
Decauville 492
Dees 501
Farrell 493
Gammeter single ram 497
Lauritzen 507
McLeod 503
Nuttall-Bridge ramless 504
Shaw 488
" double ram 490
Southwark 506
Thropp 505
Welton 502
" inner tube vulcanizing 771
" Nall, multiple butt-end 778
" mold closing .....
Southwark 515
Wood 514
" rimming .....
Southwark 517
W-S-M hydraulic 516
" tire molding .....
Coffey 516
Taylor 515
" tread mold .....
Macbeth-Dunlop 377
Nall 378
" vulcanizers and 487
" vulcanizing 509
Doughty 511
Gammeter horizontal 519
Seiberling multiple platen 513
Vincent 509
Wolber 510
Pressure gage, Schrader 881
" " Romort tire tester 881
" gages 916-936
" " pump connection 879
" hints 1070
Pressure indicators 878
" regulators 878
Pressures, motorcycle tire 845
Prest-O-Lite 942
" " " gas tanks 882
Prest-O-Seal 1093-1098
Presto demountable rim 808
Price electric tire mold 376
Price-Fisher tire builder 433
" Raymond B. 400-899
Prices, tire 1205
Printz-Miniszewski splicing mandrel 777
Production, motor vehicles 1181
" superintendent 606
" tire and tube 1176-1179
Proehl tread 962
Profiling calender, Bridge 701
Protection, rubber tire 968
Protectors of tire fabric 1175
" steel tire 985
" tire 931
Provodnik Columb tread 983
Prudden demountable rim 842
Public service vehicle tires 45
Pulled tire fabric 1174
Pulley tire tester 607
Pulling fabric strips 1169
Pullman tread 949
" " band 971
Pulverman tirometer valve 904
Pump connections, airplane tire 894-898
" " European valves 897-899
Pumps 916
" bicycle 858
" compound hand 861
" connections 880
" double-acting 861-862
" emergency 858
" engine-driven 862
" foot-operated 860
" garage hand 862
" " and repair shop 862-873
" hub-operated 873
" impulse 869-870-871
" power 1102
" single-acting 858
" spark plug 868
" tire plant 84
" " sustaining 871
" vacuum 90
Puncture closing treads 1088
" cord tire resistance 283
" filler 1098
" finders 939
" fluids 1087
" plugs 1026
" plugger 1093-1098
" proof bicycle tires 652
" " inner tubes 709
" " Pneumatic Tyre Co., Ltd.....58
" " tires 993
" repair, inner tube 1029
" Seal 1098
" Stop 1093-1098
Purchasing department 606
Pure gum fallacy 102
Pussy Foot non-skid tire 984
Pve cord fabric machine 479
" " " patent 245
" Musselman cord bicycle tire 665
Pyrolin 1093-1098
Q. D. demountable rims (See Rims, Q. D. demountable) 820-821
Quadrant, Lowinson yarn-cloth 220
Quaker City tread 949
Quality steadily rising, tire 72
" tread 961
Quick detachable bead 313
" " " construction 185

Quick Detachable rims (See Rims, Quick detachable) 809
" -Ezy rim tool 920
" -operating vulcanizer doors 521
" repair bicycle tires 649
Quin cement churn 334
Quinn strip cutter 740
R & D bead cutter 1167
" " fabric puller 1169
Raber wrapper and unwrapper 445
Race, first automobile 72
Racine cord tread 953
" tires 47
" treads 949-952-954-960
Racing motorcycle tires 657
" tests 593
" tire treads 948
" tires 44
Racks, Carll tire 550
" portable tube 90
" stock 89-90
" table 89
" tire and tube storage 90
Rag roller, Akron-Williams 767
" " Allen 768
" rollers 90-767
" rolling 90
" wrappers 1133
Railway vs tire service 1176
" track rim flanges 832
Rambler bicycle tires 40
" bicycles 649-790
Ramie tire fabrics 172
Ramless heater press 504
Ramsbottom-Turner tread formers 382
Randall & Stickney thickness gage 599
Raw materials and exchange 1193
" scrap 117
Rawdon patent inner tube 724
Raymond triple inner tube 713
Reading Rubber Co. 56
" " Tire Co. 59
Rebuilding 1072-1075
" an essential business 1072
" materials, sources 1072
" methods 1074
" selecting tires for 1073
" stands, Akron-Williams 366
" stripped fabric for 1174
Receiving department 91
" room 88
Reclaimed rubber 110-112-113-114
consumption 1158
solution 1160
uses 1158-1160
Reclaiming fabric 1157-1164
" processes 1158
Alkali 1158
Basle 1160
Becker 1163
Compagnie Générale Caoutchoucs de Terebenthine 1162
Cox 1162
Debauge 1161
DeVillers 1162
Goldman 1162
Harris 1163
Heyl-Dia 1160
Hutz 1163
Koener 1161
leather treads 1163
mechanical 1158
O'Neill 1162
Porzel 1163
Runge 1160
solution 1158-1159-1160
Zühl 1160
" rubber 1157
Recording gages (See Gages) 534
" thermometer, Brown 533
Recovering rebuilt tires 1077
Rector tread 965
Red Cross vulcanizer 1021
Reel, Nall take-off 286
Reele tread 960
Reeling machine, Neal bias fabric 256
Reeves, Alfred 1177
Rehmentlan puncture fluid 1095
Reichelt-Helbing-Nienaber thread coater 764
Reid tread 963
Reinforced inner tubes 714
Reinforcing agents 110
Reliance air container 722
Reliner mold and vulcanizer, Dykes 561
" mold machine, Springer 581
" skiver, Western 582
Reliners 579-586-930
" construction of 586
" specifications 1056
Relining 1049-1076
Removable rim 838
Removing levers 915
" tires 1017
Repair bags, steam 1125
Repair bicycle tire 650-1087
casing cuts 1087
cuts 1086
double-tube repairs 1087
plug repairs 1087
punctures 1087
puncture fillers, rubber 1087
" " fluids 1087
self-healing devices 1087
" " tires 1087
single-tube repairs 1087
tire valves 894
" blue flame 1064
" business, tire 1035
" cable cord tire 1067
" cord tire 1066
" devices, quick 1015
" fabric tire 1035
blow-out, large 1046
" " patches 1037
" " small 1042
fabric mending 1039
" repairs, inside 1040
hints 1051
non-skid designs 1045
paints, tire 1036
plasters, tire 1037
plastics, for cuts 1038
preservatives, rubber 1038
preventive measures 1038
relining 1049
rim cuts 1048
road repairs 1037
sand boils 1035
sectional repairs 1041
specifications, government 1055
stepped-out fabric repairs .. 1039-1042
stone bruises 1040
tips 1051
tread repairs 1038
vulcanizing 1050
" importance of prompt 1000
" inner tube 1017
" kits 916-1037
" " , specifications 1057
" materials, specifications 1057
" plugs 1087
" roadside 1017-1037
" schools, tire 1035
" shop 1009
" " pumps 862-873
" specifications, Government inner tube 1029
" stock compounds 1056
" tools 1101
Repairable tires 1174
Republic circular tube mandrel 750
" detachable rim 816
" detachable tire 816

Republic inner tube mandrel 759
" treads 950-967
Research department, laboratory 600-605
Resilience, cord tires 238
" fabric tires 230
Resiliency, tire 27-29-30-31-32-33-44
Resiliometer, British 612
" Duryea 611
" Palmer 612
" Widney 603
Resin in rubber 108-111
Retread band compounds 1059
" bands, applying 1063
" " endless 1083
" molds 1110
" " cavity 1114
Akron Type E 1118
Pacific 1117
Soper 1117
Wilkinson 1119
Zwebell 1116
" " in rebuilding 1081
" " twin 1113
Retreader, Ewald 1140
" Western 1112
Retreaders, dry cure 1081
Retreading 1061-1078
curing 1081
methods 1078
tread applying 1078
" building 1078
" coil 1082-1083-1108
" kettle, Akron-Williams 1105
" materials, standard 1061
" methods 1062
" rims 1108
" technique 1062
" tires for 1062
" vulcanizers 1064
" " horizontal 1106
Revere Rubber Co. 59
" treads 952-960
Rewinder and slitter, Cameron 583
" slitter, Cameron 742
Rewinding machine, Sloper 460
Reynolds, F. I. 625
" tread 955
Rhodes tire remover 918
Ribbed treads 43
Richardson, D. B. 1196
" tread 955
Riker, A. L. 833
Rim bolt and nut 853
" contours 843-851-852
" contractors 919
" cuts, strengthening 1048
" design and patents, early 787
" development 46
" dimensions, airplane wheel 847
" filler, rubber clincher 812
" flange, detachable 809
" flanges, quick detachable 46
" gages 916-943
" patents 838
" patent litigation 838
" sections 843-851-852
" " motorcycle 849
" sizes 843-850-852
" " British standards 643
" " S. A. E. 636-637-638
" truck tire 267
" standards, British 853
" standardization 825-841
" " British 853
" tools 916
" valve hole sizes 844-848
Rimlox tire carrier 911
Rims, airplane landing wheel 846
" applying truck tires to.....833
" clincher 46-789
" " Bartlett 39
Rims deflection test automobile 845-849
" demountable 46-838
" " clincher 792-793
" " " split 792-793-803
" " straight side 792-806
" " truck tire 830
" detachable 792-838
" Dunlop-Welch 269
" locking devices 793
" mechanical fastening 790
" motorcycle, S. A. E., standardization....658
" oversize tire 634
" quick detachable 795-809
" " " demountable ...820-821
" removable 838
" set test automobile 845-849
" special 837
" split curing 1082
" " demountable 46
" standard bicycle 61
" straight-side flanges 792
" turnbuckle fastening 655
" truck tire 267
" and fastenings 787
Bartlett 789-790
cycle tire 787
design, trend of 792
Dunlop-Welch 788-791-806
early designs and patents 787
wired-on tire 788-790
Ring molds, Hopkinson-Midgley 374
Rings 90
" bead placing 84
" for cores 349
" mold base 84
" Rowley cloth wrapping 349
Rivet applier, Stimson 311
Riveting machine, leather tread 1102
Road surfaces for pneumatic tires 29-30
" tests 590
" " Government cord tires 276
" -worn tires 1174
Roads for tires
American building program 1152
asphalt 1150
automobile wheel wear 1149
books and studies 1153
builders' rights and duties 1145
crowned 1148
deterioration from use 1144
depreciation 259
expansion necessary 1142
English 1144
French 1144
guttered 1148
impact truck tests 1153
importance underestimated 1142
improved 1147
laws 1144
Lincoln Highway 1152
Marysville 1148
mileage 1143
oiled 1148-1150
oil builders 1150
rubber 1151
safeguarding 1144
separate for automobile 1149
sheet asphalt 1151
speed restrictions 1144
tar 1150
user's rights and duties 1145
weight restrictions 1144
" tires equivalent of good 72
Robbins hydraulic pressure mold 376
" open cure mold 374
" tread 955
Roberts tube mold-vulcanizer 756
Robertson tire inspector 545
Robinson-Angelican splicing mandrel 780
Rollers 89-90
" hand 1102

Rollers, tread 1135
Rolling devices, fabric 401
" -forming machines, tube 744
Rolls, C & M fabric smoothing 225
" fabric aging, Cederstrom 127
" mill 102
" mixing mill 113
Romort inflating valve 881
" tire tester 881
Roovers embossing press 392
Ropson unpuncturable tire 568
Ross inner tube unwrapper 768
Rossman hand rag wrapper 1134
Rotary converter, electric 83
" treads 963
Rotex sifter 106
Roth nest mold 692
Roughing tire carcasses 408
Rousillon wire winder 309
Routing materials through factory 91
" rubber 87
Rowley cloth wrapping rings 349
" tire builder 414
Royce patent (Crescent rim) 799
Royle tubing machine 737
Rubber (See India Rubber) ....
" Ace tire filler 573
" African 96-97
" artificial 76
" Association of America 637-638
" baled 95
" breaking down 87-102
" cements 131
" cloth tester, Scott 214
" compound to replace fabric 188
" compounding 87-102
" cutters 95
" cutting tables 87
" drying 87-98
" enemies 998
" fabric-cord tester, Scott 218
" foam 570
" Goods Mfg. Co. 59-60-62
" groups 108
"Rubber Machinery" 601
" Manicoba 96
" manufacture, preliminaries 78
" mineral 114
" pavements 1152
" Products treads 959-965
" reclaimed 114-1157
" reclaiming 1157
" routing 87
" sheeting 87
" sheets 95
" slitting 87
" " machines 87
" solutions 132
" storage 88-87-95
" substitutes 114
" synthetic 76
" tests 605
" " , crude 596
" testing machines (See Testing machines, rubber) 601
" Tire Association 61
" trade divisions 79
" washers 95
" washing 87-95
" weighing 87
" " scales 87
Rubberette 1098-1099
Rubberine 563-1092
Rubberized fabric, caliper gages 127
Rubberstone 1098
Rucker thread winder 750
Rudge-Whitworth wheels 819
Ruff air filling stations 875
" tire grips 991
Rung hub operated pump 873
Runge reclaiming process 1160
Runge-Werke, Aktiengesellschaft 1160
Running board tire holders 912
" tire caliper 937
Russell spare tire case 914
Rust damage 998-999
Rynehart A-1 rim tool 920
S. A. E. airplane tire specifications 693
" Bulletin 180-187
" recommendations 842
" rim sizes 636-637-638
" specifications, airplane tires 271
" " " tubes 273
" standardization, motorcycle tire 657
" tests, airplane tubes 273
" tire standards 635-636-637-638-639
S. & B. flexible steel molds 385
Saddle-bags of tire fabric 1175
Safepack Krepekraft paper wrapper 559
Safety tire lock 911
" " signal 939
Sakellaridis cotton 182
Salama tire protector 985
Salus tire release valve 904
Salvaged fabric grades 1173
" tire rubber grades 1164-1173
Salvaging road-worn tires 1164
Sampson puncture plug 1026
Sand blast tests, rubber 605
" boils, mending 1038
Sanford engine-driven pump 863
Satterthwaite fabric pad molds 375
Savage patent inner tubes 727
" treads 950-962
Scales 88-89-90
Chatillon tube 548
Toledo tire 549
weighing 87-104
Schaffer tire building machine and loom 438
Scheel, H. V. R. 187
Schell tread 963
Schleicher tread 963
Schofield bias fabric shear 250
Schools, tire repair 1035
Schopper fabric tester 205
Schrader, Frederick 64-65
" dust caps 892-907-908
" inflating valves 880
" pressure gages 881-936
" pump connection 881-909
" tire patent 64
" Universal pressure gage 936
" " tire valves 887-893-897
" valve adapters 899
" " caps 894-897-899
" " deflating caps 908
" " insides 887-897-898-899-909
" " plug 897
" " repair tool 908
Schrader's Son, Inc., A. 893
Schroeder air release valve 879
Scientific American 35
Scleroscope, Shore 602
Scoops, weighing 106
Scott autographic tester 216
" cloth-rubber tester 214
" fabric-cord-rubber tester 218
" horizontal fabric tester 211
" single strand testers 215
Scrap boxes 89-90
" raw 117
" rubber dealers 1156
Sea Island cotton 171-173-174-175-182-183-184-185-661
" " " thread 180
Seabury vulcanizer 518
Sealo 1098
Sealomatic inner tubes 718
Seam construction essentials 131
Sears, Roebuck tread 967
Seasoning "green" stock 117
Sebring tread 954

Section cutter, Peerless 549
Security blow-out holder 927
" bolt, English 942
" tread 950
Seebach tread 963
Seiberling, F. A. 68
" cord fabric strip machine 480
" cycle tire wrapper 682
" friction calender 126
" multiple platen press 513
" State bead mold 318
" Stevens-State suits 68
Selecting tires 1002
Self-Healing Balm 1097
" inner tubes 718
Self-inflating bicycle tires 647
" inner tubes 724
Self-Sealing bicycle tire 654
Self-vulcanizing patches 1028
Semple collapsible core 350
Separating of plies 231
Serlin tread 967
Set test, automobile rims 845-849
Sewing machines for retreading 1139
Shaler vulcanizers 1020-1022-1023-1025
Shaler vulcanizing plants 1132
Shanks of tire fabric 1175
Shannon tread 963-964-967
Shaping devices, fabric 401
Shaw compression tube 723
" double ram heater press 490
" fabric impregnator and dryer 161
" heater press 488
" press vulcanizer 701
" self-healing compound 1097
" " " tube 719
" vulcanizer door lock 522
Sheath, Morgan & Wright tire 58
Shell, stock, calender 128
Shells, inner tube vulcanizing 771
Sheet, rubber making 121
Sheeting fabric with rubber 124
" mill 98
" rubber 87
Sheetings 181-186
Sherardizing furnace, New Haven 761
" inner tube poles 760
" method, Globe mandrel 761
Sherbondy mold 690
" puncture filler 1098
Shield, Tew mold 376
Shipping department 91
Shively, W. E. 257
Shock absorbability conditions 27-30
Shoe uppers of tire fabric 1175
" reclaim 110
Shoes of tire fabric 1175
Shop tests 595
Shore scleroscope 602
Shortcomings, pneumatic tire 32
Shrinkage, raw material 94
Shriver tread 958
Side-thrust test, airplane tires 274
Side wall compounds 112-278-1058
" " fabric 184
" " flexing 627
Sifters 88
Sifting machines 83-106
" pigments 88
Silk tire fabrics 172
Silvertown cord laying machine 466
" " tire 43-236-459
" rim tape fastening 810
" treads 948-1112
Simplex collapsible core 338
" demountable rim 803
" vulcanizer 1020
" " door 525
Singer tire sewing machine 1139
Single cure 537
" strand testers, Scott 215
Single Tube Automobile & Bicycle Tire Co..59-60
" " bicycle tires 647-648-649-650-651-655-660-661
" " pneumatic tire 56
" " Tire Assn. 58
" " " Co. 61
" " " patents 58
" " tires 41
" " Tires, Limited, ... 62
Sioco gas tire inflator 886
Sirdar tire 983
Six-Volt vulcanizer 1025
Six-Wheel trucks 248
Size anomalies, European tire 644
Sizes, large tire advantages 31
" British millimeter 642-643
" " tire standard 643
" Colonial tire 642
" different front and rear 632
" French or metric tire 641-644
" and inflation, tire 617
" millimeter tire 629-644
" pneumatic truck tire 262
" standard tire 638-640
" stock tire 657
" unnecessary tire 635
" vehicle wheel 617
Skidding 45
Skim-coating fabric 124
" compound 111
Skinner compound pump 873
" Pneu-Flator 869
Skiver-strip cutter, Nall-Tyler 741
" Western reliner 582
Skivers, inner tube (See Inner tube skivers)..774
Skiving machines 84-90
Sladden tire valve 895
"Slag in Road Building" 1153
Sleeves, inner tube 925
" outside tire 927
Slitter and rewinder, Cameron 583-742
Slitting fabric 87
" machines 87-89
" rubber 87
Sloper cabling machine 460
" cord flattener 460
" " tire core 483
" " twister 459
" Gray tape former 461
" improved cord tire core 484
" liner mold 580
" non-skid tread mold 383
" retreader 1117
" rewinding machine 460
" thread solutioning apparatus 165-459
" Thomas 236
Smith cycle tire builder 684
" tire fabric impregnator 156
" tire valve 902
" tread 952-960-962-963
Smooth treads 45
Smoothing rolls, C. & M. fabric 225
Snap-Lox dust caps 908
Snodgrass-Turpin tread studder 310
Soapstone cane 90
Society of Automobile Engineers 623-629-635-636-637-638-642
" " Automotive " (See S. A. E.) 30-271-658-842-843-846-848-849-853
Socket wrenches, rim 915
Soles of tire fabric 1175
Solid bicycle tire, sectional 647
" " tires 35-648
" tire prices 1206
" " vibration tests 618
" tires 27-28-30-48-49-54
" " change-overs to pneumatic 264
" " commercial vehicle 639-640
" " first truck equipment 247
" vs. pneumatic truck tire costs 257
Solution reclaiming processes 1158-1159-1160

Solutioning apparatus, Sloper thread 459
Solutions, rubber 132
Solvent recovery apparatus 161
" " " Bataille 158
" " " Devine 161
" " " Shaw 161
" storage 139
Sorting old tires 1164
Southwark forged steel molds 386
" goose neck bead press 325
" heater press 506
" mold closing press 515
" quick acting bead press 325
" rimming press 517
Soyer horizontal spreader 153
Spare tire carriers 911
" " cases 912
" " covers 912
" " holders 911
" " locks 911
" " trunks 913
" wheels 794-836
Sparrow, Thomas 646
Special tread 950
Specifications, airplane tires, S. A. E.....271-593
" " tubes, S. A. E.....273
" Government, accessories 1055
" " auto tire 500
" " bicycle tire 669
" " cord tire 271
" " fabric cord patch..1070
" " inner tube 733
" " " " repair.1029
" " motorcycle tire ...672
" " repair materials...1057
" " rubber cement 144
Speed, cord truck tire 48-49
" pneumatic tire 29-31
Speeds for power brushes 409
Spinning yarns 187
Spitler puncture plug 1026
Splash guards, mud 940
Splicers, inner tube 1132
Splicing, bicycle tires 662
" equipment 87
" inner tubes 731-1032
" machine, Van Note tube 781
" mandrels, inner tube (See Mandrels, inner tube splicing) 90-777-1032
" rod 662-663
" stands 90
" tubes 90
" vulcanizers, inner tube (See Vulcanizers, inner tube splicing).....777
Split laced bicycle tire 667-669
Spranger wire wheel 820
Sprayco tire painter 547
Spreader building 84-88
Spreaders 88-149-150
Burdin cord fabric 151
Devine 151
Hopewell enclosed 150
Soyer horizontal 153
Thoma calender 154
Turner, Vaughn & Taylor 152
Spreading fabric 84-87
" thread fabrics 186
Spring wheels 29
Springer reliner molding machine 581
Springfield tire detacher 917
Sponge rubber fillers (See Fillers, sponge rubber) 570
Square fabric weaves 178-183-185-189
" woven fabrics 178-189
Squires cord patch 1071
Stadelman, G. M. 627
Staggerd tread 45
Stalwart tread 952
Standard air bag 1128
" demountable wheel 835
Standard fabric strengths 182
" " testing methods 901
" Four tread 964
" Rim Co. 824
" tire fabrics 181
" Tire tread 960-965
" Universal rim 807-841-842
" Welding Co. 838-839-840
Standards, British tire 642-643
" " " and rim 643-653
" commercial vehicle tire.637-638-639-640
" S. A. E. tire 635-636-637-638-639
" " " and rim, 843-848-849-850-851-852-853
" truck tire 637-638-639-640
Standardization, British tire and rim.....853
" European tire 641
" folloe bands 842
" rim 825-841
" S. A. E. motorcycle tire.....657
" testing machines 20
" tire 654
Standley tire chains .....
Stands, building .....
" " early types 357
Adamson 35
Bridge jack 35
Iddon 35
Thropp 35
Williams 35
" building, modern types 359-1104
Akron 361
" " -Williams 361
Champion 364
Eau Claire 362
" " portable 364
Miller 364
P. I. W. 362
" finishing .....
Akron 366
P. I. W. 365
" rebuilding, Akron-Williams 366
" splicing 90
" treading, Akron 367
Stanley Cycling Club 646
Stansbury tread 961
Stanweld rims 807-816-829-839-841-842
" rim tool 929
Stapley tire pump 856
Stapling machines for retreading 1139
Star treads 951-953-955-959-961-965
" vulcanizer 1020
State, H. E. 842
" Will C. 68
" -Seiberling bead mold 318
" collapsible core 331
" core patent 68
" core suit 68
" tire shoe machine 413
Steam boilers 1137
" control 527
" generators 1137
" importance of dry 526
" jets, fire smothering 137
" separator, Stratton 532
Steel tire protectors 965
Stepney inner tube 717
" spare wheel 794-836
Stepped-out fabric repairs 1039-1042
Stepping down the fabric 1066
Sterling vacuum bar tread 950
Stevens 68
" bead clamp ring applier 352
" " fabric tearing device 322
" " forming machine 321
" bias cutter take-up 285
" flap machine 579
" portable buffer 542
" " cloth wrapper 452
" soft tire alarm 939

Stevens-Steele tire stripper 544
" tire casing machine 428
" " valve 902
" treads 957
Stewart engine-driven pump 863-865
" tire tool 917
Stiles-Yemiker collapsible core 332
Stillman-Brown wired tire 37-38
Stillman, G. F. 37
Stimson split rivet applier 311
Stitcher and tire builder, Kremer 433
Stitchers 29-90
" hand 1102
Stitching devices, fabric 401
Stocks-Bell leather tire cover mold 385
Stock bins 83
" racks 89-90
" room 90
" "green" 117
" shell, calender 128
Stone bruise, cord tire resistance to 233
" " repairs 1040
" demountable wheel 835
Storage, cement 135
" fabric 87
" gasoline 88-138
" naphtha 130
" racks, tire and tube 90
" rubber 87-88-95
" tires and tubes 90-998-1000-1002
" tube pole 90
Store room 104
Stowe core and cord anchorage 484
Straight-side bead construction 185
" " demountable rims, split 806
" " detachable bead 313
" " tire sizes 636-637-638
" " tires 46
" " " abroad 1198
Strain, air pressure 619
Strains, tire 606
Stratton steam separator 532
Strength-elasticity tester, Suter 219
" of fabrics 181-182-187
" test, rubber 605
Stress tire 620
Stretch test, rubber 605
Stretcher, Birch cloth 227
Stretching devices, fabric 401
" machine, Bridge fabric 287
" " Subers 158
String bead core former, Johnstone 318
Strip and band machines .....
Doughty fabric strip loom 192
Lake fabric band 192
Subers band coverer 197
" fabric strip 197
" cutters, rubber 292-740
Jelley-Hubbard 294
Pfister-Addyman 294
Sweeney 292
" winder, Blaisdell rubber 305
Stripped fabric preparation 1174
" tires 1174
Stripper, Stevens-Steele 544
Stripping bars 90
" bead fabric 1173
" lathes 84-90
" tables 89
" tire beads 1173
" tubes 90
Stronghold tires 47
Stronghold tread 951-952
Stud applier, Dunlop-Keegan 310
Studded leather treads 45-972
" rubber treads 980
" tread molds (See Molds, studded tread) 384
" treads 65
Studebaker Corporation 1196
Stultz tire building flanges 349
Stungo Q. D. demountable rim 829
Sturges studded tread 987
Subers-Bayne cord casing machine 482
" " " tire winder 467
" " thread coater 167
" " tubular cord fabric machine 482
" Lawrence A. 244
" automatic tubular fabric machine 482
" casing machine 196
" cord fabric 244
" fabric band coverer 197
" " " stretcher 158
" " strip machine 197
Substitutes 110
" for air 29
" " cotton fabrics 171-188
" " pneumatic tires 29
" rubber 114
Sulky tires 43-58
Sulphur 78-102-103-108-110-111-112
Sumatra rubber plantations 75
Superbar tread 951
Superintendent, production 606
Superior leather gage 599
Supply room cement can 141
Suter strength-elasticity tester 219
" yarn twist tester 220
Swabs, finishing 90
Swain cord laying machines 463
" fabric-less tire patent 173
Swan tread 964
Sweeney rubber strip cutter 292
Sweeting Cycle Co. 648
Swinehart cushion tire 800
" internal pressure mold 371
" rim attachment 800
" single tube clincher tire 41
" tire mold 377
" Tire & Rubber Co. 66
" tread 950
Syfers tread 961
Synthetic rubber tires 76
Syracuse tread 966
T. & W. paper and burlap wrapping machine 557
" " wrapping machine 556
Table racks 89
Tables 84
" building 67
" cooling 83-117
" cutting 89
" inspection 88
" joining 663
" rubber cutting 87
" " preparation 89
" stock 90
" stripping 89
" tube making 90
" wrapping 90
Tagliabue vulcanizer control system 528
Take-off reel, Nall 286
" up, fabric 181-182
" " Stevens bias cutter 285
Tandem axle construction 250
Tank, Bowser portable cement 143
Tanks, inner tube testing 1141
" inspecting 90
" portable cement 142
" pressure 1102
" soaking 83-95-96
Tapes 181-186
Tar road binders 1150
Taxicab tires 45
Taylor engine-driven pump 865
" tire molding press 515
Tearing device, Stevens bead fabric 322
" down for rebuilding 1075
Teel spare tire case 913
Temperature controllers 90-535
" gradual increase of 526

Temperature, importance of uniform 526
" rubber drying room 100
" vulcanization 1051
Thermometers 533
Ten Eyck engine-driven pump 867
Tenny tread 957
" Jr. tread 962-963
Tensile strength, moisture increases 205
" " relations, fabric 203
" " tests, fabric 202
Tension device, calender 127
" even, of cord tires 233
Tensioning devices, fabric 401
Terrell tread 967
Terweldo mud shoe 991
Test specimens, fabric 202
Tester head, Bureau of Standards 210
Testing devices 206
" division, laboratory 596
" fabrics, methods 87-182
" inner tubes 732
" instruments 206
" machines, crimp .....
filler-warn 212
Gadsby-Walen 213
" " fabric .....
Avery 207
Bureau of Standards 210
Jury autographic 220
Schopper 208
Scott autographic 216
" cloth-rubber 214
" fabric-cord-rubber..218
" horizontal 211
standardization 209
Suter strength-elasticity..210
types 206
" " miscellaneous .....
folding endurance 204
Scott cord-fabric-rubber..218
" single strand 215
Suter yarn twist 220
" " rubber 601
head, special rubber testing 602
Jolly spiral spring balance 605
pendulum type 601
Scott autographic 216
" cloth-rubber 214
" fabric-cord-rubber .218
" hand-operated 214
Shore scleroscope 603
Suter 219
Venturi recording pen...603
Widney resiliometer 603
" " tire 590-606
Baker 607
Berlin-Frankfurter 611
British 612
Duryea resiliometer 611
dynamometer 591
Firestone dynamometer..615
Gates testing track.....610
Hartford 608
Michelin vibration.....613
Palmer 609
" resiliometer 612
power loss 615
pulley 607
Thropp 608
Veritas road belt.....610
" tire cords 602
" " fabrics 200
" track, Gates tire 610
Tests, automobile tire fabric 203
" bead wires and cables 596
" Bureau of Standards fabric 203
" compounding ingredients 596
" crude rubber 596
Tests, fabric 596
" " classes of 200
" " tensile strength 202
" goods in process 595
" rim 845-849
" rubber 605
" tire 273-590-613
Tetmechy puncture filler 1037
Tew cord carcass form 435
" " impregnator and dryer 169
" flat tubular cord machine 462
" mold shield 370
" rubberized hollow cord machine 169
Texture, fabric 181-183-184
Thénant, V. C. 1175
Theory, inner tube 706
" pneumatic tire .....
Thermoid-LaFleur tread 968
" tire reinforcement 579-924
" treads 951-961
Thickness gages (See Gages, thickness).....599
Thoma calender spreader 154
Thomas, A. J. .....
" Amos W. .....
" tire patent 43-54-
Thompson aerial wheel .....
" nest mold 694
" Robert William 34-49-57-69-
" tire patents 34-35-36-37-49-54
" tread handling device 804
Thomson tire valve 837
Thordarson paper cutter and winder.....551
Thread bead fabric 185
" broken in fabrics 187
" cabling 186
" coaters 164
Bayne-Subers 167
Good Brothers 164
Latour-Capelle 167
Reichelt-Helbing-Nienaber 164
Sloper 167
" fabric, calendering 188
" " tires 229
" " yarn 183
" fabrics 181-185-186-224
" " spreading 186
" impregnators (See Thread coaters)....164
" knotted in fabrics 187
" layer, Huestis 681
" micrometer, Lowinson 221
" Sea Island cotton 183
" solutioning apparatus, Sloper.....165-
" tires, Palmer .....
" winder, Rucker .....
Three-in-One valve repair tool .....
" -roll calender, standard 118-
Thropp-DeLaski tire builder .....
Thropp, P. D. .....
" & Son's Co., William R.....
" bead adjusting device .....
" bobbin winder .....
" heater press .....
" improved collapsible core .....
" mold suit .....
" repair vulcanizer .....
" tire core .....
" " fabric impregnator .....
" " press .....
" " tester .....
" tread mold .....
" stand .....
" wrapping machine .....
" wrapper and unwrapper .....
Thropp's Sons Co., John E.....
Tillinghast, Pardon W. 42-56-58-
" single tube tire 42-56-57-58-64-
" Tire Association 43-59-649-
" " patent suits .....
" " patents 43-56-57-58-59-60-
Tinsman, E. A. 1175

Tire alarms 905
" Balm 1098
" casing machines (See Tire building machines)
" consumption, automobile 1183
" demand, future 1186
" " original equipment 1181-1185
" " replacements 1183-1185
" -Doh 1027
" Dough 147
" industry today 1176-1178
" irons 915
" Life 567-578
" machine drum, Universal 128
" manufacture, preliminaries 91
" plant layout 80
basement 87-91
building room 84
calender room 83
cement mixing room 84
chutes 91
compounding room 87-104-106
curing room 84
electric power 81
elevators 91
emergency room 84
finishing " 84
first floor 83-91
heat 81
hospital 84
hydraulic plant 84-87
laboratory 91
light 81-83
location 81
maintenance department 91
mill lines 83-91
mill room 83-113
plans 82-85
power 81
receiving department 91
repair department 91
routing materials 91
second floor 84-91
shipping department 91
spreader building 84
superintendent's office 91
third floor 84-91
tube-room 84
washing room 83-87-95
water supply 81
" Rate Book 1197
" and Rim Association..636-638-845-849-851-853
" -Sav 1027
" scrap grades 1164-1173
Tireoid 1093-1098
Tires carry more than steel rails....1176
" in use 1132
" synthetic rubber 76
" valveless 891
Tiresele 1098
Toledo tire scale 549
Tong-em-on 1023
Tongs, Grosvenor tire core 351
Tools, repair 1101
" rim 916
" small factory 88-89-90
" tire 914
Goodyear motorcycle rim gage....943
jacks, automobile 915-916-921
pressure gages 916-936
puncture finders 939
rim gages 916-943
tube deflators 942
" tire chain 992
" " valve repair 908
Towne tread 959
Traction plate dimensions, felloe band....853
" tire 44-45-46
Trade marker, fabric, P. & W....191
Trailers, truck 1203
Transfer carriages, vulcanizer 84
Transfer printing, Sarco 785
Transformers electric 81
Transportation economies, truck tire 253
Traved non-skid device 990
Traver blow-out patch 925
Trautwein tread 965
Trautvetter bias fabric loom 288
Tread applying 1078
" " machines 291-301
Brucker tread roller 303
Eccles 301
Hibner cementing machine..303
Hoyt tread centralizer....302
Thompson tread handler....304
Williams 301
" band buffing 408
" building 1078
" " machines 294
Birmingham 296
Crook 295
Gordon 296
Pfister-Addyman 294
" calenders 298
Hanna 300
Kearns 299
Olier 298
Troester 298
" cementing machine, Hibner 303
" centralizing device, Hoyt 302
" compound 113
" cutting back 1066
" design, non-skid 84
" designs, principal 949
" drums, steel 701
" formers, Ramsbottom-Turner 382
" gum, camel back 1081
" handling device, Thompson 304
" making 89
" " machinery 291
" molds (See Molds, tread) 377
" removal for rebuilding 1076
" riveter, German 306
" riveting machine, leather 1102
" rollers 1135
" rolling device, Brucker 303
" splicer, Nall 1172
" stock compounds 1058
" strip dimensions 1079
" studder, Turpin-Snodgrass 310
" trimmer, Jelley-Hubbard 294
Treading stand, Akron 367
Treads, anti-skid 291
" Bailey "Wont-Slip" 45
" cord tire 45
" corrugated rubber 646
" fabric and fiber 986
" flat 43
" Keaton non-skid 66
" Midgley non-skid 65
" Nobby 45
" non-skid 45-46-945
" puncture closing 1088
" reclaiming leather 1163
" repairing 1038
" ribbed 43
" smooth 45-291
" Staggerd 45
" steel-studded leather 45
" studded 65
" " leather 972
" " rubber 980
Trenton tube testing tank 1141
Trident detachable rim 817
Trigwell, J. R. 54
" tire patent 54
Trimmer, Midgley flap 580
" tread, Jelley-Hubbard 294
Trimmers, bead (See Bead trimmers)....
Trimming tires 90
Triple P. Compound 1093-1098

Triple tire pump 861
" tires 45
Triplex cement mixer 185
" inner tube 713
Tripoli 109
Troester tire tread calender 298
Tropical tread 953
Truck industry, growth of 49
" loads, weighing 943
" production 1181
" registration 1182
" tire advantages, cord 48
" " design 45
" " felloe bands 853
" " rims 830
" " standards 637-638-639-640
" " valves 887
" " vulcanizers 1124
" tires applying 833
" " British 644
" " " standards 643
" " pneumatic 639-640
design for 254
development of 261
introduction of 247
practicability of 260
road speeds of 254
" " solid 639-640
" trailers 1203
Trucks
accomplishment with pneumatics 255
design for pneumatics 254
development 247
eight-wheel 248
service capability 265
six-wheel 248
solid tires 247-257
tire costs 257-259
tire equipment 259
" vulcanizer transfer 779
Trump, Elmo H., tire building patent 406
" tread 963
Trunks, spare tire 913
Trusty tread 949
Tube buffing 90-408
" and casing machine, Banner 439
" curing 90
" deflators 942
" filler, cement 136
" making 90
" " equipment 84
" " tables 90
" measurements, airplane tires 272
" plug pincers 915
" pole storage 90
" poles 90
" splicing 90
" stripping 90
" tests, airplane, S. A. E. 273
" vulcanizers 84
" weights, airplane tires 272
Tubes, butt-ended bicycle 649
" filling with cement 136
Tubing machines 83-84-87-89
" " power for 83
" " Royle 737
" " standard 736
Tubeless bicycle tire 655
Tubular cord fabric machines
Bayne-Subers 482
Subers Automatic 482
" " machine, Tew flat 462
" fabric machines 193
DeLaski circular loom 193
DeLeeuw circular braider 196
Dickinson loom 197
Dunkerley-Arnold braider 198
Subers band coverer 197
" casing machine 196
" fabric strip machine 197
Tulreyhouse & Anderson puncture fluid 109
Turnbuckle, Ford 81
" Moseley 80
" rim-fastening 6
Turner detachable rim 81
" -Ramsbottom tread formers 3
" Vaughn & Taylor spreader 15
Turpin-Snodgrass tread studder 5
Tuscora treads 6
Twentieth Century repair bag 112
" " tire protector 97
Twin inner tube 71
" tires 4
Twisting yarn 18
Twitchell air gage 93
Two-in-One vulcanizer 11
Twombly foot pump 8
Tyler-Goodyear tube machine 73
Tyler-Nall calender tension device 12
" " strip cutter-skiver 74
" " tire bead machine 31
Tyrian tread 94
Under-tiring cars 65
Underwood, H. B. 3
Uniformity tread 9
United Electric fabric cleaner 8
" Q. D. demountable rims 8
" Rim Co. 841-8
U. S. M. C. bench cans 14
U. S. air compressor 87
" Army 669-672-832-887-8
" " cement specifications 14
" Bureau of Mines 118
" Chain treads 950-95
" Compression inner tube treads 9
" Department of Agriculture 115
" Government fabric cord patch specifications 107
" " inner tube repair specifications 102
" " specifications, accessories 105
" " " auto tire ..5
" " " repair material 1
" Motor Transport Corps 1
" Naval Advisory Board 8
" Nobby tread 94
" Royal cord tire 24
" " tread 9
" Rubber Co. 38-41-43-59-60-62-6
" Tire Co. 67-8
" " exports 11
" " treads 9
United & Globe tread 9
Universal calender stock shell 12
" demountable clincher rim 8
" engine-driven pump 6
" Rim Co. 8
" (Baker) rim patent 8
" tire machine drum 12
" " protector 9
Unwrapper, Ross inner tube 7
Unwrapping machines, cloth 4
DeLaski-Thropp 4
Olier 4
Raber 4
Thropp 4
Utility impulse pump 8
Vacuum dryer 78-7
" pumps 7
Vail-Osgood inner tube 7
Valve accessories 9
" adapters, Schrader 8
" bases, applying 1
" caps, Schrader 894-89
" checks 8
" deflating caps, Schrader 8
" dust caps 907-9
" equipment, European 6
" Fisher, reducing 8

Valve hole sizes, automobile rims 844-848
" " " motorcycle " 844
" inserter 90
" insides 664-909
" insides, Schrader 887-897-898-899
" leakage, measuring 616
" leaks 906
" nut tighteners 90
" " " Gillette 785
" " " Allen 785
" plug, Schrader 897
" repair tools 908
" Schrader air release 879
" stem, air 664
" troubles 887-1017
" Vinet 794
Valving bicycle tires 663
" inner tubes 731
Valveless tires 891
Valves, airplane tire 273-893-897
" bicycle tire 664-887
" deflation signal 905
" motor tire 887-889
" motorcycle tire 894
" offset tire 267
" over-inflation release 904
" pneumatic tire 887
" pressure indicator tire 903
" pump base inflating 880
" springless tire 900
" truck tire 266-887-893
Van Note tube splicing machine 781
Vargyas tread 955
Vashinder tread 955
Vats 88
" soaking 83-95-96
Vaughn calender roll adjustment 124
Vehicle tire inflation 629
Velocipede, introduction of 35
Velvet tread 951
Venn " 963
Venturi recording pen 602
Veritas road belt 610
" tire 610
Vertical cement churn 135
Vey inner tube wrapper 767
Vibration, annihilation of 27
Victor anti-skid 990
" bicycles 649
" felt tread tube 709
" Springfield tread 951
" treads 954-961
Vim Special bicycle tire 653
Vincent fabric shaping device 401
" tire builder 410
" vulcanizing press 509
Vinet detachable rim 794-798-799
" rim patent 838
" tire valve 794
Vital 54
Vitalic tread 950
Von Vargyas and Vavora tread 954
Vuitton sac chauffeur 914
Vulcanization automatic control of 527
" bicycle tires 678
" changes wrought by 102
" control 526
" " devices (See Control devices, vulcanization) 528
" hints, repair 1051
" temperature 1051
Vulcanizer and mold, Dykes reliner 581
" Andrus spot 545
" disk compound 1024
" doors 521
Adamson self-sealing 521
Allen quick-opening 523
Barder 524
Bridge-Akron-Williams 523
German closing device 521
Vulcanizer doors (Continued)
Shaw lock 522
Simplex quick-opening 525
Williams self-sealing 521
" French steam 1113
" Frost leather-to-rubber 308
" Marshall flap 580
" -mold, Roberts tube 756
" transfer carriages 84
" " trucks 770
Vulcanizers and presses 487
" casing and tube 1131
" Chamberlain cycle tire 1111
" cycle tire press 694
Adamson mold press 701
Doughty expansible mold vulcanizer 697
" former-vulcanizer .694
" tube press 698
" hand press 696
" vulcanizer-mold 695
Hardy press vulcanizer 697
Shaw " " 701
" emergency 1019
Vulcanizers, horizontal 90-518-769
Gammeter press 519
McLeod 520
rebuilding 1082
retreading 1106
Seabury 519
" inner tube 769
" " " repair 1129
" " " splicing 777
Allen 779
" expanding core 783
"H. F." jointless joiner 780
Kremer 782
" inside patch 1050-1124
" kettle 1104
" press (See Presses, vulcanizing) 509
" retreading 1064
" sectional casing 1050
" " cavity 1119
" truck tire 1124
" tube 84
Vulcanizing 78-90
" bag, Johnson-Gammeter 345
" blow-out patches 588
" cement 143
" cores, (See Cores, building and vulcanizing) 330
" fabric repairs 1050
" inner tubes 729
" jacket, Midgley 372
" molds (See Molds, internal pressure; Molds, tire).....
" " inner tube 771-772
" presses 509
" " inner tube 771
" shells, " " 771
" the casing 537
Vulcanizit 1027
Vulcar 1020
W. M. tread 949
W-S-M rimming press 516
Waddington nest mold 692
Wadsworth wire spiral machine 309
Wagenhorst Q. D. demountable rim 827
Wages, foreign conditions 1193
Wagner-Horton collapsible core 341
Wais tire armor 934
Wald tube deflator 942
Walen-Gadsby crimp tester 212
Walker non-creeping chains 990
" tire band 977
Wanklyn puncture filler 1098
Warming rubber 89
" mills 83-87
War Department tube repair 1029
" Industries Board 1205
Warner inflating valve 881

Warp cords 185
" filler crimp tester 212
" yarns 184
War Service Committee, Rubber Industry 144-175-274-636-657-669-672-843
Washers, cracker 83
" crude rubber 78-95
Washing " " " 78-87-95
" room, tire plant 83
" tires 998
Washington tread 960
Waste tire rubber grades 1164-1173
Water content of fabric 181
" pressure test for airplane tires 274
" supply, tire plant 81
Watkinson puncture fluid 1096
Wax in cotton 171
Wear Well tread 963
Wearing quality tests, rubber 605
Weaves, tire fabric
constrictive 178
leno 184
mock leno 188
non-constrictive 178
plain 183
square 178-183-185-189
types 176
Weaving faults, correcting 189
" tire fabrics 187
Web tire for electric vehicle, Palmer 236
Weber & Clemen puncture fluid 1093
Weed chain jack 921
" " tire grips 989-990
" tire chain pliers 993
Weeks tread 960
Weftless fabric loom, Bourdin 478
Weighing fabric 87
" machines, compound 105
" rubber 87
" scales, compound 104
" " 88-89-90
Weights, airplane tires 272
" fabric dry 204
Weintraub-Schnorr puncture fluid 1096
Weizer's E. Z. rim tool 921
Welch bicycle tire 648
" Charles Kingston ..36-49-50-55-70-707-810
" -Dunlop tire patent 788-806-810
" tire fastening 36-49-50
" " patents 36-49-50-51-52-53-55-70
Wells leak alarm 939
Welton collapsible core 341
" heater press 503
" interlocking collapsible core 337
" tire wrapper 457
" serial numbering machine for mold strips 391
Western reliner skiver 582
" retreader 1112
" tread roller-peeler 1136
Westbury (Goodrich) detachable rim 818
Westower tread 954
Whalen tire making machine 418
" tread 956
Wheel alinement 1008-1015
" braces 915
" sizes 638
" " automobile 617
" " bicycle 617
" " vehicle 617
Wheeler tire core cleaner 356
" " mold " 390
Wheels, airplane landing 846
" demountable 884
" Disteel 818
" economy of larger 618
" Kelsey steel felloe 807
" spare 836
" specifications, airplane 270
" wire 819
Wheels, wire motorcycle 819
" wood 837
" " felloe dimensions 846
Whipple tread 966
Whistler tire valve 895
Whitehead studded tread mold 384
Whiting 78-109-110
Whittlesey, Charles B. 624-842
Wick tube vulcanizing mold 773
Wicks' tread 958
Widney resiliometer 603
Wiener tread 961
Wildman tread 964
Wilkinson cavity retread mold 1119
Williams Stores, Inc., Charles, tread 964-966
" cloth wrapper 446
" nest mold 963
" open cure mold 373
" rim tool 915
" stand 389
" tread applier 301
" treads 960-962-965
" tube deflator 1141
" vulcanizer door 521
Wilson tread 966
" vacuum tread 952
Winders, bobbin (See Bobbin winders).....452
" paper 551
Winding machines, cord tire .....
Bayne-Meredith 470
" -Subers 467
Denman 473
Windshield, Goodrich airplane wheel 269
Wingfoot highway express 256
Wing tread 955
Winter storage of tires 1002
Winton 41
Wire bead core, braided 195
" " " machine, Gillette 323
" " former, Brucker 324
" " tests 596
" beads, making braided 314
" braided bead 313
" breaker fabric 172
" landing wheels, airplane 846
" spiral machine, Wadsworth 309
" wheel brush, Osborn 406
" wheels 819
" " motorcycle 819
" winder, Rousillon 309
Wired-on tire rims 788-790
" tires 37
" tread maker, Henry 309
Wisconsin tire protector 979
Witsaman tube rolling table 755
Wizard vulcanizer 1020
Wolber press vulcanizer 510
Women in tire making 1210
" " tube " 732
Wonder tube deflator 942
Wood-Milne collapsible core 343
" " foot pump 860
" mold closing press 514
" rubber tire valve 902
" wheels 837
Woods tire valves 897
Woodward impulse pump 871
Woodworth detachable tread 976
" inner tire sleeve 925
" tread 951
" trouble-proof tire 995
Work inner tube machine 745
World tire tread 964
World War 77-1160-1210
Worm tread 950
Worn-out tires, what becomes of 1156-1164
sorting 1164
beading 1163
Wrapped tires 537
" tread process 67

Wrapper Forsyth endless tire 680
" Gray endless tire 683
" Seiberling cycle tire 682
Wrappers, inner tube (See Inner tube wrappers) 765
" paper 551
Wrapping, cross 90
" lathe, Akron-Williams 766
" lathes 84
" machines 90
" " bead (See Bead wrapping machines) .....
" " cloth 443
Bridge 449
" open gap 447
Decauville 443
De Laski-Thropp 447
Kuentzel 445
Midgley 452
Miller 443
Nuttall-Bridge 452
Olier 449
Raber 445
Stevens portable 452
Thropp 450
Welton 457
Williams 446
" machines, paper 551
Kuentzel 455-555
Midgley 558
Miller 555
Pierce 553
" improved 553
Terkelsen & Wennberg 556
Thropp 67
T. & W. paper and burlap.....557
Welton 457
" tables 90
" tire 90-541
Wray foot pump 860
Wray pressure register 878
Wrenches, rim 915
Wright-Parker perforator 703
" tire valve 900
Y. S. K. collapsible core 335
Yale tire locks 912
" tread 961
Yankee tire pump 859
Yarn, camels' hair 180
" cloth quadrant, Lowinson 220
" elastic limit of 180
" filler 184
" impregnator, Denman 168
" impregnators 164
" ply 187
" single 187
" spinning 187
" stretch 182
" twist tester, Suter 220
" twisting 187
" twists 181
" warp 184
Yemiker-Stiles collapsible core 332
Yockey treads 967
Younie demountable rim 801
Young puncture fluid 1095
" removable core 331
" tube vulcanizing shell 771
Zee-Zee tread 951
Zeger tread 962
Zenith vulcanizer 1022
Zimmerman tire painter 546
Zinc oxide 78-103-109-111-112
Zonta tire treads 962
Zubers patent tire filler 572
Zuhl reclaiming process 1160
Zwebell cavity retread mold 1116
" retreader 1116
Zwisler inner tube wrapper 767